Back to Library

Construction Manual

M 41-01

Washington State Department of Transportation
Construction Office
Transportation Building 47354
Olympia, WA 98504-7354

Alternate Formats: Persons with disabilities may request this information be prepared and supplied in alternate formats by calling the Washington State Department of Transportation ADA Accommodation Hotline collect 206-389-2839. Persons with hearing impairments may access Washington State Telecommunications Relay Service (TTY) at 1-800-833-6388, or Tele-Braille at 1-800-833-6385, or Voice at 1-800-833-6384, and ask to be connected to 360-705-7097.

Additional copies may be purchased from:

Washington State Department of Transportation
Directional Documents and Engineering Publications
PO Box 47408
Olympia, WA 98504-7408

Phone: 360-705-7430
Fax: 360-705-6861
E-mail: lovem@wsdot.wa.gov

This publication is also available on CD-ROM or via Internet on the WSDOT homepage at http://www.wsdot.wa.gov/

Foreword

This manual is provided for our construction engineering personnel as a convenient guide to the objectives, procedures, and methods for construction administration of Washington State transportation projects. This manual contains two kinds of instructions depending on the subject matter and the nature of the work. In one case, where the activity is the inspection of contract work that is critical from a structural or operational viewpoint, the instructions prescribe detailed methods and procedures designed to assure the objective of a safe and adequate finished product. In other cases, typically in the areas of documentation and payment, the instructions are limited to describing the necessary objectives of the work without specifying the methods or procedures. The *Construction Manual* is intended as a reference book that is consistent with the language and intent of the *Standard Specifications*. In order to use this reference effectively, it is essential that the user have a thorough understanding of the contract, contract plans, contract provisions, and *the Standard Specifications*, as well as this manual.

Where specific methods and procedures are not included, the intent of the manual is to provide the project staff with a statement of the outcomes required and to allow the Region Construction Management and the Project Engineer to devise procedures accordingly. Future work will develop a companion resource of good practices and recommended procedures for the consideration of these managers. The manual provides basic guidance for identifying policies or laws that affect the construction administration work, however, the manual generally does not interpret these policies or laws. Compliance with policies, laws, and regulations is the duty of the Project Engineer, who may call on others, especially those authorized to enforce laws and regulations, at any time for assistance. In order to respond to the many situations that may arise on different contracts with different types of work, the guidance provided by this manual is general in character and is not to be construed as replacing, modifying, or superseding any of the provisions of the contract, contract plans, contract provisions, or *Standard Specifications.*

The tone of this manual is noticeably different from previous editions in that it affirms the philosophy of decision making at the appropriate levels. With that decision-making authority comes responsibility to make good decisions.

Comments about the manual are always welcome and will be considered in future updates.

JOHN F. CONRAD
Assistant Secretary for
Field Operations Support

Metrication

Throughout this manual, English units are used as the primary unit with Metric (SI) units following in parentheses. Metric conversion of English units is generally in accordance with ASTM E 380 and AASHTO guidelines. In some cases, metric conversion has been rounded to a practical value rather than a precise conversion.

Contents

Chapter 1 Administration

Chapter 2 Earthwork

Chapter 3 Production From Quarry and Pit Sites and Stockpiling

Chapter 4 Bases

Chapter 5 Surface Treatments and Pavements

Chapter 6 Structures

Chapter 7 Drainage Structures, Storm Sewers, and Conduits

Chapter 8 Miscellaneous Construction

Chapter 9 Materials

Chapter 10 Documentation

Chapter 11 Forms

Index

Page

1-1 General Information 1-1
1-1.1 Purpose and Scope of Manual 1-1
1-1.2 Definition of Terms 1-1
1-1.3 WSDOT Organization and the Construction Program 1-1
1-1.3A Legislature 1-1
1-1.3B Transportation Commission 1-1
1-1.3C Secretary of Transportation 1-1
1-1.3D Deputy Secretary for Operations 1-1
1-1.3E Assistant Secretary for Field Operations 1-1
1-1.4 Olympia Service Center Construction Office 1-2
1-1.4A State Construction Engineer 1-2
1-1.4A(1) Administration 1-2
1-1.4A(2) Roadway 1-2
1-1.4A(3) Bridges 1-2
1-1.5 Materials 1-5
1-1.6 Region Organization 1-5
1-1.6A Regional Administrator 1-5
1-1.6B Regional Construction Manager 1-5
1-1.7 Relationship With Other Agencies 1-5
1-1.7A Federal Highway Administration 1-5
1-1.7B Local Agencies 1-5
1-1.7B(1) Project Engineer Administering Local Agency Project 1-5
1-1.7B(2) Local Agency Administering Its Project on State Right of Way 1-5
1-1.7C Other Federal, State, and Local Agencies 1-5
1-1.8 Relating to the Public 1-6
1-1.9 Safety 1-6
1-1.10 Archaeological and Paleontological Salvage 1-6
1-1.11 Construction Work in International Boundary Strip 1-7

1-2 Contract Administration 1-7
1-2.1 Proposal and Award of Contract 1-7
1-2.1A Contract Proposal and Bids 1-7
1-2.1B Award and Execution of Contract 1-7
1-2.1C Preconstruction Meetings, Discussions 1-8
1-2.2 Project Engineer’s Relationship and Responsibilities 1-13
1-2.2A Assignment 1-13
1-2.2B Responsibility as a Public Official 1-13
1-2.2C Relationship With the Contractor 1-14
1-2.2D Relationship With Other Government Agencies 1-14

	Page
1-2.2E Relationship With Public and Private Utilities	1-16
1-2.2F Responsibility for Coordination of Railroad Agreements	1-16
1-2.2G Responsibility for Railroad Encroachment Insurance	1-16
1-2.2H Responsibility for Coordinating Work With Other Contracts	1-16
1-2.2I Responsibility for Enforcement of Safety and Health Requirements	1-17
1-2.2I(1) General	1-17
1-2.2I(2) Precontract Preparation	1-17
1-2.2I(3) Preconstruction Duties	1-17
1-2.2I(4) The P.E.'s Role in Safety on the Project	1-17
1-2.2I(5) Pedestrian Safety	1-18
1-2.2J Responsibility for Environmental Considerations	1-18
1-2.2K Responsibility for Posting Required FHWA and State Labor and Industries Job Site Posters	1-18
1-2.2L Responsibilities When Working on Tribal Lands	1-19
1-2.3 Construction Traffic Control	1-19
1-2.3A Public Convenience and Safety	1-19
1-2.3B Public Information and Customer Focus	1-19
1-2.3C Work Zone Traffic Control	1-20
1-2.3C(1) General	1-20
1-2.3C(2) Traffic Control Management	1-20
1-2.3C(3) One-Way Piloted Traffic Control Through Construction Zones	1-20
1-2.3C(4) Construction and Maintenance of Detours	1-21
1-2.3C(5) Road/Ramp Closures	1-21
1-2.3C(6) Traffic Control Plans	1-21
1-2.3C(7) Conformance to Established Standards	1-22
1-2.3C(8) Construction Signs	1-22
1-2.3C(9) Flaggers, Spotters and Traffic Control Labor	1-23
1-2.3C(10) WSP Traffic Control Assistance	1-23
1-2.3D Speed Reductions	1-23
1-2.3E Records of Construction Signing, Accidents, and Surveilance	1-24
1-2.3F Resources for Traffic Control and Work Zone Safety	1-24
1-2.4 Application of Contract Provisions, Plans, and Specifications	1-25
1-2.4A Construction Contracts Information System (CCIS)	1-25
1-2.4B Order Lists	1-25
1-2.4C Changes in the Work	1-25
1-2.4C(1) Types of Changes	1-25
1-2.4C(2) Equitable Adjustment	1-29
1-2.4C(3) Approval of Changes/Checklist	1-31
1-2.4C(4) Delegation of Execution Authority	1-32
1-2.4C(5) Verbal Approval	1-33
1-2.4C(6) Documentation	1-33
1-2.4C(7) Minor Changes	1-34

Page

1-2.4D Force Account 1-36
1-2.4E Differing Site Conditions (Changed Conditions) 1-40
1-2.4F Termination of Contract 1-40
1-2.4G Subletting Portions of the Contract 1-40
1-2.4H Contractors' Shop Plans and Working Drawings 1-41
1-2.4I Relief of Responsibility for Maintenance and Third Party Damage 1-41
1-2.4J Protested Work 1-41
1-2.5 Contract Time 1-41
1-2.5A General 1-41
1-2.5B Working Day Charges 1-42
1-2.5C Suspension of Work and Delay 1-43
1-2.5D Extension of Time 1-43
1-2.5E Substantial Completion 1-44
1-2.5F Date of Physical Completion 1-44
1-2.5G Liquidated Damages 1-44
1-2.5G(1) Contract Time Liquidated Damages 1-44
1-2.5G(2) Miscellaneous Liquidated Damages 1-45
1-2.5H Completion Date 1-45
1-2.6 Enforcement of Wage Rate Requirements 1-48
1-2.6A General Instructions 1-48
1-2.6B Monitoring of State Requirements 1-48
1-2.6C Enforcement of Federal Prevailing Wage Provisions 1-49
1-2.6C(1) Federal Prevailing Wage Rates 1-49
1-2.6C(2) Certified Payroll Inspection 1-49
1-2.6C(3) Employee Interviews 1-50
1-2.6C(4) Complaints 1-50
1-2.6C(5) Federal Prevailing Wage Violations 1-50
1-2.6C(6) Department of Labor Investigation 1-51
1-2.6C(7) Fraud Notice Poster 1-51
1-2.7 EEO, D/M/WBE and Training 1-51
1-2.7A Overview 1-51
1-2.7B EEO (Federally Funded Projects) 1-51
1-2.7B(1) Prompt Return of Retainage to All Subcontractors 1-51
1-2.7C EEO (State Funded Projects) 1-52
1-2.7D EEO (Federally Assisted Projects) 1-52
1-2.7E Minority and Women Owned Business Enterprise (MBE, WBE) 1-53
1-2.7F Disadvantaged Business Enterprise (DBE) 1-53
1-2.7F(1) GSP Includes Voluntary Goal, or Does Not Have a Goal 1-53
1-2.7F(2) GSP Includes Condition of Award (COA) Goal 1-53
1-2.7F(3) Additional Execution Documents 1-53
1-2.7F(4) DBE Reporting 1-53
1-2.7F(5) On Site Reviews 1-53

Page

1-2.7F(6) Changes to the Condition of Award (COA) 1-54
1-2.7F(7) Substitution 1-54
1-2.7F(8) Condition of Award (COA) Change Orders 1-54
1-2.7G On-the-Job Training (OJT) 1-54
1-2.7G(1) On-the-Job Training Special Provisions — General 1-54
1-2.7G(2) OJT Required Reports 1-54
1-2.7G(3) Payment for "Training" 1-55
1-2.8 Control of Work 1-55
1-2.8A Auhority of the Project Engineer 1-55
1-2.8B Contractor's Equipment, Personnel, and Operations 1-55
1-2.8C Defective or Unauthorized Materials or Work 1-56
1-2.8C(1) Defective Materials 1-56
1-2.8C(2) Defective or Unauthorized Work 1-57
1-2.8C(3) Material Acceptance by Manufacturer's Certificate 1-57
1-2.8D Contractor Submittals 1-58
1-2.8E Statement of Materials and Labor, Form FHWA-47 1-58
1-2.8F Contractor's Performance Reports 1-58

1-3 Estimates and Records 1-58
1-3.1 Estimates 1-58
1-3.1A General 1-58
1-3.1B Progress Estimates 1-58
1-3.1B(1) Payment for Material on Hand 1-59
1-3.1B(2) Payment for Falsework 1-59
1-3.1B(3) Payment for Shoring or Extra Excavation 1-60
1-3.1B(4) Payment for Surplus Processed Material 1-60
1-3.1B(5) Liquidated Damages 1-60
1-3.1B(6) Credits 1-60
1-3.1B(7) Railroad Flagging 1-61
1-3.1B(8) Payment for Third Party Damages 1-61
1-3.1B(9) Withholding of Payments 1-61
1-3.1C Final Estimates — Regions 1-62
1-3.1D Final Estimates — Olympia Service Center 1-62
1-3.1D(1) Final Estimate Claim Reservations 1-63
1-3.1D(2) Unilateral Acceptance of Final Estimates 1-63
1-3.1E Supplemental Final Estimates 1-63
1-3.1F Retained Percentage 1-63
1-3.2 Final Records for Projects Constructed by Contract 1-64
1-3.3 Disputes and Claims 1-64
1-3.3A Claims By the Contractor 1-64
1-3.3A(1) Disagreement, Dispute, Protest 1-64
1-3.3A(2) Claims 1-64

Page

1-3.3A(3) Legal Filing 1-65
1-3.3A(4) Final Contract Voucher Certification 1-65
1-3.3B Claims Against the Contractor — Damage 1-65
1-3.3C Claims Against the Contractor — Money 1-66
1-3.3D Claims Against Officials and Employees 1-66
1-3.4 Stewardship 1-66

1-4 Utility and Railroad Relocation 1-66
1-4.1 Work Performed Under Utility Agreements 1-66
1-4.2 Work Performed Under Railroad Agreements 1-66

1-5 Surveying 1-67
1-5.1 Site Surveying 1-67
1-5.1A Permanent Monuments 1-67
1-5.1B Property Corner Monuments and Markers 1-67
1-5.1C Alignment Monumentation 1-67
1-5.2 Construction Surveying 1-67
1-5.2A Surveying Provided by the State 1-67
1-5.2B Contractor Surveying 1-67

1-6 Inspection of Course Thicknesses 1-68

1-1 General Information

1-1.1 Purpose and Scope of Manual

This manual is published by the Olympia Service Center Construction Office primarily as a resource for construction engineering personnel. It is intended as a convenient guide to requirements for Washington State transportation projects. The manual recognizes established standards and describes accepted engineering practices. The guidance provided by this manual is intended to identify desired results, establish standardized requirements, and serve as a general guide for the administration and construction of transportation-related contracts.

Construction engineering staff responsible for work on construction contracts will want to be familiar with the guidance and instructions included in this manual. The guidance presented by this manual is intended to complement the requirements of the *Standard Specifications* and the contract provisions and to promote uniformity of results among all Regions of the Washington State Department of Transportation (WSDOT).

Suggestions for corrections, additions, or improvements to this manual, and to the *Standard Specifications* or *General Special Provisions* are welcomed and encouraged. Any means of communication with the Construction Office will be accepted and reviewed promptly.

1-1.2 Definition of Terms

In using this manual, the interpretation of words or terms should be considered the same as set forth under "Definitions and Terms" in Section 1-01 of the *Standard Specifications*. If a conflict should occur between the guidance or instructions offered by this manual and the specifications or provisions identified in the contract, the latter should always prevail.

1-1.3 WSDOT Organization and the Construction Program

1-1.3A Legislature

In 1977, the Legislature established WSDOT. At that time, the authority that had been separately granted to the Highway Commission, the Washington Toll Bridge Authority, and the Aeronautics Division were all transferred to the newly created department, WSDOT. Policy-making authority for the department was assigned to the Transportation Commission. Administrative authority was assigned to the Secretary of Transportation.

1-1.3B Transportation Commission

The seven members of the Transportation Commission are appointed by the Governor. Appointments to the Commission are made on a staggered basis with each Commissioner serving a six-year term. The Commission is vested with the authority to establish policy for WSDOT and to approve and propose, to both the Governor and the Legislature, the biennial budget for the department. The Commission reviews and authorizes all proposed legislation that is requested by the department and exercises continuing review and control of WSDOT's operating budget.

1-1.3C Secretary of Transportation

The Secretary of Transportation is appointed by the Commission. The Secretary is subject to the Commission's policy and guidance and serves as the Chief Executive Officer for the Department. The Secretary is assigned the full administrative authority to direct WSDOT in all of its activities.

1-1.3D Deputy Secretary for Operations

The Deputy Secretary for Operations is the principal assistant to the Secretary of Transportation for operations matters. In the absence of the Secretary, the Deputy Secretary for Operations is authorized to act on all operations matters except those specifically reserved by statute for the official action by the Secretary of Transportation. The Deputy Secretary for Operations exercises general supervisory control over the Assistant Secretaries in charge of major functional areas at the Olympia Service Center and over the Regional Administrators.

1-1.3E Assistant Secretary for Field Operations

The Assistant Secretary for Field Operations reports to the Deputy Secretary for Operations and is responsible for all matters pertaining to the advertisement, award, and execution of all construction contracts, except those executed by the Regional Administrators and the Director of Washington State Ferries Division. The Assistant Secretary for Field Operations, in support of the Regions, is also responsible for administration of all WSDOT construction contracts, except those executed by the Director of Washington State Ferries Division. In addition, the Assistant Secretary for Field Operations is responsible for all materials, laboratory, and soils functions in support of design, construction, and research; all highway maintenance activities; traffic design and operations, the Safety Office, and the Equipment and Facilities Office.

The Assistant Secretary for Field Operations is responsible for certifying all Federal-aid construction projects to the Federal Highway Administration (FHWA). This responsibility also includes the determination as to federal participation in changes and in materials incorporated. The Assistant Secretary for Field Operations is assisted by five principal assistants. These various assistants are outlined in the Table of Organization (Figure 1-1). The Olympia Service Center Construction office is led by the State Construction Engineer, one of the principal assistants.

1-1.4 Olympia Service Center Construction Office

The Olympia Service Center Construction Office strives for consistent, cost-effective, quality construction through direct support of WSDOT's Regional construction program. The Construction Office coordinates the development of policies and standards, provides training, guidance, oversight, technical expertise and advocacy, introduces innovation, and coordinates and shares information on construction issues.

1-1.4A State Construction Engineer

The State Construction Engineer reports to the Assistant Secretary for Field Operations and is assigned the responsibility for all WSDOT contract construction projects, except those contracts executed by the Director of Washington State Ferries Division. The State Construction Engineer is responsible for all matters pertaining to contract administration and represents the Assistant Secretary in managing the performance of these contracts. In addition, the State Construction Engineer acts for the Assistant Secretary in approving increases or decreases of work, changes in the work, changes in materials incorporated into the work, authority to accomplish work by force account, extensions of time, and the assessment of any liquidated damages. The State Construction Engineer is responsible for providing guidance and direction to the Regions and Olympia Service Center construction personnel who are investigating construction claims and is responsible for the approval of all claim settlements. The State Construction Engineer establishes WSDOT policy relative to inspection and documentation and ensures uniform interpretation and enforcement of the *Standard Specifications* and contract provisions throughout the State. The State Construction Engineer is assisted by three principal assistants for construction as outlined in the Table of Organization shown in Figure 1-2.

1-1.4A(1) Administration

The Construction Engineer, Administration, acts for the State Construction Engineer in setting requirements for contracting, policy, and responding to questions from the regions on all issues pertaining to Division 1 of the *Standard Specifications* and Chapters 1 and 10 of the *Construction Manual*. These include, but are not limited to, time extensions, external civil rights contract changes, prevailing wage issues, documentation, and claims resolution. The Construction Engineer, Administration, also represents WSDOT on task forces with contractor organizations, other public agencies, and at the legislature regarding public contracting issues.

The Construction Engineer, Administration, is assisted by:

- The *Assistant Construction Engineer, Administration*, who reviews time extensions and liquidated damage assessments, is responsible for prevailing wage issues, and represents the Construction Office on external civil rights issues. The Assistant Construction Engineer for Administration also acts as liaison to various external stakeholders and suppliers.
- The *Documentation Engineer*, who provides guidance for contract documentation and contract payments, as well as providing support to Region Documentation Engineers. The Documentation Engineer resolves issues of material documentation deficiencies for all federal aid projects.
- The *Specification Engineer*, who is responsible for maintaining the *Standard Specifications*, the *Construction Manual* and the *Equipment Rental Rate Blue Book*. The Specification Engineer is also responsible for preparing contract acceptance packages.
- The *Construction Administration Support Engineer*, who is the CCIS System Manager, the Construction Office Liaison to MIS, supports the Region and Project Engineer offices by providing training in the use of CCIS and the CCIS Sequel Database. This position also maintains the Construction Office intranet web page.

1-1.4A(2) Roadway

The Construction Engineer, Roadway, acts for the State Construction Engineer in matters of highway construction such as grading, drainage, surfacing, paving, signing, guard rails, illumination, traffic signals, landscaping, rest areas, and other projects as assigned.

For the purpose of establishing uniformity between the Regions, the Construction Engineer, Roadway, is responsible for establishing accepted practices for construction, construction engineering, and contract administration for work performed within these fields. Some of these responsibilities include inspecting projects, evaluating reasons for contract changes, approving change orders, conducting or assisting in contract negotiations, investigating complaints and claims, and providing recommendations on major changes to the State Construction Engineer.

The Construction Engineer, Roadway, is assisted by three professional engineers.

1-1.4A(3) Bridges

The Construction Engineer, Bridges, acts for the State Construction Engineer in matters for bridges and related structural construction, and other projects as assigned. For the purpose of establishing uniformity between the Regions, the Construction Engineer, Bridges, is responsible for establishing accepted practices for construction, construction engineering, and contract administration of work performed in construction of bridges and other related structural construction. Some of these responsibilities include inspecting projects, evaluating reasons for contract changes, approving change orders, conducting or assisting in contract negotiations, acting as a resource to the Regions for resolving construction related problems, investigating complaints and claims, and providing recommendations on major changes to the State Construction Engineer.

The Construction Engineer, Bridges, is assisted by two professional engineers.

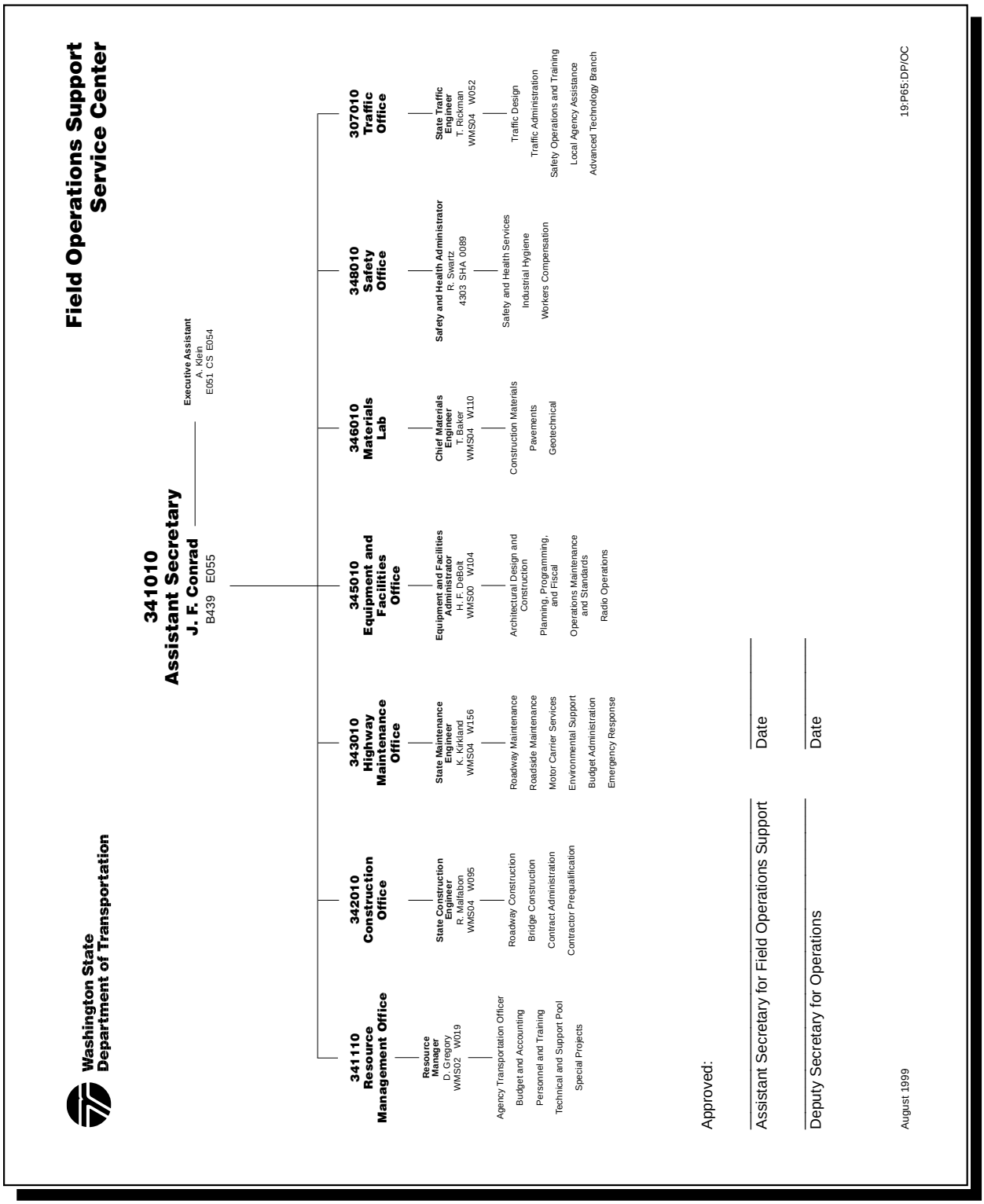
Washington State
Department of Transportation
Field Operations Support
Service Center
341010
Assistant Secretary
J. F. Conrad
B439 E055
Executive Assistant
A. Klein
E051 CS E054
341110
Resource
Management Office
Resource
Manager
D. Gregory
WMS02 W019
Agency Transportation Officer
Budget and Accounting
Personnel and Training
Technical and Support Pool
Special Projects
342010
Construction
Office
State Construction
Engineer
R. Malfabon
WMS04 W095
Roadway Construction
Bridge Construction
Contract Administration
Contractor Prequalification
343010
Highway
Maintenance
Office
State Maintenance
Engineer
K. Kirkland
WMS04 W156
Roadway Maintenance
Roadside Maintenance
Motor Carrier Services
Environmental Support
Budget Administration
Emergency Response
345010
Equipment and
Facilities
Office
Equipment and Facilities
Administrator
H. F. DeBolt
WMS00 W104
Architectural Design and
Construction
Planning, Programming,
and Fiscal
Operations Maintenance
and Standards
Radio Operations
346010
Materials
Lab
Chief Materials
Engineer
T. Baker
WMS04 W110
Construction Materials
Pavements
Geotechnical
348010
Safety
Office
Safety and Health Administrator
R. Swartz
4303 SHA 0089
Safety and Health Services
Industrial Hygiene
Workers Compensation
307010
Traffic
Office
State Traffic
Engineer
T. Rickman
WMS04 W052
Traffic Design
Traffic Administration
Safety Operations and Training
Local Agency Assistance
Advanced Technology Branch
Approved:
Assistant Secretary for Field Operations Support
Date
Deputy Secretary for Operations
Date
August 1999
19:P65:DP/OC

Figure 1-1

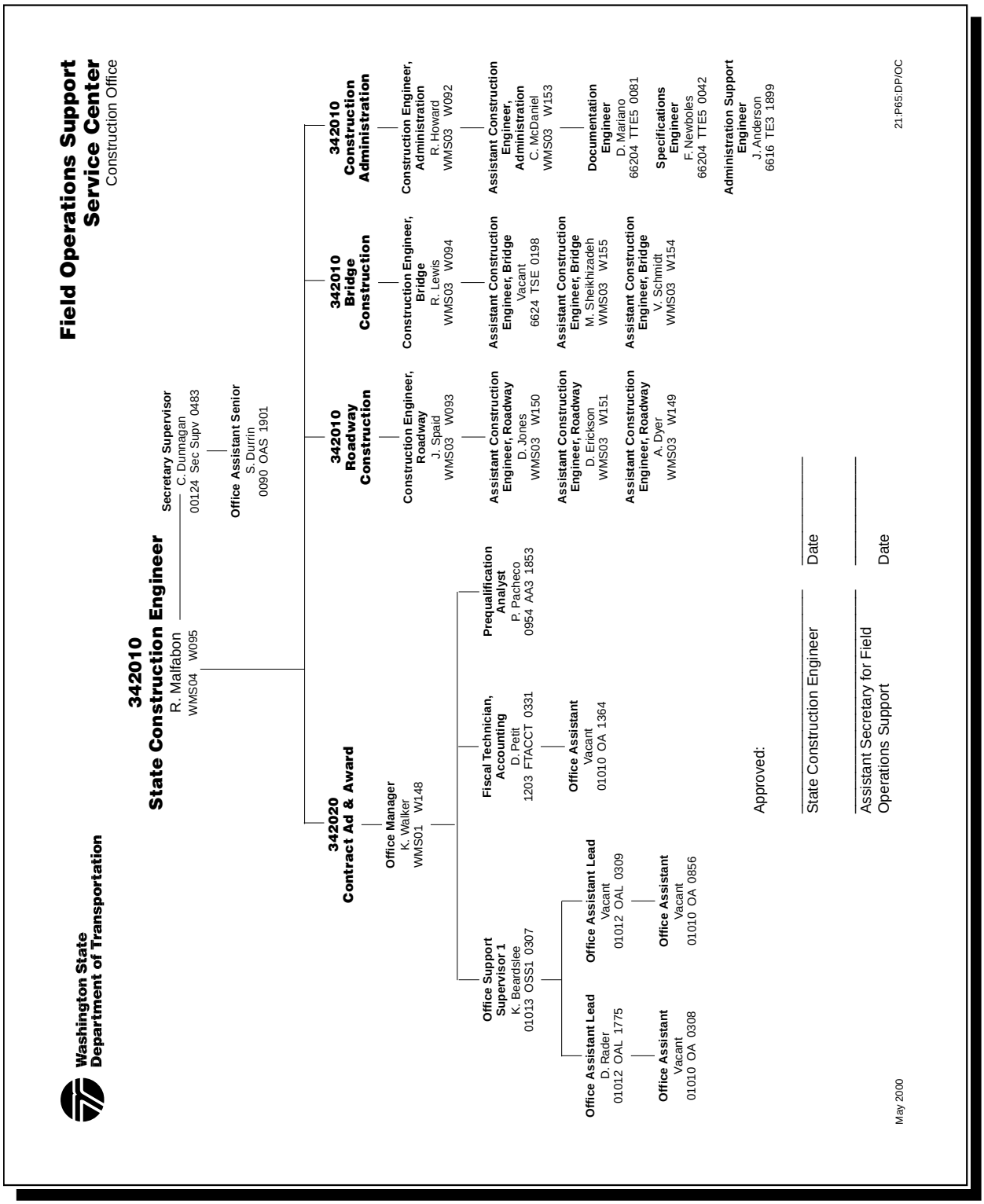
Washington State
Department of Transportation
Field Operations Support
Service Center
Construction Office
342010
State Construction Engineer
R. Malfabon
WMS04 W095
Secretary Supervisor
C. Dunnagan
00124 Sec Supv 0483
Office Assistant Senior
S. Durrin
0090 OAS 1901
342020
Contract Ad & Award
Office Manager
K. Walker
WMS01 W148
Office Support
Supervisor 1
K. Beardslee
01013 OSS1 0307
Office Assistant Lead
D. Rader
01012 OAL 1775
Office Assistant Lead
Vacant
01012 OAL 0309
Office Assistant
Vacant
01010 OA 0308
Office Assistant
Vacant
01010 OA 0856
Fiscal Technician,
Accounting
D. Petit
1203 FTACCT 0331
Office Assistant
Vacant
01010 OA 1364
Prequalification
Analyst
P. Pacheco
0954 AA3 1853
342010
Roadway
Construction
Construction Engineer,
Roadway
J. Spaid
WMS03 W093
Assistant Construction
Engineer, Roadway
D. Jones
WMS03 W150
Assistant Construction
Engineer, Roadway
D. Erickson
WMS03 W151
Assistant Construction
Engineer, Roadway
A. Dyer
WMS03 W149
342010
Bridge
Construction
Construction Engineer,
Bridge
R. Lewis
WMS03 W094
Assistant Construction
Engineer, Bridge
Vacant
6624 TSE 0198
Assistant Construction
Engineer, Bridge
M. Sheikhizadeh
WMS03 W155
Assistant Construction
Engineer, Bridge
V. Schmidt
WMS03 W154
342010
Construction
Administration
Construction Engineer,
Administration
R. Howard
WMS03 W092
Assistant Construction
Engineer,
Administration
C. McDaniel
WMS03 W153
Documentation
Engineer
D. Mariano
66204 TTE5 0081
Specifications
Engineer
F. Newboles
66204 TTE5 0042
Administration Support
Engineer
J. Anderson
6616 TE3 1899
Approved:
State Construction Engineer
Date
Assistant Secretary for Field
Operations Support
Date
May 2000
21-P65-DP/OC

Figure 1-2

1-1.5 Materials

The Materials Engineer acts for the Assistant Secretary for Field Operations by directing the materials testing, inspecting, and acceptance functions of WSDOT. Subject to the approval of the Assistant Secretary for Field Operations, the Materials Engineer; formulates and recommends policies and procedures; directs operating methods to be followed in providing precontract soils, foundation, and materials analysis and testing; recommends and/or approves Pavement Designs; furnishes counsel and technical assistance to the Regional Construction Manager in conducting required materials tests and analysis and provides for periodic review of these test methods and procedures to ensure their conformance to established policies, procedures, and methods; and provides a program that verifies the uniformity of all testing and sampling procedures.

The Materials Engineer is assisted by a staff of professional engineers, administrative personnel, engineers, and technicians.

1-1.6 Region Organization

1-1.6A Regional Administrator

The Regional Administrator represents the Secretary in a geographic area, organizes and supervises a staff of personnel which perform administrative duties and supervise location, design, construction, and maintenance of the highway system within the Region.

1-1.6B Regional Construction Manager

In supervision of construction, the Regional Administrator is assisted by a Regional Construction Manager. The Regional Construction Manager assigns Project Engineers with appropriate supporting personnel and provides training and guidance to the Project Engineers. It is the responsibility of the Regional Construction Manager to ensure that sufficient personnel are provided on all projects at all times to ensure adequate inspection, documentation, and quality controls.

1-1.7 Relationship With Other Agencies

1-1.7A Federal Highway Administration

The Federal Government provides transportation funding to Washington State through the Federal Highway Administration (FHWA), a division of the United States Department of Transportation. These funds are subject to applicable Federal law, Executive Orders, regulations, and agreements.

The WSDOT contact with FHWA for Construction Administration matters is the OSC Construction Office. In preparing and approving standard specifications, general special provisions, and this manual, the Construction Office seeks the review and approval of FHWA. Use of approved provisions and meeting the required outcomes described in the manual become the basis of federal reimbursement.

FHWA provides oversight of WSDOT work on some projects and has delegated that responsibility to WSDOT on others. In accordance with the Construction Monitoring Plan, which is part of the WSDOT/FHWA Stewardship agreement, project type and size determine whether FHWA, the Construction Office, or the Region will conduct the inspections and reviews necessary to verify adequate compliance with the Federal rules, regulations and procedures.

1-1.7B Local Agencies

Cities, counties, and other municipalities within the state may also perform work funded with Federal dollars. When this happens, the money is passed through the Department of Transportation and we will have entered into agreements with the local agencies to provide services. For example, WSDOT will allow the use of testing facilities by a local agency.

1-1.7B(1) Project Engineer Administering Local Agency Project

Occasionally, a WSDOT Project Engineer may be assigned to provide engineering and inspection services on a local agency project. The duties of the Project Engineer will be determined by the actual contract provisions and by any specific agreement made between the Region administration and the local agency. The provisions of this manual may or may not apply, depending on the situation.

1-1.7B(2) Local Agency Administering Its Project on State Right of Way

In some cases, WSDOT may grant approval for a local agency to construct a facility on State Right of Way using local agency staff and contractors. (For example, a city-funded overpass of an interstate). When this happens, a Project Engineer will be assigned to provide oversight of the local agency work. The Project Engineer is expected to assure that the local agency provides the same level of engineering and inspection that State employees would accomplish. All the requirements of the *Standard Specifications* and this manual must be met.

1-1.7C Other Federal, State, and Local Agencies

The design and construction of transportation improvements often incorporates locations and features that fall within the jurisdiction of other agencies. It is the policy of WSDOT to cooperate with all agencies as partners in the completion of each project, recognizing and complying with each agency's requirements. The Project Engineer shall cooperate with local authorities to help ensure that the contractor complies with local laws, ordinances, and regulations. However, unless specifically allowed in the statutes and the contract documents, no WSDOT employee shall engage in any kind of enforcement of laws, rules, regulations, or ordinances which are the responsibility of other agencies. As WSDOT attempts to earn confidence and build trust with resource agencies and the public, it is critical that we take the proper actions when we are aware of an issue. When WSDOT employees observe something which is questionable or appears to not be in compliance with local laws, ordinances, and regulations, it shall be brought to the Project Engineer's attention. The Project Engineer is responsible for bringing it to the Contractor's attention for proper action. Rely on the Regional and Olympia Service Center expertise and

the appropriate agencies when dealing with complex issues such as environmental compliance, safety, or hazardous materials.

1-1.8 Relating to the Public

Public confidence is enhanced by WSDOT personnel being responsive to reasonable requests for information, providing timely advanced notice of possible impacts, and reducing inconvenience to traffic while maintaining worker safety. When possible, the Project Engineer should rely on resources such as Regional Public Information Officers and the OSC Office of Communications and Public Involvement. If there is concern or reason to question the confidentiality or sensitivity of the information requested, consult with your supervisor or seek the advice of the Attorney General's office.

1-1.9 Safety

Safety is not optional in WSDOT. No employee will be permitted to disregard applicable safety and health standards of the State Department of Labor and Industries or other regulatory agencies.

Since WSDOT employees on transportation construction projects are routinely exposed to a variety of hazards, they must take adequate safety precautions at all times. The following items are emphasized as they represent common activities that workers or work crews may encounter.

- The employee shall ensure that an area is safe before entering it for the purpose of inspection. For example, a deep trench must be adequately shored and braced before entering it.
- WSDOT employees working around aggregate production and processing plants must be particularly careful for both themselves and others to avoid accidents.
- The employee must at all times watch for backing trucks and not depend upon hearing alone for warning. The noise of plants and other equipment often make it impossible to hear trucks approaching and the truck driver's vision area is restricted when backing a truck.
- Parking WSDOT vehicles too close to the path of construction equipment, behind standing equipment, or in other hazardous locations is not permitted.
- Where traffic is maintained in work zones, care must be taken to avoid approaching traffic when it is necessary for inspectors and others to step onto or cross the traveled portion of the roadway. Whenever possible, work activities, ingress and egress, should be conducted within the relative safety of the work zone.
- WSDOT employees working on foot in the highway right of way and other areas exposed to vehicular traffic must comply with the same high visibility clothing requirements imposed on the contractor by Section 1-07.8 of the *Standard Specifications*.
- Where the engineering crew is working adjacent to traffic, without positive barriers, the work area should be marked with proper signs and traffic control devices as shown on the appropriate Traffic Control Plan (TCP). The crew may be protected by a certified flagger or spotter as needed.
- When the engineering crew is working under the protection of the Contractor's flaggers and signs, other signs may not be needed, but a "STOP"/"SLOW" paddle should be available for use in special situations. Good communication with the Contractor and Flagger is needed to ensure that they are aware of crew activities within the work zone.
- A survey crew is typically exposed to traffic hazards and should conduct survey work under approved TCPs from the *Work Zone Traffic Control Guidelines for Survey Operations* booklet or the Traffic Control Guidelines book. The Region Traffic Office will assist survey crews with TCPs for situations not covered in these publications.
- During blasting operations, employees are instructed to seek cover at least 500 feet (150 meters) from the location of the blasting.

In addition to the above requirements for workers and work crews, supervisors also have the following responsibilities:

- Each supervisory employee is charged with the responsibility of providing safety leadership at all times and safety enforcement when necessary.
- Supervisors shall give thorough instructions to employees under their jurisdiction on the safe use of tools, materials, and equipment and the safe prosecution of work on construction projects.
- The Washington Industrial Safety and Health Act requires that every foreman, supervisor, or other person in charge of a crew have a valid first aid card.
- When employees are injured on the job to the extent that the services of a doctor are required, the Regional Safety Officer shall be notified immediately.
- When traffic control measures are necessary, approved Traffic Control Plans (TCPs) should be used in conformance with the *Manual on Uniform Traffic Control Devices,* as adopted by WSDOT. Supervisors should ensure that the appropriate TCP is used and that the necessary signs, devices and equipment is available.

Aggregate production and material processing plants should be inspected for safety hazards. Corrective measures should be called to the attention of the Contractor or producer. Corrections must be completed before WSDOT personnel will be permitted to proceed with entry or work upon the premises.

1-1.10 Archaeological and Paleontological Salvage

It is both National and State policy to preserve historical or prehistorical objects and ruins. These objects and ruins may include sites, buildings, artifacts, fossils, or other objects of antiquity that may have particular significance from a historical, cultural, or scientific standpoint.

If there is a known probability of encountering historical objects, the contract will most likely have included provisions for archaeological and paleontological salvage. The special provision will usually define any potential sites and outline any recognized salvage procedures or required salvage provisions.

If provisions for archaeological and paleontological salvage have not been made in the contract and it appears that significant historic or prehistoric objects or ruins have been or are about to be encountered, the Project Engineer should immediately take steps to preserve and protect the objects or ruins. Once the objects or ruins have been sufficiently protected, the Project Engineer should immediately notify the Region Construction Manager, who will provide any necessary initial assistance to the Project Engineer. Where the Region determines appropriate, the Project Engineer will contact and inform through existing Region contracts and Region affiliations, Eastern Washington University, the State Historic Preservation Officer (SHPO), and FHWA of the discovery. The Project Engineer will also help facilitate any on-site meetings for the appropriate parties should either FHWA, SHPO, or Eastern Washington University believe it necessary. If it is determined that the Region will conduct a meeting of the appropriate parties, the actions detailed in the Memorandum of Understanding between FHWA and the Heritage Conservation and Recreation Service (HCRS) should be taken.

1-1.11 Construction Work in International Boundary Strip

The International Boundary Commission of Washington, D.C., by treaty with Canada, has the exclusive jurisdiction of the 20-foot (6.1-meter) boundary strip, 10 feet (3.05 meters) on each side of the International Boundary. Any construction work within this strip must be with the exclusive permission of the International Boundary Commission (IBC). Boundary monuments are not to be moved or disturbed in any manner without the expressed approval of the IBC. It is expected that permission for all work within the boundary strip will be obtained from the IBC during the design stage of a project. However, it is the Project Engineer's responsibility to ascertain that permission has, in fact, been obtained from the IBC for all work performed within the boundary strip. The Region shall be immediately notified if, upon construction, it is found that permission has not been obtained in order to relocate boundary markers or perform construction work in the 20-foot (6.1-meter) boundary strip.

1-2 Contract Administration

1-2.1 Proposal and Award of Contract

1-2.1A Contract Proposal and Bids

When the design phase of a project is completed and funding has been secured, the public is then notified that WSDOT is ready to accept bids for completion of the work involved. This notice is accomplished by publishing an advertisement for the project, along with an invitation to bid the work, in the "*Daily Journal of Commerce*". The advertisement includes a specific date and time for the opening of bids along with the necessary information for obtaining plans, specifications, and bid documents. Once advertised, these plans and specifications are then made available to all contractors who wish to study the project. Contract proposal forms or bid documents are also furnished, but only to those prospective contractors who have been prequalified to bid on the types and quantities of work involved. Once bids have been opened, an announcement in the "*Daily Journal of Commerce*" will also be made identifying the "Apparent Low Bidder". Specific information regarding the advertisement phase and bidding procedures can be found in the *Ad & Award Manual*, M 27-02

If the Project Engineer determines that prospective bidders may have difficulty locating the project or determining the project limits, the Project Engineer may choose to post the project limits. If this is determined necessary, signs similar to those illustrated in Figure 1-3 should be used.

Section 1-02.4 of the *Standard Specifications* requires that all requests for explanation or interpretation of the contract documents be submitted in writing. Anytime the answer to a question from a prospective bidder would provide additional information that would not be available to all bidders, the Project Engineer should immediately contact the Region Construction Manager or Region Plans Office in order to facilitate the preparation of an Addendum. Answers to such questions must be provided to all bidders in the same manner. If the question has to do with generic issues such as office procedures (for example, methods of payment calculation or handling requests for information,) the answer may be provided directly to the questioning party without involving other bidders.

All questions from prospective bidders regarding an advertised project should be referred to the Project Engineer listed in the "Notice to All Planholders" for a complete response. The Project Engineer will coordinate the effort to determine if any requested information needs to be addressed by an addendum.

1-2.1B Award and Execution of Contract

Bids for the contract are opened at a public meeting where each prospective bidder's proposal is read and the Apparent Low Bidder is announced. Within 45 calendar days of bid opening, the proposals will be closely reviewed and the contract will be awarded to the lowest bidder deemed responsive. In accordance with Section 1-03 of the *Standard Specifications*, the successful bidder is then allowed 20 calendar days to return the signed documents that are necessary to enter into a contract with WSDOT.

After these documents are returned to WSDOT, the contract must be approved and executed by the Secretary of Transportation, Deputy Secretary for Operations, Assistant Secretary for Field Operations, Regional Administrator, or the Director and CEO of Washington State Ferries. No proposal submitted by a Contractor is binding upon WSDOT prior to the date of execution by WSDOT. No work is to be performed within the project limits or WSDOT-furnished sites prior to the execution of the contract by WSDOT. Any work that is performed by the Contractor outside of these areas, or any material that

is ordered prior to WSDOT execution, is done so solely at the risk of the Contractor.

In order to ensure timely notification to the Contractor regarding execution of the contract and authority to proceed, the following procedure is used:

1. Immediately after execution of the contract documents by WSDOT, the Olympia Service Center Accounting Office or (for Region Ad & Award projects) the Region Plans Office will notify the office administering the contract (the Regional Construction Manager's Office, the Director of Terminal Engineering, or the Architecture Office). The Service Center Accounting Office also notifies the State Department of Revenue, State Department of Labor and Industries, and other interested parties that the contract has been executed.

2. The Regional Construction Manager or a representative should contact the Project Engineer's office as soon as notification is received. The Project Engineer should then contact the Contractor and provide notification of the execution date. The date, time, and method of notification in all instances should be recorded in the project diary.

3. Following the initial contact, the Accounting Office or the Region Plans Office will send executed copies of the contract to the Contractor and the Project Engineer.

1-2.1C Preconstruction Meetings, Discussions

If the Project Engineer decides a formal meeting is necessary in order to successfully begin work on the project, a meeting should be arranged as soon as practical after the contract is awarded and the Contractor has organized for the work. This preconstruction meeting is intended for the purpose of discussing the project and to exchange a variety of information. Depending upon the complexity of the project, this information can be exchanged in any combination of the following methods:

- Information packets provided to the Contractor
- Letters transmitting information
- Informal meetings
- A single multipurpose formal meeting
- Several formal meetings with different purposes

All information exchanged should be documented in the project records, by formal meeting minutes, by file copies of letters, or by diary entries.

The nature, amounts, and methods of communication with the Contractor are left to the Project Engineer. As a minimum, the following subject areas should be covered during the preconstruction time period:

- CONTRACTOR-WSDOT RELATIONSHIPS

  The Project Engineer should begin to develop a positive and effective relationship with the Contractor as soon as the contract is awarded. This is also a good time to introduce the concept of "Partnering" if it has not already been introduced on the project. The Project Engineer should strive to create an environment that encourages a cooperative approach to completing the project. This can be helped by beginning the development of a team consisting of both the Contractor's and WSDOT's project people. The level of authority delegated to each member of the Project Engineer's staff should be discussed with the Contractor. In addition the methods of establishing the Contractor's Performance ratings can be reviewed (Manual M 41-40) (see Chapter 1-2.8F of this manual for additional information). The Contractor should also be informed that there is an opportunity to evaluate the WSDOT construction process as well.

- ENVIRONMENTAL COMMITMENTS

  If there are commitment files for the project, these should be made available and discussed with the Contractor. Any references in the *Standard Specifications* or the special provisions to environmental requirements or permits should be discussed. The Contractor's responsibility to obtain any local agency permits should also be discussed. If rock crushers are involved in the project, the State Department of Ecology registration requirements should be discussed (WAC 173-400). In addition, a written record of this discussion should be sent to the regional office of the State Department of Ecology so that they are aware of the timing and location of the rock-crushing operation.

- ORDER OF WORK AND TIME SCHEDULES

  In order for the Project Engineer to set up the required crews, arrange for any special inspections, provide timely reviews of submittals, etc., the project office must be made aware of the contractor's schedule of work. In addition the contract specifications may include specific requirements for sequencing or durations for some items of work. The contract requirements for progress schedule or time for completion in accordance with Section 1-08, or as amended by the special provisions, can also be discussed.

- SUBCONTRACTORS AND LOWER TIER SUBCONTRACTORS

  In accordance with Section 1-08.1 of the *Standard Specifications*, the Project Engineer needs to become aware of the Contractor's plans to delegate portions of the work to subcontractors. These plans must conform with the condition of award, if any, related to disadvantaged, minority, or women's business enterprise participation. The Project Engineer should explain the requirements and process involved for subcontractor and lower tier subcontractor approval, including the prevailing wage rate requirements outlined in the contract documents (see Chapter 1-2.6 of this manual).

  WSDOT/Contractor/Subcontractor relationships should also be discussed. The Project Engineer should remind the Contractor that there is no contractual relationship between WSDOT and the subcontractors. All subcontractor correspondence with WSDOT should pass through the Contractor for submittal to WSDOT

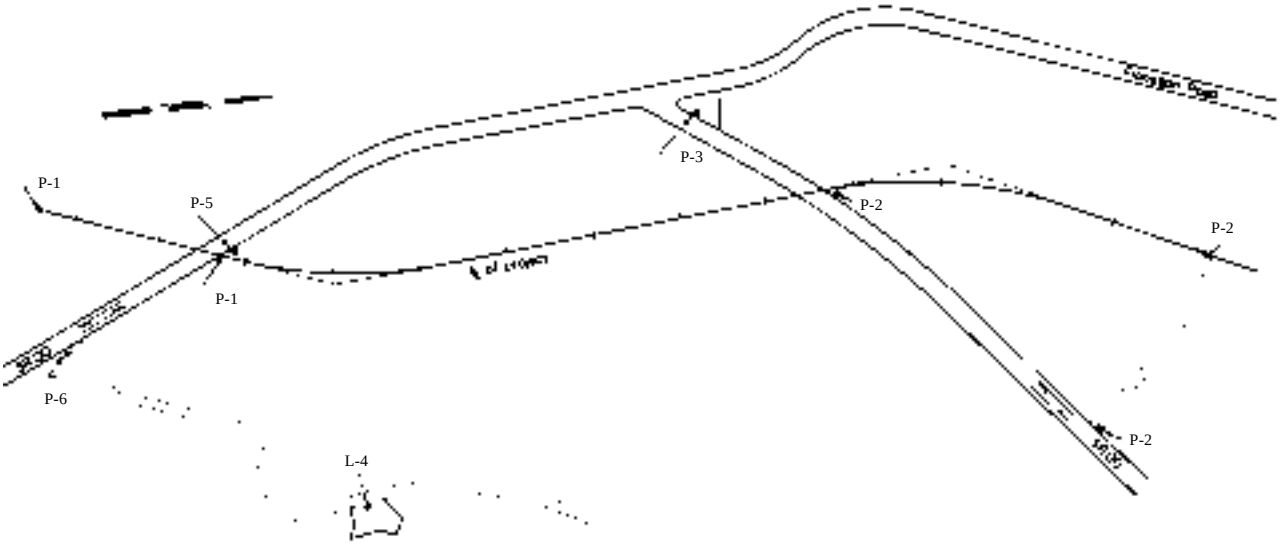

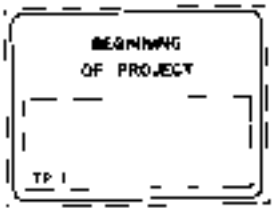

P-1

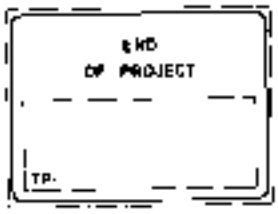

P-2

P-4

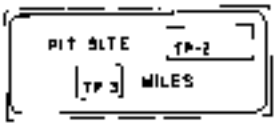

P-6

P-3

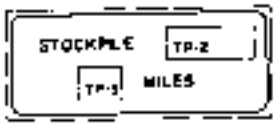

P-5

Notes:

This plan is typical. Any particular project should be signed to meet the physical conditions.

M6-1 Directional Arrow signs shall be installed as necessary.

See *Sign Fabrication Manual* for sign specifications.

Figure 1-3

or vice versa. Contractor representation should also be discussed. It is also necessary for the Contractor to be represented at the job site at all times, even when there is only subcontractor work in progress.

- UTILITIES, RAILROADS, AND OTHER THIRD PARTIES

  If the project affects or is affected by third party organizations, the Project Engineer must advise the Contractor about the relationships with the third parties and the expectations they hold regarding the actions of both WSDOT and the Contractor. The Project Engineer may wish to arrange face-to-face meetings with representatives of affected third parties. In the case of utilities, reference should be made to the underground locator services and the requirements to utilize them (see RCW 19.122). If WSDOT has agreed to notification time limits, these should be communicated to the Contractor. If special insurance is required by any agreements with third parties, then these requirements should be pointed out to the Contractor.

- SAFETY AND TRAFFIC CONTROL

  The Contractor's safety program should be discussed as outlined in Section 1-2.2I(3) of this manual. WSDOT has an interest in safe operations on the job and the Project Engineer should make clear that this interest will be protected. As part of a discussion of specific safety requirements of the particular work, safety considerations for workers and WSDOT personnel, such as safety zone requirements, vehicle intrusion protection, fall prevention, closed spaces, hazardous materials, work around heavy equipment, etc., should be addressed. The need for control of speed on all construction equipment should be emphasized.

  The Project Engineer should describe WSDOT's traffic requirements. The Contractor's Traffic Control Manager (TCM), Traffic Control Supervisor (TCS) and WSDOT's TCS should be identified and their responsibilities and authorities clearly stated. Any traffic control requirements that are unique or restrictive should be emphasized and addressed by the Contractor with respect to construction operations. Unacceptable delays to traffic should also be discussed.

  The *Manual on Uniform Traffic Control Devices*, as adopted by WSDOT, is the legal standard for all signing, traffic control devices and traffic control plan requirements on the project. These standards have been incorporated into the project Traffic Control Plans (TCPs.) If the Contractor chooses to use these TCPs, they must be formally adopted in writing as required in Section 1-10.2(2) of the *Standard Specifications*. If the Contractor wishes to use some other traffic control scheme, then that plan must be submitted and approved in advance.

  Flaggers and their intended locations must be included in the plans. When Flaggers are utilized, they must have a current flagging card and shall be equipped with hard hats, vests, and standard stop/slow paddles as required in Sections 1-07.8 and 1-10.3 of the *Standard Specifications*. Overuse of flaggers is not appropriate as "catch all" traffic control and should be discouraged. Safety of flaggers, through use of physical protection devices where practical, proper flagging methods and formulating an emergency escape plan, should be emphasized.

  The Contractor and the Project Engineer should establish communication with the Washington State Patrol (WSP) and local law enforcement agencies. Law enforcement advice about traffic control should be considered. Arrangements for all law enforcement agencies to notify the project office about accidents near, or in, the construction area should be established, if possible. If WSP traffic control assistance is intended to be used, a general discussion of strategy and responsibilities should be included.

  Off-site hauling can pose a safety hazard to the public. WSDOT will cooperate with law enforcement agencies in the enforcement of legal load limit requirements and the covered load regulations. The Project Engineer should discuss this with the Contractor before any hauling begins.

- CONTROL OF MATERIALS

  The Contractor should be reminded of Section 1-06.1 of the *Standard Specifications*, requiring the Engineer's approval of all materials prior to their use. In order to expedite these approvals, the Contractor should be encouraged to make these requests as early as possible. The Project Engineer should provide the Contractor with a current copy of the Record of Materials (ROM) for the project. The Project Engineer should discuss the ROM with the Contractor, covering the various requirements for sampling, catalog cuts, shop drawings, certification requirements, etc., which may be needed for approval of materials prior to their use. The requirements of Section 1-06.2 of the *Standard Specifications* for ongoing acceptance of approved materials prior to their being incorporated into the work, should also be discussed. If fabricated items will be needed, the inspection process for fabricated materials, including shop drawing approvals and notification requirements for fabrication inspectors, should also be outlined. The requirements of Section 1-06.3 of the *Standard Specifications* that require manufacturer certifications prior to use of the materials should also be reviewed.

  The Contractor should be reminded that, in order to avoid deferred progress payments for work completed, all necessary documentation for approval of materials and required certifications must be received and accepted prior to their use.

- OTHER SUBMITTALS

  Discuss any other submittals that may be needed during the course of the contract. This may include Falsework and Forming Plans, Traffic Control Plans, Temporary Water Pollution/Erosion Control Plans, Schedules, Installation or Operating Procedures, or

other Contractor-initiated items requiring WSDOT review and/or approval. There are requirements for a number of submittals which, if not satisfied in a timely manner, could delay the initial progress payment. These include the Statement of Intent to Pay Prevailing Wages, the Progress Schedule, and the Training Plan. There may be others depending on the work to be done and as required by the contract provisions. The Project Engineer should identify and remind the Contractor of these requirements and the potential for deferred payments.

- D/M/WBE PARTICIPATION / EEO / TRAINING

  The Project Engineer should briefly discuss and answer any questions the contractor may have with regard to the efforts, reports, and monitoring necessary to ensure performance in this area. The following outline of key issues may be used in the discussion as the Project Engineer deems appropriate. With recent changes in the State law as well as the federal laws, there are a variety of requirements depending on what laws were in place at the time the contract was executed and how the project is funded. The thing to remember is that the special provisions, standard specification and amendments establish specific contract requirements.

  ALL PROJECTS

  Nondiscrimination Requirements/Equal Employment Opportunity (EEO) General Requirements

  Regardless of funding, *Standard Specification* 1-07.11 pertains to every contract:

  - WSDOT has an obligation to ensure nondiscrimination in every aspect of our contracting, particularly the hiring, firing, training, promotion, and utilization of employees.
  - The contractor is required to designate an Equal Employment Opportunity (EEO) Officer
  - The contractor is required to have, make known, and utilize an EEO policy.
  - The contractor must maintain records with regard to hiring practices.
  - A comprehensive construction compliance review may be performed by WSDOT after the project is complete to ensure that all of the requirements of 1-07.11 have been met.
  - Deficiencies may result in the noted sanctions including, but not limited to, impacting a contractor's prequalification.

  Prompt Return of Retainage to All Subcontractors

  The *Standard Specifications* require that any retainage held by the Prime from a subcontractor shall be released within a designated time period after completion of that subcontractor's work. WSDOT will not become involved in the determination of subcontractor completion.

  Indian Preference and Tribal Employment Rights Ordinances (TERO)

  Projects that include work on an Indian reservation may be subject to tribal laws and taxes. As part of these requirements the contractor may be obligated to utilize Indian labor. The contractor needs to communicate directly with the Tribe to determine and meet these obligations. Hopefully, this has occurred prior to bid. It would be a good idea to establish a working relationship and clarify expectations with the tribal representative.

  STATE FUNDED

  Minority and Women Owned Business Enterprise (MWBE)

  The State Office of Minority and Women's Owned Business Enterprises (OMWBE) certifies businesses as being a minority (MBE) or women owned business (WBE) or both (MWBE). On projects funded with State funds only, there will be a MWBE general special provision which specifies voluntary goals for the utilization of minority and women business enterprises. The contractor is also encouraged to take actions which encourage MWBE participation. However, as the title indicates, these requirements are indeed voluntary and there are no preferences for accomplishment nor sanctions for noncompliance.

  MWBE Reporting

  The contract requires the submittal of an Annual Report of Amounts Paid MBE/WBE Participants. This report, which is due annually on July 20 and at the end of the project, is a condition of project completion (*Standard Specifications* Section 1-08.5).

  Equal Employment Opportunity (EEO)

  EEO requirements are in accordance with Section 1-07.11 "Requirements for Nondiscrimination."

  EEO Reporting

  In accordance with *Standard Specification* 1-07.11(10)B "Required Records and Retention" the contractor shall maintain "Monthly Employment Utilization Reports" in their records. These records may be requested in the event the project is selected for an EEO compliance review and failure to maintain these records may result in a finding of noncompliance.

  FEDERAL PARTICIPATING

  Disadvantaged Business Enterprise (DBE)

  DBE is the designation for holding federal certification as a disadvantaged firm. On Federally funded projects, there will usually be DBE utilization requirements specified by general special provision. The special provision will be one of two types:

1. GSP Includes Voluntary Goal

   The voluntary goal is included to inform the contractor of opportunities for subcontracting with DBEs. The contractor is encouraged to take actions which encourage DBE participation. However, as the title indicates, these requirements are indeed voluntary and there are no preferences for accomplishment nor sanctions for non-compliance.

   Additional Execution Document

   Successful bidders will be required to provide a "bidders list" to the Department. This list will include the names and addresses of every firm that submitted a bid or quotation to the Prime, whether or not that bid was used as part of the overall proposal. The Contractor will be directed to send this list directly to the Office of Equal Opportunity at the Olympia Service Center and the Project Engineer should not have to deal with it at all.

   DBE Reporting

   "Quarterly Report of Amounts Credited as DBE Participation" is required by DBE special provision. The measurement is not simply the payment to the DBE, it is required to be in accordance with the "DBE Participation" section of the special provision

2. GSP Includes Condition Of Award (COA) Goal

   - As a condition of award, the contractor must commit to, and follow through on, subcontracting at least the goal amount to certified DBE firms.
   - Measurement of attainment is not simply the payment to the DBE, it is in accordance with the "DBE Participation" section of the special provision.
   - Changes to the COA amount must be in accordance with the procedures outlined in this manual, Chapter 1-2.7E, Disadvantaged Business Enterprise.

   Additional Execution Document

   As in the case of voluntary goals described above, the successful bidder will be required to submit a "bidders list" to the Department.

   DBE Reporting

   "Quarterly Report of Amounts Credited as DBE Participation" is required by DBE special provision. The measurement is not simply the payment to the DBE, it is required to be in accordance with the "DBE Participation" section of the special provision

Equal Employment Opportunity (EEO)

Requirements are in accordance with Section 1-07.11 "Requirements for Nondiscrimination" and a general special provision.

EEO Reporting (Under $100,000)

- In accordance with *Standard Specification* 1-07.11(10)B "Required Records and Retention", the contractor shall maintain "Monthly Employment Utilization Reports" in their records. These records may be requested in the event the project is selected for an EEO compliance review and failure to maintain these records may result in a finding of noncompliance.

EEO Reporting (Over $100,000)

- In accordance with *Standard Specification* 1-07.11(10)B "Required Records and Retention", the contractor shall submit "Monthly Employment Utilization Reports" to the Project Engineer monthly by the fifth of the month during the term of the contract. These records may also be requested in the event the project is selected for an EEO compliance review.
- Also, in accordance with *Standard Specification* 1-07.11(10)B "Required Records and Retention", the contractor/subcontractor shall submit a "Federal-aid Highway Construction Contractors Annual EEO Report #FHWA 1391 for any year in which work was performed on a project. This form is due by August 25 and includes prime and subcontractor workforce information as of July 31.

Training

Some federally funded projects will be selected for training based on opportunity. Training requirements are included in the contract by special provision.

- Emphasize the importance of timely Training Plan and Trainee submittal for approval.
- Identify the training hours included for payment in the project and discuss the contractor's plan for compliance.

- WAGE RATE ADMINISTRATION

  Advise the Contractor of the requirement to pay prevailing wage rates as identified in the Contract. Advise the Contractor that it is their responsibility to work directly with Washington State Department of Labor and Industries (L&I) for approval of the Statement of Intent to Pay Prevailing Wages (SI) and Affidavit of Wages Paid (AWP) and that:

  - The SI and AWP will be on forms provided by L&I.
  - The forms will be obtained from L&I.

- The contractors, subcontractors, lower tier subcontractors, suppliers, manufacturers, and fabricators that are required to submit SI and AWP will pay the approval fee directly to L&I.
- The Contractor will provide the Project Engineer a copy of the approved forms (SI, before any payment can be made for the work performed and all AWP, before any retained percentage can be released). If payrolls are required, establish submittal deadlines in accordance with Section 1-07.9(5) of the *Standard Specifications*. Describe the wage rate interview process. Describe the required job site posters and provide them to the Contractor (See Chapter 1-2.6 of this manual). On all Federal-Aid contracts, the Project Engineer must remind the Contractor that the work falls under the guidance of Davis-Bacon and Related Acts and the Contract Work Hours and Safety Standards Acts. As indicated in Chapter 1-2.6C of this manual, the U.S. Department of Labor may conduct investigations to ensure compliance with these Acts.

- FORMS

  The Project Engineer should provide the Contractor a description of all required forms, giving the Contractor an initial supply of each. Additional forms required by the Contractor over the course of the work should be provided by the Project Engineer upon request of the Contractor. Remind the Contractor that all form submittals, including those of subcontractors, lower tier subcontractors, and suppliers, should be routed through the Prime Contractor for submittal to WSDOT.

- SUMMARY

  While these issues are to be discussed with the Contractor in some manner at the beginning of each contract, the Project Engineer is free to select the most effective method of doing so. A formal preconstruction conference may or may not be the best solution. Perhaps a single meeting is adequate or several meetings may be required. The entire preconstruction communication may also be covered in a short meeting between the Project Engineer and the Contractor. The Project Engineer is responsible to address the information and inform the Contractor in some manner and maintain a written summary of the preconstruction meetings or discussions for the contract files.

  The Contractor and Project Engineer may be knowledgeable about those normal requirements listed above. In this situation, some items need only be listed in a mailing as a convenience to the Contractor's staff. Unique features, constructibility, and third party coordination should be focused on with as many of the interested parties as can be assembled.

  The key is effective communication, getting the right message to the necessary people. Additional meetings may be required as people change, as new facets of the work become imminent, or as the project goes into a second or third season. In order to assist this process, a checklist has been developed as a tool for the project office's use. It can be used to help identify the issues and track them for completion through the various preconstruction communications. See Figure 1-4.

1-2.2 Project Engineer's Relationship and Responsibilities

1-2.2A Assignment

The Region will appoint a Project Engineer to act as the authorized representative of the Secretary of Transportation for each contracted project. After the contract has been executed by WSDOT, the Region may provide the Contractor with written confirmation of the name and address of the Project Engineer assigned. (The Region may rely on the special provisions and forego this letter, unless a change is made.) If a letter is sent, the Contractor should be reminded to send all correspondence and forms regarding the project to the Project Engineer.

The Project Engineer is then responsible for enforcement of the contract specifications and provisions and the completion of all work according to the plans. The Project Engineer supervises the work of WSDOT personnel assigned to the project and ensures that they perform their work in accordance with the Plans, specifications and all applicable WSDOT policies. The Project Engineer is responsible for keeping complete and accurate records of all construction data and work progress, preparing progress and final estimates, and preparing other records necessary for a complete documentation of the project, including a performance evaluation of the Contractor (see Chapter 1-2.8F).

Changes made to the project or substitutions for work detailed in the contract plans or specifications, must be made in accordance with the requirements of Section 1-04 of the *Standard Specifications* and the guidance provided by Chapter 1-2.4C of the Construction Manual. The Project Engineer should review the project on a regular basis with the Regional Maintenance personnel so they have an opportunity to present any maintenance problems that may arise.

1-2.2B Responsibility as a Public Official

The Project Engineer is responsible for a project that is affected by Federal, State, Tribal, and local laws, ordinances, and regulations. While no one could be familiar with every requirement, the Project Engineer should seek to understand as much as possible. Beyond that, the prudent Project Engineer will look for guidance and seek information related to whatever current issue is at hand. Legal requirements could affect State employees, those employed by the Contractor in performing the work, the materials to be incorporated, the equipment that is used on the project, or could otherwise affect the conduct of work.

If the Project Engineer discovers that any provision of the contract, plans, or specifications appears to be inconsistent with a law, ordinance, or regulation, the inconsistency should be investigated and, if appropriate, referred to the

Region Construction Manager. The Project Engineer should, at all times, strive to comply with all laws, ordinances, and regulations.

1-2.2C Relationship With the Contractor

The Project Engineer must be familiar with the conditions of the contract, special provisions, and specifications for the work. The Project Engineer must attend to any reasonable request of the Contractor, i.e., furnishing grades, stakes, plans, etc., whenever necessary and within reason. In general, the Project Engineer should do all things necessary to enable the Contractor to work to advantage and without delay. The Project Engineer should not set any stakes or furnish to the Contractor any plans which are the responsibility of the Contractor to set or provide. The Project Engineer must ensure that the Contractor performs the work in accordance with the contract provisions, plans, and specifications.

Integrity on the part of all employees is essential. The attitude of the Project Engineer and staff toward the Contractor and the Contractor's personnel should be one of cooperation, consistent with the requirements of the specifications. It should be recognized that both the State and the Contractor have explicit rights under the contract and that those rights must be respected by both parties. The Contractor is generally trying to fulfill the contract honestly, and errors or difficulties which may arise are usually due to a lack of information or a misunderstanding. If conflict should occur, the Project Engineer should make every effort to determine the cause of the conflict and make appropriate corrections.

1-2.2D Relationship With Other Government Agencies

Other agencies responsible for such things as flood control, land development, stream navigation, pollution, etc., may be affected by the work. The Project Engineer should attempt to determine that the Contractor has complied with all regulations known to be in effect. The Project Engineer is encouraged to obtain a copy of commitments from the project design file. This should be available from a region or project design office. This file should contain environmental permits, real estate commitments, utility commitments, design deviations, and other good important information. When the Contractor is specifically required by the contract to obtain an approval document from other agencies, the Project Engineer must confirm that the document was received. Other approvals required of the contractor, but not mentioned in the contract documents should be confirmed to the extent that the requirements are known and the confirmation is possible. If a representative of an agency visits the project, the Project Engineer or an inspector should accompany the representative on the visit.

In carrying out construction work in forested areas, the Project Engineer should encourage the Contractor to comply with all Federal and State forest rules and regulations governing the protection of forests and the prosecution of the work within both national and State forests. The Contractor must take all precautions necessary to prevent and suppress forest fires. The Project Engineer shall report to the nearest forest fire warden at the earliest possible moment, the location and extent of any fire and shall take immediate steps to control the fire if practicable.

Construction work in or near streams, rivers, or other bodies of water may require a permit from the State Department of Fish and Wildlife. In an agreement with the agency, for each project requiring a Hydraulics Project Approval (HPA) (RCW 75.20.100), the State Department of Fish and Wildlife will issue the permit to WSDOT only and not to its contractor. One representative of the State Department of Fish and Wildlife will be assigned to coordinate requirements with the Project Engineer. The permit is specific to the work provided for in the contract itself and will not cover other work in support of the project, such as operations in Contractor staging areas, material sources, or waste sites. When a Hydraulics Project Approval has been obtained for the project, and the permit has not been incorporated into the contract documents, the Project Engineer shall provide copies of the permit to the Contractor and ensure it is properly posted at the work site at all times work is in progress. The Project Engineer should ensure that both the intent and the specific provisions of the permit are rigidly enforced. If the Contractor's method of operations, weather conditions, design changes, or other factors affect waters of the State in ways not anticipated or represented in the Hydraulic Project Approval, the Project Engineer will work with the assigned representative and the Contractor to modify the existing permit or obtain a new or revised one as appropriate.

The U.S. Department of Labor, Mine Safety and Health Administration, Metal and Non-Metal Mine Health and Safety Division, 3633 136th Place SE, Suite No. 206, Bellevue, Washington 98006, (206) 553-7037, must be notified at the beginning and closing of all mining operations. This includes surface mining, such as our normal pit site operations. Notification is required for all crusher operations and for all pits and quarries, including borrow pits, which are separated from the roadway under construction. The Project Engineer is responsible for this notification for WSDOT furnished pits and must submit the required report as soon as the date of opening or closing can reasonably be determined. The Contractor is responsible for notification for all pits and quarries not furnished by WSDOT. The Bureau of Mines reports are in addition to reports required by the Department of Natural Resources.

Whenever construction work is performed in navigable waterways, it is necessary to obtain a construction permit from the Coast Guard. One of the requirements of the construction permit is regular submission of Bridge Construction Progress Reports. Two copies of the report should be prepared by the Project Engineer sufficiently in advance of the first working day of the month and transmitted to the Olympia Service Center Bridge and Structures Engineer. When a Coast Guard permit modification is proposed (by the Contractor or WSDOT), it shall be submitted to the Bridge and Structures Engineer for processing through the Coast Guard. The time required for approval/disapproval of the proposed permit modification is variable and depends on the nature and significance of the modification. Up to six months may be required. When all construction obstructions

Preconstruction Communication Checklist
Contract Number: _____
Project Engineer: _____
Contractor: _____

Subject	Communication Type (Letter, Min. of Mtg., Info. Packet, Diary) Completed (Date)	File Location
A. Contractor-WSDOT Relationships	_____	_____
1. General Discussion	_____	_____
2. Contractor Performance Ratings	_____	_____
B. Environmental Commitments	_____	_____
1. Commitment Files	_____	_____
2. Contract Provisions	_____	_____
3. Rock Crushers	_____	_____
C. Order of Work and Schedules	_____	_____
1. Discuss Plans for Prosecution	_____	_____
2. Formal Schedule Required	_____	_____
D. Subcontractors and Lower Tier Subs	_____	_____
1. General Discussion	_____	_____
2. Condition of Award	_____	_____
3. Paperwork Process	_____	_____
4. WSDOT/Prime/Sub Relationship	_____	_____
5. Correspondence through Prime	_____	_____
6. Prime represented on site	_____	_____
7. WSDOT will address sub concerns	_____	_____
E. Utilities, Railroads, and Other Third Parties	_____	_____
1. Existing Agreements described	_____	_____
2. Commitments, Obligations, Notices	_____	_____
3. Underground Locater Service	_____	_____
4. Insurance requirements	_____	_____
F. Safety and Traffic Control	_____	_____
1. Discuss Contractor's Safety Program	_____	_____
2. Traffic Control Requirements	_____	_____
3. Police Relationships	_____	_____
4. Job-Specific Safety Concerns	_____	_____
5. Off-site Hauling Restrictions	_____	_____
G. Control of Materials	_____	_____
1. Source Approvals Needed	_____	_____
2. Acceptance Procedures	_____	_____
3. Fabricated Items	_____	_____
4. Installation without Certifications	_____	_____
H. Other Submittals	_____	_____
1. Job-Specific List and Discussion	_____	_____
2. Delay of 1st Progress Payment	_____	_____
I. Equal Employment Opportunity and Training	_____	_____
1. Contract EEO Requirements	_____	_____
2. Contract Training Requirements	_____	_____
3. Training Plan/Trainee Appr. Process	_____	_____
4. Monitoring and Reporting	_____	_____
J. Wage Rate Administration	_____	_____
1. Prevailing Rates Required	_____	_____
2. Payrolls, Wage Rate Interviews	_____	_____
3. Davis-Bacon investigations	_____	_____
K. Forms	_____	_____
1. Describe Req. Forms, Provide Supply	_____	_____

Figure 1-4

to navigation have been removed, the Project Engineer shall report that fact immediately to the Bridge and Structures Engineer indicating the date removal was completed. Upon completion of all permitted bridge work, a final report indicating the date of completion and certifying that the bridge has been constructed in compliance with the Coast Guard Bridge Permit shall be submitted by the Project Engineer to the Olympia Service Center Bridge and Structures Engineer.

1-2.2E Relationship With Public and Private Utilities

In some cases, utility adjustments will be completed prior to contract work. In other cases, adjustments are to be made concurrently with the work. The Project Engineer and the Contractor should contact public utility companies, individuals, and others owning or maintaining utility features within the limits of the highway right of way and confirm the relationship and the terms of the relocation agreements. Where the feature will require adjustment during construction, notice should be provided far enough in advance to allow the utility to perform the adjustment without affecting the Contractor's work schedule.

Utilities should have been given prints of the preliminary plans, prior to awarding of the contract, showing grade lines and right of way to enable them to prepare plans and estimates for making the necessary changes to their facilities in as timely a manner as possible. The Project Engineer should determine that plans for the work have been made, that the relocated facilities will be clear of the construction, and that the utilities coordinate with the Contractor's operations to the fullest extent possible.

When utilities are known to exist within the limits of the project and are not planned for relocation but may be affected by the Contractor's construction activities, the Project Engineer and the Contractor should become familiar with the requirements of RCW 19.122, Underground Utilities. The Project Engineer may wish to obtain copies of the RCW for review at Preconstruction Meetings.

The approximate locations of most existing underground utilities are shown on the contract plans. However, the existence of some underground utilities may not have been known or detected during design. If a one number locator service is available, the Contractor must utilize it in an attempt to locate all affected utility features. If no one-number locator service is available, notice shall be provided individually to those owners of underground facilities known to have or suspected of having underground facilities within the area of proposed excavation. Even areas covered by a one-number service may contain utilities not included in the service. If the Contractor discovers underground facilities which are not identified, the Contractor shall cease excavating in the vicinity of the facility and immediately notify the owner or operator of such facilities, or the one-number locator service.

1-2.2F Responsibility for Coordination of Railroad Agreements

When railroads are involved within the project limits, an agreement covering the work involved is usually entered into between WSDOT and the Railroad company. Upon identifying that the contract involves work or involvement by a railroad, the Project Engineer should immediately obtain a copy of the Railroad Agreement or contact the Region Utilities Engineer to determine the status of the agreement and to make sure it contains all elements needed to accommodate the construction of the project. If an agreement has not been made with the railroad, the Project Engineer should coordinate and monitor the development and processing of the agreement through the Region Construction and Region Utilities Engineers. Where notices are required. The Project Engineer should ensure that proper notice is provided to the railroad company and that such notice is acknowledged by them. The Project Engineer should work with the Region Construction and Region Utilities Engineers to resolve any conflicts with the Railroad Company and prevent delays to the Contractors operations.

1-2.2G Responsibility for Railroad Encroachment Insurance

Projects which include work on railroad right of way generally require special insurance protection. Pay particular attention to the Contract Special Provisions for project requirements because they vary from project to project. It is the responsibility of the Project Engineer to enforce the provisions. The required insurance documents are to be furnished by the Contractor (usually through the Project Engineer) to the OSC Accounting Office who will (a) review the documents and (b) obtain approval of the insuring documents from the railroad company. Written notification of approval by the railroad company will be furnished to the Project Engineer by the OSC Accounting Office as soon as approval is obtained.

No work shall be started on railroad property until the necessary approvals have been obtained. The railroad insurance must be maintained until the date of physical completion of the project unless otherwise stated. However, the Contractor may make a written request to be relieved of the responsibility to continue all or part of the railroad protective liability insurance before the completion date under certain conditions. The details and conditions for this relief are specifically set forth in the special provisions of the contract. If the Contractor should make a request for relief, the Project Engineer should contact the Region Construction Manager and Utilities Engineer for guidance and assistance in coordinating this effort with the railroad.

1-2.2H Responsibility for Coordinating Work With Other Contracts

When two or more Contractors are working in the same area, Section 1-05.14 of the *Standard Specifications* will apply. The Contractor shall not cause any unnecessary delay or hindrance to the other contractors on the work, but shall cooperate with other contractors to the fullest extent.

Progress schedules and plans for all contractors involved should be reviewed by the Project Engineer to detect possible conflicts which might be resolved before a delay of work is experienced or extra costs are incurred as a result. If an adjacent project requiring coordination is known prior to holding a Pre-Construction meeting, it would be beneficial to invite principals from that project to the conference.

1-2.2I Responsibility for Enforcement of Safety and Health Requirements

1-2.2I(1) General

All contractors doing work for WSDOT must provide safety controls for the protection of life and health of the Contractor's employees and other persons, for the prevention of property damage, and for the avoidance of interruptions in the performance of the work under the contract. As the owner-contracting agency, WSDOT has the responsibility for enforcement of the provisions of the contract, however, provisions and regulations which are by law the fundamental responsibility of other agencies, both from the standpoint of interpretation and enforcement, should be monitored by WSDOT, but with full recognition as to the responsibilities and authorities of those agencies. The Project Engineer will cooperate fully with the responsible agency.

Any violations noticed by the Project Engineer will be brought to the attention of the Contractor for correction. The Project Engineer will also notify the responsible agency (if that action is deemed necessary by the Region Construction Manager) and utilize such sanctions as are consistent with contract terms in assisting the responsible agency in enforcing laws, rules, and regulations.

The Contractor is obligated by law to comply with both State and Federal safety regulations. State regulations are administered by the Washington State Department of Labor and Industries under the Washington Industrial Safety and Health Act (WISHA). Federal regulations are administered by the Occupational Safety and Health Administration (OSHA) and the Mine Safety and Health Administration (MSHA) of the U.S. Department of Labor, which has jurisdiction over Federal safety requirements for pit and quarry operations up to the point where materials leave the quarry area or go into a batch plant. Inspectors from any or all of these agencies may review the Contractor's operations at any time. (See Section 1-07.1 of the *Standard Specifications*.) In order to fulfill WSDOT obligations to monitor contract operations in accordance with the above, the following procedures should be followed on both Federal-aid and non Federal-aid contracts.

1-2.2I(2) Precontract Preparation

- The Project Engineer shall obtain the WISHA manuals, particularly Safety Standards for Construction Work WAC 296-155, General Safety and Health Standards WAC 296-24, and General Occupational Health Standards WAC 296-62, and shall review them with the key field WSDOT inspectors to ensure reasonable familiarity to the extent that they can recognize important requirements.
- The Contract Plans and contract provisions should be reviewed to identify those aspects of the work meriting special attention from the standpoint of potentially dangerous types of work and hazard elimination.

1-2.2I(3) Preconstruction Duties

As part of the required Preconstruction Meetings and Discussions (see Chapter 1-2.1C), the Contractor's safety program should be discussed. Some of the things that the Project Engineer may want to consider are:

- The contractual obligation of the Contractor for complying with State and Federal construction safety standards. (See Section 1-07.1 of the *Standard Specifications*.)
- The availability of the safety standards that apply to the contract.
- The accident prevention program of the Contractor — organization, staff, names of responsible individuals, meetings, training, reports, etc. A review of specific areas for which plans are required (especially those also affecting WSDOT personnel). These might include Fall Protection, Confined Spaces, Respirators, Hearing, and Hazardous Materials plans. Implementing a mechanism for employees to report "near misses" and/or work zone accidents.
- The Contractor's responsibility for seeing that subcontractors comply with safety regulations.
- The Contractor's plans for meeting specific safety requirements and for eliminating potentially critical hazards on the project.

1-2.2I(4) The P.E.'s Role in Safety on the Project

It is difficult to generalize about safety. It's a judgment call which is dependent on risk, knowledge, authority to direct corrections, etc. As a person, a professional and a representative of the State, the Project Engineer has an obligation to take action if they become aware of a situation that presents an immediate threat. Project Engineers should advise their employees on what the lines of communication are and what the procedures are for alerting the responsible agencies with regard to serious safety hazards.

Employees should be made aware that the Contractor is obligated to make the work-site safe, to their satisfaction, for inspection activities. Anyone who is uncomfortable with access for inspection should inform their supervisor of the situation and expect resolution. Project personnel should also be made aware of project specific hazards and be trained in specific areas as the project warrants. For example; fall protection, confined space requirements, respirator training, lead paint hazards, hazardous material training, and exposure to medical waste (sharps). It is suggested that the expertise of the Regional Safety Officers or Olympia Service Center Safety Office be utilized as appropriate.

Additional information, such as safety regulations and Department of Labor and Industry (L&I) contacts, are available on the Internet at *http://www.wa.gov/lni/*. Keep

in mind that many WSDOT employees are not trained to interpret and apply safety regulations, however, employees need to have a reasonable understanding of what hazards may be encountered on a project. Many, but not all, of the requirements are listed under Chapter 296-155 WAC, "SAFETY STANDARDS FOR CONSTRUCTION WORK" under the various "Parts A through V".

State L&I offers consultation service (advise is given) and enforcement (assessment of a violation would result in a citation being issued). A listing of phone numbers for the various L&I field offices is as follows:

- REGION 1 Offices
  Bellingham Field Services Location 360 647-7300
  Everett Field Services Location 425 290-1300
  Mount Vernon Field Services Location 360 416-3000
- REGION 2 Offices
  Bellevue Field Services Location 425 990-1400
  Seattle Field Services Location 206 281-5400
  Tukwila Field Services Location 206 248-8240
- REGION 3 Offices
  Bremerton Field Services Location 360 415-4000
  Port Angeles Field Services Location 360 417-2700
  Tacoma Field Services Location 253 596-3800
- REGION 4 Offices
  Aberdeen Field Services Location 360 533-8200
  Longview Field Services Location 360 575-6900
  Tumwater Field Services Location 360 902-5799
  Vancouver Field Services Location 360 896-2300
- REGION 5 Offices
  East Wenatchee Field Services Location 509 886-6500
  Kennewick Field Services Location 509 735-0100
  Moses Lake Field Services Location 509 764-6900
  Okanogan Field Services Location 509 826-7345
  Walla Walla Field Services Location 509 527-4437
  Yakima Field Services Location 509 454-3700
- REGION 6 Offices
  Colville Field Services Location 509 684-7417
  Pullman Field Services Location 509 334-5296
  Spokane Field Services Location 509 324-2600

1-2.2I(5) Pedestrian Safety

When the work area encroaches upon a sidewalk, crosswalk, or other areas that are near an area utilized by pedestrians or bicyclists, special consideration should be given to their accommodation and safety. Pedestrians are more susceptible to personal injury in work areas than are motorists. Visibility and recognition of hazards is an important requirement for the safety of pedestrians and bicyclists.

Protective barricades, fencing, handrails, and bridges, together with warning and guidance devices, should be used so that pathways for pedestrians, bicyclists, equestrians, and other non-motorists are safe and well defined. Where walks are closed by construction or maintenance, an alternate walkway should be provided where feasible. Where it is necessary to divert pedestrians into the parking lane of a street, barricades and delineation should be provided to separate the pedestrian walkway from the adjacent traffic lane. Pedestrians should not be diverted into a portion of the street used by vehicular traffic. At locations where adjacent alternate walkways cannot be provided, pedestrians can be diverted across the street by placing appropriate signs at the construction limits and at the nearest crosswalk or intersection. When hazardous work conditions exist overhead, it may be necessary to install a fixed pedestrian walkway of the fence or canopy type to protect and control pedestrians. In such cases, wood and chain link fencing can be used with warning lights and illumination to warn and guide both pedestrians and motorists. These accommodations for pedestrians and bicycles should be included in Traffic Control Plans.

Fences around a construction area are often necessary and may be a requirement of the local jurisdiction building code. They are often constructed in conjunction with a special pedestrian walkway or when there are deep excavations or when pedestrian access to the job site is not desirable. Installation of such fencing must take into account relocation of existing control devices and facilities such as traffic signals, pedestrian signals, traffic signs, and parking meters. The use of chain link fencing which can be seen through may be needed at intersections to provide adequate sight distance.

Relocating a walkway without unreasonable inconvenience to pedestrians, residents, or commercial interest, is the safest practice of all. Remember, however, that pedestrians like to "see what's going on". Simply denying them access does not, of itself, prevent their encroachment onto the worksite. Sometimes it is advisable to design and construct a pedestrian observation area for this purpose.

1-2.2J Responsibility for Environmental Considerations

During the precontract period, the Project Engineer should obtain copies of the final Environmental Impact Statement and any special environmental studies related to the project. It is important that all key personnel become familiar with the environmental decisions considered during the design process. The contract documents should include necessary provisions for protection of the environment, including requirements that the Contractor secure permits from and abide by regulations of appropriate Federal, State, and local agencies. Any changes in contract work that may become necessary must also be reviewed to ensure conformance with the original intent, requirements, and commitments established during the environmental design of the project.

1-2.2K Responsibility for Posting Required FHWA and State Labor and Industries Job Site Posters

A combination of both State and Federal laws require that on all WSDOT administered contracts some or all of the posters listed below are to be posted at the place of employment such that all employees have ready and free access to inspect their contents. The Project Engineer should shall ensure the Contractor complies with these requirements.

- FHWA 1495 and 1495A — Wage Rate Information
- FHWA 1022 — Fraud Notice Poster
- OFCCP-1420 — Equal Employment Opportunity is the Law
- WISHA P416-081-000 — Job Safety and Health Protection
- P242-191-000 — Notice to Employees (L&I)
- F700-074-000 — Your Rights as a Worker
- EMS 9874 — Notice to Employees (Emp. Security)
- Copy of approved Statement of Intent to Pay Prevailing Wages
- Copy of prevailing wage rates from the contract provisions

If Federal funds are involved, all of these posters are required. If only State funds are involved, the first three do not apply. After contract execution and before work begins, the Contractor should be given a package containing the appropriate required job site posters. This package should also be accompanied by either a written or verbal explanation of the contents and include notification that the Contractor, each subcontractor, and each lower tier subcontractor will have to post a copy of the State L&I approved Statement of Intent to Pay Prevailing wages. This action shall be specifically noted in the project records.

1-2.2L Responsibilities When Working on Tribal Lands

Indian nations have the political distinction of being sovereign. This is different from being designated as having protected group status based on racial classifications. Being sovereign, tribes have the ability to create and enforce tribal ordinances such as Tribal Employment Rights Ordinances (TERO). These are legal requirements pertaining to work within the boundaries of the reservation which are enforced by the respective tribes. When a contract includes work on a reservation, the project should include a general special provision "Indian Preference and Tribal Ordinances" that alerts the contractor to the possibility that TERO requirements may apply and provides a contact person for the tribe. The provision also reminds the contractor to bid any costs associated with TERO compliance into associated items of work. TERO requirements may take a variety of forms, some of which are listed in the noted provision. The provision also notes that complying with TERO requirements shall not be a violation of the contract equal employment opportunity requirements. The end result is that the contractor is expected to comply with TERO requirements as they would any other legal obligations. The underlying intent is to reduce Indian unemployment and most tribes are willing to work with contractors to best meet this goal. We want to avoid creating any contractual requirements that interfere with their ability to do so. Our role is to assist in communication but not become involved in determining or paying the tax.

1-2.3 Construction Traffic Control

1-2.3A Public Convenience and Safety

Under the many special conditions encountered where traffic must be moved through or around construction operations, serious problems of traffic control can occur. Most conditions are temporary and are, therefore, dangerous and difficult to deal with because they are unexpected and not in accordance with the normal pattern of highway traffic. Section 1-07.23(1) of the *Standard Specifications* requires the Contractor to conduct all operations with the least possible obstruction and inconvenience to the public and to provide adequate safeguards, safety devices, protective equipment, and any other needed actions to protect the life, health, safety, and property of the public. The responsibility to comply with these requirements is the Contractor's. It is the Project Engineer's responsibility to ensure that the Contractor complies.

1-2.3B Public Information and Customer Focus

Most drivers still have the expectation of proceeding to their destination with little or no delay even though traffic conditions on many of our highways are deteriorating, primarily due to increased traffic volume. This increased volume may create congestion, delays, accidents and aggressive driving during normal daily operation. Highway construction will usually require a more restricted roadway to accommodate work zones and can further reduce traffic mobility and safety. Even some of our lower volume rural highways can present a challenge due to factors such as drivers not expecting construction work and seasonal/recreational traffic increases. Construction and user delays present significant costs in addition to costs associated with crashes and worker safety. These delays and costs can be minimized by implementing a traffic control strategy based on traffic conditions and construction requirements, and which includes public information and customer focus considerations.

Our goal on every highway construction project should be to provide the best overall balance of work zone safety and traffic mobility while constructing quality highway projects. Much of our effort is directed at engineering responses to safety and mobility issues and is generally included in the contract requirements. Recent customer-focused highway construction studies have shown that accurate and timely project information is a valuable element in an overall traffic control strategy. Advance planning and coordination between the project engineer and contractor is necessary to ensure that there is an opportunity to provide public information for all phases of the project that impact traffic. Proper use of public information and customer-focused techniques will provide safety and mobility benefits that would not otherwise be gained, as listed below:

- Alert drivers to potential delays by advance notice through project signing and the news media that would allow drivers to take alternate routes, adjust scheduled trips and have better awareness of traffic impacts and how to avoid them.

- Provide benefits to the Contractor from reduced traffic volume and better driver awareness through fewer crashes, less material delivery delay, better worker safety, fewer complaints and overall public acceptance of the project.
- Achieve better driver acceptance, reduced aggressive driving and improved work zone credibility by minimizing delays and providing accurate and timely information.
- Consider innovative construction techniques and shorter term intense work stages with more severe traffic restrictions, such as weekend closures, if possible.
- Closely monitor traffic conditions when traffic is restricted to determine the need for any traffic control or work hour adjustments that would improve traffic flow. Specified working hours and the accompanying traffic restrictions are critical elements of the project traffic control strategy and should not be adjusted without proper traffic analysis.
- Maintain ongoing communication during the life of the project with local law enforcement, emergency services, local agencies, transit groups, affected local businesses, etc.
- Continue use of innovative devices such as portable, changeable message signs, project information signs with information phone number and highway advisory radio systems.

The Regional Construction Manager, Traffic Engineer, and Public Information Officer should be involved in the project traffic control strategy and may be able to offer assistance.

1-2.3C Work Zone Traffic Control

1-2.3C(1) General

The primary function of work zone traffic control is to move vehicles and pedestrians safely through or around work zones while protecting on-site workers and accommodating the Contractor's construction operations.

The "General" requirements for traffic control (Section 1-10.1 of the *Standard Specifications*) address the responsibility to provide adequate traffic control measures at work zones as follows:

- No work shall be done until all necessary signs and traffic control devices are in place and/or conflicting and confusing signs are covered.
- If the Contractor does not provide necessary traffic control, WSDOT may do it and deduct the cost from the Contractor's payments.
- The Contractor is responsible regardless of whether or not WSDOT orders, furnishes, or pays for necessary traffic control.

It is important for the Project Engineer to ensure that all necessary signs and other traffic control devices are properly placed at all times so that the traveling public is made aware of all deviations from the normal traffic conditions and is furnished adequate direction and guidance to permit safe travel through the construction area.

1-2.3C(2) Traffic Control Management

"Traffic Control Management" (Section 1-10.2 of the *Standard Specifications*) addresses the requirements and duties of the Contractor's designated Traffic Control Manager (TCM) and Traffic Control Supervisor (TCS). The Contractor has the responsibility for managing traffic control and providing safe traffic control measures that are appropriate for the type of work and consistent with the requirements of the contract plans and specifications. The Contractor's traffic control work is a contract item. Just like all other contract items, it must be inspected for adequacy and conformance with the contract. Once it is performed and inspected, it must be paid for. If the Contractor elects to delegate the TCM duties to a subcontractor, it is recommended that the Project Engineer initiate a meeting with the Contractor to clarify TCM duties and how those duties will be accomplished. Actions taken by the TCM have a direct impact on the Contractor's and subcontractors' work operations. The process for coordinating and approving those actions must be well defined and consistent with the contract requirements.

The TCM and TCS work together with the Project Engineer and WSDOT's designated TCS to address traffic control issues as the work progresses. Planning and coordination of the Contractor's work efforts with appropriate traffic control measures are the primary responsibilities of the TCM. It is also the responsibility of the TCM to ensure that any Contractor proposed Traffic Control Plans (TCPs) needed to implement the Contractor's work operations are approved in advance and the necessary resources to implement the TCP are available. The TCS ensures that the traffic control measures shown on the approved TCPs are properly implemented, operating, and documented on the project. The Contractor's TCS may not be required full time on the project, but is required to perform all the duties required by the specifications. When the Contractor is working multiple shifts, it may be necessary to have more than one person assigned as a TCS.

WSDOT will also provide a Traffic Control Supervisor. It is intended to have qualified, trained representatives from both the Contractor and WSDOT work together to achieve safe traffic control operations on the project. When reference is made to the "Traffic Control Supervisor (TCS)" in this manual or the *Standard Specifications*, it shall mean the Contractor's Traffic Control Supervisor unless stated otherwise.

1-2.3C(3) One-Way Piloted Traffic Control Through Construction Zones

The major points to note in Section 1-10.3(6) of the *Standard Specifications* are:

- The provision does not limit one-way piloting to treated bases, surface treatments, and pavements. Piloting can be used in other operations, such as grading, when appropriate;

- The "pilot car control area" is any one area or section of the project controlled by pilot car operations. There can be more than one area or section and there can be more than one pilot car and driver in each area or section, however, each "pilot car control area" will be addressed separately, accumulating the total hourly payment on the contract;
- When the contract does not stipulate a pilot car operation (i.e., bid proposal does not include such an item,) a new item can be established by change order if the Engineer deems that method of traffic control to be most appropriate; and
- Regardless of any flagging or piloting services furnished by WSDOT, responsibility for protection of the work and traffic remains with the Contractor.
- A careful appraisal of the pilot car operation may indicate the need for adjustments in work zone length or other features that may be contributing to congestion. The Contractor's work operation should generally be restricted to one side of the roadway and not interrupt the alternating traffic movement.

1-2.3C(4) Construction and Maintenance of Detours

Construction zone detours will normally be detailed in the plans. When detours not shown in the plans are required, the design will likely be done by the construction office under the direction of the Project Engineer and requirements of the MUTCD. If the detour is a full-fledged roadway, the design should be checked by design and traffic reviewers. Short-term minor detours may be installed and operated without formal review, but the Project Engineer must be satisfied that the facility is suitable and safe for traffic use.

Existing pavement markings on asphalt pavement should never be merely blacked out with oil or paint. Rather, the striped and adjacent areas should be sandblasted or ground in a pattern different from the original marking until the marking is no longer visible. This change in pattern minimizes the possibility that the original marking will still be visible to drivers, especially at night or in rainy weather when covered-over stripes have a tendency to shine in contrast to the pavement. Temporary pavement marking tape, either for temporary lane marking or masking of existing markings may offer another option.

Barricades and barriers are inherently fixed object hazards. Therefore, they should not be used unless the combined hazard for the motorist and the workers of operating without barriers is greater than the hazard of striking the barriers themselves. They should not be used as primary delineation to guide traffic. Delineation devices must be maintained, and kept clean. When delineators become covered with grime or are damaged, they become ineffective. The condition and positioning of these devices should be checked daily.

1-2.3C(5) Road/Ramp Closures

When it is necessary to close a road, street, or ramp, the Project Engineer shall submit a request that includes the appropriate closure/detour plan to the Region Traffic Engineer in advance of the need. Per RCW 47.48.010, the Regional Administrator may close a road, street, or ramp.

With proper planning and implementation, road/ramp closures can be an effective and safe method of traffic control. As required by RCW, notice of the closure shall be published in one issue of a newspaper in the area in which the closure is to take place. Signs indicating dates and times of the closure shall be placed at each end of the section to be closed on or before publishing the notice in the newspaper. Publishing the notice and placing of the signs shall be a minimum of three days in advance of the closure. Advance notice using local radio, portable changeable message signs or HAR may be effective in diverting traffic from the closed or impacted locations. Coordinate with the Region Public Information Officer for assistance with public notification.

In cases of emergency, or closures of 12 hours or less, the road, street, or ramp may be closed without prior notice to the public. If possible, a notice should be posted one working day in advance of the closure.

1-2.3C(6) Traffic Control Plans

"Traffic Control Plans" (Section 1-10.2(2) of the *Standard Specifications*) addresses the requirements of Traffic Control Plans (TCP). The Contractor, working in coordination with the TCM, must adopt the TCPs appearing in the contract or propose modified TCPs to be used for the project. The Contractor must submit proposed modifications to TCP's at least ten calendar days in advance of the time the signs and other traffic control devices will be required. Approval of these plans must be obtained before the work can begin.

Minor modifications to the TCP may be made by the Traffic Control Supervisor to accommodate site conditions. Modifications or adjustments to the plan must maintain the original intent of the plan. When there is a change in the intent and/or substantial revisions are needed, a revised TCP shall be submitted for approval through the TCM to the Project Engineer. The Regional Traffic Office should be consulted when this situation occurs.

Traffic Plans should not only address all work zones and standard devices and signs but should also address issues such as:

- conflicting or temporary pavement markings
- maintaining existing operational signs and covering conflicting signs
- staging requirements
- temporary vertical or lateral clearance restrictions
- temporary work zone illumination
- consistency with any work hour restrictions
- position of positive barriers for traffic hazards or worker protection
- vertical drop-offs
- work zone access

- intersection or access control (traffic signals, road approaches)
- pedestrians and bicycles

If the Contractor's method of operation or the work area conditions require other than minor modification of the specific TCP appearing in the contract or any of the TCP's previously designated and adopted by the Contractor, the Contractor shall submit through the TCM a proposed modification of the TCP for approval. If the Contractor's proposed modifications comply with the MUTCD requirements and is consistent with contract requirements as well as State and Region policy, the Project Engineer may approve these proposed modifications. If the Contractor's proposed modifications do not comply with the MUTCD requirements, the Project Engineer should consult with the Region Traffic Engineer.

If there is any doubt that the proposed TCP complies with the MUTCD or provides for the safe movement of traffic, the Project Engineer shall consult with the Region Traffic Engineer or the Region Construction Manager.

1-2.3C(7) Conformance to Established Standards

Conformance to Established Standards (Section 1-10.2(3)) addresses the requirements for standards and condition of flagging, signs, and all other traffic control devices. In addition to standards established in the latest adopted edition of the *"Manual on Uniform Traffic Control Devices"* (MUTCD) and/or as specified in the contract plans, the "National Cooperative Highway Research Project, 350" (NCHRP 350) has developed requirements for safety of four categories of traffic control devices. Category 1 devices consist of small lightweight devices that generally do not present a hazard. Typical Category 1 devices are cones, tubular markers, and plastic drums with no attachments. Conformance to NCHRP 350 for Category 1 is described in Section 1-10.2(3) and applies only to those devices purchased by the Contractor after January 1, 2000. The Contractor is required to keep the manufacturer's certification document on file and available for inspection if needed. Inspection of certification documents by WSDOT is not routinely required but should be considered if operational or safety issues are observed.

Category 2 contains devices that are more hazardous due to their rigid construction, such as barricades, portable sign stands, intrusion alarms, and drums with lights. Implementation of requirements for Category 2 devices is presently planned for Fall of 2000.

Category 3 devices are fixed or substantial in mass and could cause significant damage to a vehicle or its occupants. Devices such as barriers, fixed sign supports, and TMAs are included in this category. WSDOT approved devices in this category currently meet NCHRP 350 standards.

Category 4 devices are typically trailer or truck mounted and could cause significant damage if impacted by an errant vehicle. Devices such as arrow boards, PCMS, portable signals, and portable lighting units are included in this category. Implementation of requirements for Category 4 devices is presently planned for Fall of 2002.

1-2.3C(8) Construction Signs

Construction Signs (Section 1-10.3(3) of the *Standard Specifications*) divides construction signs into two categories, Class A and Class B, and lists the work required for the Contractor. A specific pay item is provided for the Class A signs. The only payment for Class B signs is for the labor utilized for daily set up and removal.

The Project Engineer will arrange to furnish all necessary standard signs and see that they are erected and maintained in proper condition during the period of need. Before providing the Contractor with State furnished signs, the Project Engineer should reject any signs which are unacceptable as determined by the ATSSA Quality Standards for Work Zone Traffic Control Devices. Inform the Regional Stores Manager of the unacceptable signs upon rejection in order to prompt proper refacing or disposal of these signs. As soon as the need for any sign is ended, the Project Engineer can require the Contractor to remove the sign and return it to WSDOT in good condition. All signs lost, damaged, or destroyed by the Contractor shall be replaced in kind or their value may be deducted from payments due or coming due the Contractor. Some contracts specify Contractor-provided signs, where the Contractor is required to furnish the signs as well as perform the installation, placement and removal.

At no time should signs be left in traffic control position during periods when they are not necessary to traffic safety. Indiscriminate use of traffic control signs soon destroys public confidence and respect for the signs. Unnecessary traffic restriction and inconvenience tends to reduce the effectiveness of all signing and causes difficulty in enforcement by authorities. The Project Engineer should ensure that signs are removed or completely covered with metal or plywood during the hours they are not needed, either before or after working hours and on nonworking holidays or nonworking weekends.

Signs needed for moving work zones should be relocated as the work unit moves so that the length of the restriction area is kept to the minimum required. A warning sign too far in advance of the work area has little value. It is also necessary to inform the motorists when they have left the restriction area. If the end of this restriction area is the end of the project, the Class "A" "END ROAD WORK" sign should be sufficient. If the restriction ends within the project limit, a reverse taper of traffic cones ending the lane or shoulder closure or a portable "END ROAD WORK" sign is adequate. If traffic congestion extends past the first advance warning sign, the sign should be moved back or another sign installed to provide adequate warning. Turning signs away from oncoming traffic is not adequate since traffic approaching from other directions may be exposed to the sign.

Signing for nighttime traffic is more difficult than that required for daylight hours. All signs used during the hours of darkness shall be reflectorized. A review of the project signing should be made and recorded during the hours of darkness.

Signs and other traffic control devices should be shown on the contract TCP's and should be installed with adjustments for work zone and traffic conditions. If typical TCPs are used rather than site-specific TCPs, additional signs or devices may be needed to address the actual work zone conditions. The Contractor (TCM and TCS) and WSDOT (TCS) should ensure proper use and placement of signs and devices. For situations not addressed by the TCPs, the Project Engineer will determine who is responsible for preparing a revised TCP. Refer to the Work Zone Traffic Control Guidelines Book, MUTCD, or seek assistance from the Region Traffic Engineer for appropriate TCP revisions. A modified or new TCP may be needed if adjustments to signs and devices do not adequately address existing hazards or resolve observed traffic problems or accidents.

1-2.3C(9) Flaggers, Spotters and Traffic Control Labor

- FLAGGERS

  Typically, flaggers have the highest exposure to traffic hazards and are more frequently injured or killed than other workers. Flaggers should only be used when all other forms of traffic control are inadequate to control traffic. When flaggers are used, flagging stations must be shown on the TCP along with the required warning signs and devices. Flagger stations should be protected with a positive barrier, if possible. The flagger should also have in mind an "escape plan" to avoid errant vehicles. It is not recommended to use flaggers at locations, such as freeways, where their primary function of warning or directing traffic is ineffective or not intended. Use of flaggers to exclusively display the "SLOW" message is also not recommended. Additional guidance on the use of flaggers is located in the *"Traffic Manual", "Standard Specifications" and the "Work Zone Traffic Control Guidelines Book."*

  All flaggers working on WSDOT construction projects must have a valid State of Washington flagging card or a flagging card issued by the states of Oregon or Idaho.

- SPOTTERS

  Flaggers used as spotters to protect an exposed work crew may be considered appropriate if other worker safety measures are not feasible. Before the Project Engineer approves the use of a spotter, careful evaluation of the hazards involved should indicate that the spotter can actually provide a safety benefit to the work crew without undue risk to the spotter.

- TRAFFIC CONTROL LABOR

  Workers involved in traffic control labor are required to wear high visibility clothing as specified in Section 1-07.8 of the *Standard Specifications*. For some projects, labor in addition to the assigned Flaggers is needed to install and remove traffic control in an efficient manner. The item, "Traffic Control Labor" will be measured and paid by the hour for the actual number hours performing work as described in Section 1-10.3(1) of the *Standard Specifications*. No additional hours will be allowed for relief flaggers when the regular flagger is on break except that when a TCS acts as a relief flagger for approximately 15 minutes or less, both shall be paid their respective rate through the break period. No adjustment in the hourly bid amount will be paid for overtime work.

  Portions of an hour will be rounded up to a whole hour.

1-2.3C(10) WSP Traffic Control Assistance

WSDOT has an agreement, GC9131, with the Washington State Patrol (WSP) for that agency to provide troopers and vehicles to help with traffic control on construction projects. WSP traffic control assistance is considered an enhancement to the required work zone traffic control and should be reserved for those work zones that have unusual hazards or a high degree of worker exposure to traffic which cannot be addressed by traditional traffic control means. In areas where GC9131 is not used, the WSP are usually helpful during their normal course of business.

The Project Engineer should ensure that good communication is maintained with WSP troopers assigned to the project and that the appropriate traffic control strategy is applied. On each shift of WSP traffic control assistance, Form 421-045, WSP Field Check List, shall be filled out. WSDOT will fill out the top portion of the form and give it to the WSP trooper on the project to complete. At the end of the officer's shift, the completed form shall be returned to WSDOT.

The Contractor shall not direct the activities of the WSP.

Instructions for WSP assistance are in Instructional Letter "IL 4008.00" and the *Traffic Manual* M 51-02.

1-2.3D Speed Reductions

If speed reductions are considered, the Project Engineer shall consult with the Regional Traffic Engineer in advance of the need. Per RCW 47.48.010 and Directive D55-20, the Regional Administrator may post advisory speeds and/or establish a reduced regulatory speed limit. Speed reductions must be determined in accordance with standard traffic engineering practice by the Regional Traffic Engineer.

- ADVISORY SPEED

  Within a construction area, there may be short sections of roadway, such as curves or rough roadway, which may not be safely negotiated at the established speed limit. For these areas, an advisory speed sign should be used in conjunction with proper warning signs. The speed shown on the sign is not intended as an enforceable limit but should show, in multiples of 5 miles per hour, a safe speed for normal conditions of weather and lighting. Advisory speed signs should only be used in conjunction with appropriate warning signs.

- REGULATORY SPEED LIMITS

  Traffic controls that are designed and implemented for site-specific work zone conditions, including actual traffic speed, are generally more effective than a speed limit reduction. Speed limit reductions should be

considered at work zones where conditions reduce operational safety to a point where other traffic control measures are not effective.

Directive D55-20 describes the appropriate conditions and requirements to implement advisory speeds and reduced regulatory speed limits.

1-2.3E Records of Construction Signing, Accidents, and Surveillance

Due to the increased damages being awarded by the courts for improper signing, it has become mandatory that detailed records of signing and delineation be continuously maintained on every project on sections of highway within the construction limits under traffic. The following are recommended procedures methods of recording the signing on the project:

- Use extensive photographic or videotape records.
- The Contractor's signing must adhere to the TCP, and the records must confirm that the sign installation is checked against that plan. The Regional Traffic Engineer should only be involved in significant changes to TCPs and need not be involved in minor adjustments.
- Documentation of the Contractor's activity for traffic control, including signing, should be completed by the Contractor's Traffic Control Supervisor (TCS). In accordance with the *Standard Specifications*, the TCS must maintain a daily project traffic control diary. DOT Forms 421-040A, "Contractor's Daily Report of Traffic Control- Summary", and 421-040B, "Contractor's Daily Report of Traffic Control-Traffic Control Log," are provided to the Contractor for this purpose.

  The Summary report will typically contain a brief description of the daily activities of the TCS with expanded details of any important happening such as accidents, meetings, decisions, or rapidly deteriorating conditions of traffic or weather. The Summary report is usually sufficient to verify the location and status of Class A signs once they are installed.
- The Traffic Control Log report is used to specifically identify all details of each Class B work zone setup. This includes identification of specific signs used, location of the signs, location of flaggers, location of the work zone, the time it was set up, and the time it was removed. Additional information includes cone layout, if used, comments about piloted traffic, and comments about the relationship of the setup to an approved traffic control plan.

The Project Engineer should make an effort to become aware of any accident that occurs within the project area. Where possible, thorough records should be maintained about the accident, including site conditions and the status of signing and other traffic control measures. In case of an incident investigated by the WSP, do not move signs until released to do so by the trooper. When inspections are made of the work zone, either by project or region personnel, the documentation of these inspections should be maintained in the project files. The 1997 report on Highway Work Zone Reviews contains recommendations for review procedures and reporting format. The report emphasizes the following points:

- Each Region should designate an office or individual responsible for oversight of traffic control issues.
- Regions should conduct regular reviews of traffic control with management involvement and document results.
- Expand discussion of work zone traffic control within the Region.
- Regions will take the lead in scheduling statewide annual traffic control reviews.
- OSC Traffic will prepare an annual summary of the statewide traffic control reviews.

1-2.3F Resources for Traffic Control and Work Zone Safety

The following information may provide additional guidance and more specific detail. Also, this list includes the staff, reference documents and manuals mentioned throughout Section 1-2.3 of this manual.

- *Work Zone Traffic Control Guidelines*, M 54-44
- *Traffic Manual*, Chapter 5, M 51-02
- MUTCD Part VI
- Work Zone Safety Task Force Recommendations
- Quality Standards for Work Zone Traffic Control Devices (ATSSA)
- Work Zone Traffic Control Supervisor's Notebook
- Highway Work Zone Reviews, 1997 (Work Zone Safety Task Force)
- Planning and Scheduling Work Zone Traffic Control (FHWA-IP-81-6)
- Directive D 55-20, Reduced Speed in Maintenance and Construction Zones
- Instructional Letter IL 4008.00, "WSP Traffic Control Assistance in Work Zones"
- Traffic Control Supervisor Evaluation - Final Report
- Region Construction or Traffic Office and Public Information Officer
  (Traffic Engineer or Work Zone Traffic Control Specialist)
- OSC, FOSSC, Traffic Office
  (Traffic Specialist or Traffic Control Engineer)

1-2.4 Application of Contract Provisions, Plans, and Specifications

1-2.4A Construction Contracts Information System (CCIS)

The CCIS system is a mainframe application designed to track contract information and generate reports for all WSDOT administered construction projects. The initial setup of contract information into CCIS is done automatically by using information in the CAPS system. However, after the initial setup, the majority of the contract information is entered into the CCIS system by the project offices. The data entered is then maintained and stored on the mainframe.

CCIS generates the Weekly Statement of Working Days and tracks Change Orders. The system creates the forms for these reports so a preprinted form is not needed. Following is a list of data that needs to be entered into the CCIS database over the life of the project:

Contract Information

Region Administering contract
Region the contract is located in
Regional Administrator
Operations Engineer
Project Engineer
Begin and End mile post
County
Prime Contractor's local address, if applicable
Prime Contractor contract person
Prime Contractor D/M/WBE type if applicable
Prime Contractor ethnic code if applicabl
Date of Statement of Intent to Pay Wages—Prime
Date of Contractor and Subcontractor/Agent Cert. for F.A. Projects
Date of Affidavit of Wages Paid
Date of Preconstruction Conference Minutes
Date time started
Date work started
Date Orig. Progress Schedule approved
Date of Substantial Completion
Date of Physical Completion
Final Estimate to Contractor
Date of Completion
Final Estimate to Olympia Service Center (filled in by Region office)
Contract time

Request to Sublet

Training Program

Apprentice/Trainee Approval Request

Change Orders

Verbal Approval
Date sent to Contractor
Date received from Contractor
Is there Surety consent
Date of Surety consent
Dates of approval and execution

Weekly Statement of Working Days

Refer to the *CCIS Manual* for details on using the system.

1-2.4B Order Lists

Contract language requiring an order list can be found in Section 6-05.3(2), which addresses piling other than cast-in-place concrete and steel piles, and in Section 8-21.3(1), which addresses the determination of lengths of wood and steel sign posts. In other types of work, such as drainage, guardrail, etc., the actual layout will often result in quantities and lengths that vary from the plan estimates. A project engineer could choose to communicate this information in several ways, one of which could be the development of a formal order list. If an order list is used, extra care should be taken to ensure its accuracy. An alternate method of notice could also be a walk-through with the contractor representative after staking.

1-2.4C Changes in the Work

- INTRODUCTION

  WSDOT reserves the right, under *Standard Specification* 1-04.4, to make changes to the work, work methods, working days, or quantities, as necessary to satisfactorily complete the project as originally intended.

  Adding work beyond the original scope is, in essence, entering into a contract to perform work without the benefit of acompetitive bid. There is a statutory (RCW 47.28.050) exception from the competitive bid requirement for work up to a value of $7,500. If the value of the work is in excess of $7,500 it is necessary to go through the competitive bidding process.

1-2.4C(1) Types of Changes

There are several categories of changes that may occur during the course of the work. A change may warrant additional payment to the contractor or a credit for the contracting agency. A change may also warrant an increase or decrease in the working days. Every situation is different. The *Standard Specifications* are very specific on what additional costs are eligible for adjustment. The balance of this discussion of types of changes is intended to help describe and explain the various categories of changes.

(I) VARIATIONS FROM ORIGINAL BID QUANTITIES

*Standard Specification*1-04.6 describes criteria for considering changes in payment/working days based on how much the actual quantities required varied from the original bid quantities. Either party, the contractor or the contracting agency, is entitled to request repricing. This specification protects the state against windfalls (excess distributed fixed costs and/or overpriced items) and enables the contractor to provide a more conservative bid (limits losses on underbid and/or unrecovered distributed fixed costs). Negotiations for overruns may occur at any time during the contract and should be dealt with in a timely manner. If the Project Engineer decides that an adjustment will not be pursued by the State, then the justification of this decision should be added to the project records in some manner. In many cases,

under-runs will not be noted until the final quantities have been assembled. The executed Final Contract Voucher is often the final determination and record that all work performed under the contract is complete and all corresponding payments made are acceptable and appropriate. It should be noted that:

- *Standard Specification*1-04.6 is not intended to apply to added work or work that has changed in nature, scope or in any other manner from what is described in the original contract. However, if changes are made using existing contract items, the quantities variation spec may come into play anyway.
- Consideration under 1-04.6 is not a change in the contract since these actions are in accordance with the contract documents. A change order is only necessary if a new contract item is required for payment.
- There is no adjustment under 1-04.6 for quantities included only to provide a common proposal for the bidder.
- The contract may include quantities in the proposal (typically force account items) that are listed only for the convenience of the Contractor. There is no adjustment under 1-04.6 for these types of quantities. Items included as "pay plan quantity" will fall under this section if change orders revise the plan quantity beyond the limits.

[1] OVERRUN OF PLAN QUANTITY

{a} *eligibility* The renegotiation due to increased quantities applies only to the portion of the overrun in excess of 125 percent of the original plan quantity. Once again, this need only apply to work described in the contract as originally bid.

{b} *renegotiation:* The first 125 percent is always paid at the bid price. The price for the quantity in excess of 125 percent is eligible for renegotiation based on actual costs directly related to the item including a reasonable markup for unrecovered overhead and profit.

{c} *example* The contractor's unit bid price is assumed to consist of three basic items as follows:

LABOR, EQUIPMENT & MATERIALS, these are the so-called direct costs. These elements would be observed if someone was watching the work.

DISTRIBUTED FIXED COSTS, these are costs, incurred either on-site or off-site, representing obligations of the company that are not directly related to the direct costs noted above. This might include such items as home office overhead, field trailer for the project, contracts for the purchase of equipment, long-term leases, etc. It is assumed that these costs are distributed equitably among the items, assuming that the plan quantities will be achieved.

VARIABLE FIXED COSTS, These are on going costs incurred as a direct function of accomplishing of the item. This may include items such as office staff on site, phones, sani-can, etc., as long as the contractor can demonstrate that these added costs are a direct result of performing the overrun work. In other words, if it wasn't for the overrun work being considered, the costs would not have occurred. Another indicator is that these costs cease upon completion of the overrun work.

Theoretically, at 100 percent of the original quantity the contractor has recovered their distributed fixed costs and, by specification, is entitled to continue to collect more distributed fixed costs up to 125 percent. Payment for work beyond 125 percent should be based only on variable fixed costs, labor, equipment and materials. Those costs may go up or down from what was included in the bid amount depending on external forces and due to the efficiency gained or lost in performing the additional quantity.

[2] UNDERRUN OF PLAN QUANTITY

{a} *eligible costs* In the case of an underrun, the units of work that are performed will always be paid at the unit contract price. The adjustment will typically be a lump sum that represents one or two components. The first is the distributed fixed costs as previously described, associated with the units of work not performed up to 75 percent of the bid quantity. The second could be a negotiation of a price adjustment for work done if the average nature of the work done has changed materially from the average nature of the work bid. The maximum for all payments for work performed and adjustments is established by the contract as 75 percent of the original bid quantity at the bid price.

{b} *renegotiation* The renegotiations consist of first determining what distributed fixed costs were included in the original bid item and then, second, assessing the nature of the work actually done and comparing it to the nature of the total work that was bid. As previously stated, the contractor is entitled to recover those costs which were included in 75 percent of the original quantity either as part of the completed bid items paid or the negotiated lump sum.

There are three conditions as follows:

- Equipment rates shall be in accordance with the applicable AGC/WSDOT Equipment Rental Agreement.
- No payment will be made for unbalanced allocation of expenses among bid items. This is to protect both the contractor and the contracting agency against variations in quantity for items which have more or less than its share of fixed costs.
- No payment will be made for consequential damages or loss of anticipated profits. This requirement limits the contracting agency's responsibility to costs directly related to the item (also see EQUITABLE ADJUSTMENT).

{c} *example* For an under-run of 50 percent, the contractor would receive a lump sum payment for the unrecovered distributed fixed costs for unperformed units between 50 percent and 75 percent in addition to payment for 50 percent of the original quantity at unit prices. If the nature of the portion of planned work that was performed was different from the overall nature of the work bid, then an adjustment could also be made for that difference. The sum of all payments for the item will not exceed 75 percent of the original proposal units multiplied by the bid unit price.

(II) DELETION OF ITEMS

[1] AUTHORITY TO DELETE As provided in Sections 1-04.4 and 1-08.10(2) of the *Standard Specifications*, WSDOT may cancel all or portions of work included in a contract. When deleting work that is condition of award (COA), be sure to also delete that work from the COA requirements by completing the condition of award portion of the change order in CCIS. An adjustment in working days may also be appropriate.

[2] PAYMENT FOR REMAINING WORK There are some limitations to payment that should be noted under *Standard Specification* 1-09.5. When work is decreased or deleted by the contracting agency, payment will only be for the costs actually incurred for partially completed work. No profit will be allowed for work that was not completed. Consequential damages are also not allowed. Consequential damages may include such things as: loss of credit, loss of bonding capacity, loss of other jobs, loss of business reputation, loss of job opportunities, etc. In the case a portion of a lump sum item or partially completed unit items, the value of this work will need to be determined. It may also be necessary to negotiate a price adjustment for the work that was performed and paid using a contract unit price if there is a material difference in the nature of the accomplished work when compared to the nature of the overall planned work. Under certain circumstances when the contractor says "you eliminated all the easy work and left the difficult," there may be entitlement to an adjustment.

In the event that the deletion impacts the critical path for the project, an adjustment in working days may also be appropriate.

[3] PAYMENT FOR MATERIALS When work is deleted from the project and the contractor has already ordered acceptable materials for such work, Section 1-09.5 of the *Standard Specifications* controls.

{a} contractor restocks The first and best method for disposing of the materials is to request that the contractor attempt to return the materials to the supplier at cost or subject to a reasonable restocking charge. If the materials are restocked then, in accordance with Section 1-09 of the *Standard Specifications*, the contractor's actual costs incurred in handling the materials may be paid.

{b} contractor purchases If WSDOT cannot utilize the materials, the contractor may elect to retain them for other work. Once again, in accordance with Section 1-09 of the *Standard Specifications*, the contractor's actual costs incurred to handle the materials may be paid.

{c} state purchases and disposes As a last resort, if the materials can not be disposed of at a reasonable cost to WSDOT, the Department may choose to purchase the materials from the contractor. There are some limitations that come with the use of federal funds that may require that the materials be purchased with state funds depending on the situation. The FOSSC construction office may be contacted for advice. If possible, such materials may be provided to a future contractor (work with Design) or to Maintenance (work with the Regional Maintenance Office). If the materials cannot be used, they shall be disposed of as described in the manual for *Disposal of Personal Property* (M 72-91). Once again, in accordance with Section 1-09 of the *Standard Specifications*, the contractor's actual costs incurred in handling the materials may be paid.

(III) CONTRACT MODIFICATIONS

Changes in Materials, Work Method, or Work Sequence may or may not be a change to the contract. The determining factor is if the change is a modification of a specific contract requirement. If the contract includes language such as "recommends", "suggested", or "approved equal" associated with the item or allows the engineer to approve changes, then a change order is probably not required. In essence, this would not be a violation of the contract and therefore, does not require a change to the contract. A common situation is when the contractor proposes a change to a submitted manufacturer's recommendation, drawing or plan such as a falsework drawing or erection plan. Changes to those drawings/plans may be made by the same authority that approved them the first time. Once again, it is not a change to the contract.

(IV) COST REDUCTION INCENTIVE PROPOSAL (CRIP)

It is the policy of WSDOT to encourage our contractors to be innovative in planning and performing the work when a cost savings can be realized. When a contractor identifies such a savings and provides a significant portion of the efforts needed to develop the proposal, then WSDOT will share the resulting savings with the contractor. This policy is carried out through change orders containing Cost Reduction Incentive Payments. The Project Engineer should encourage CRIPs and seriously consider the mutual benefits of these proposals brought forth by the contractor as a partner in the contract.

[1] IS IT A CHANGE/CRIP? A proposal may include material and/or product substitutions, work method changes, work sequencing changes, etc., that normally take place during the construction of a project. Contractor proposals do not require change orders nor qualify as CRIPs when the change does not require modification of the contract. See the previous section "contract modifications".

[2] AGENCY CREDIT OR NO COST CHANGES (NOT A CRIP) The contracting agency is not obligated to accept a proposal which is not equivalent or superior to what is required by contract. However, if a contractor-proposed change is acceptable and desirable to WSDOT, but is not equivalent or superior to what is specified by contract, then a credit should be considered as part of the change order. This type of change would not be considered a CRIP. The credit required would normally be 100 percent of the cost or time savings. If it is determined that contract time is not affected and that the cost differential is negligible or to the state's advantage, then the change might require a "no-cost" change order. If, in the opinion of the evaluator, the State is not harmed and there is no windfall savings for the contractor, then a no-cost change would be appropriate.

[3] IDENTIFYING A TRUE CRIP

A CRIP might exist if:

- the change is the contractor's idea
- it offers, in effect, the same end result as what is specified in the contract
- savings will be achieved in dollars or time by its implementation

Qualifying actions by the contractor:

- accepts design risk of temporary features
- accepts risk of constructibility
- makes a significant effort to develop the proposal
- employs an engineer to assist in development (indicator, but not required)
- prepares all documentation, presentations, and plans
- invests an appreciable amount of time

[4] DEVELOPMENT OF CRIPS Once a CRIP is identified and developed to the point of conceptual approval, it is treated in nearly the same manner as any other change order. There are some differences, such as the contractor's responsibility for preparing the documents, and there is a special method of calculating the incentive payment amount. In the interest of uniformity, the following guidelines are to be used for the evaluation of CRIPs submitted by the contractor:

General Requirements and Principles Applying to CRIPs:

- The proposed change must alter a contract requirement.
- The proposed change must result in a product that meets the intent of the original design.
- In the judgment of the evaluator, the ultimate life-cycle costs to WSDOT shall not be unduly increased.
- The contractor agrees to substitute for deleted condition of award COA work.

Additional Requirements for Time-Reduction CRIPs:

- The time saving is a direct result of an actual change in the design or method of work (simply adding more crews would not qualify as a CRIP).
- The original time for completion was realistic (an early finish of a job with an unnecessarily long time for completion would not be a CRIP).
- The project does not already have an incentive/disincentive clause (in that case, the cost of accelerating the completion is assumed to be included in the bid and a CRIP sharing of the cost is inappropriate).

{a} *Step 1: concept approval* The first effort in development of a CRIP shall be to achieve concept approval. To this end, the contractor shall submit a written proposal to the Engineer for consideration. The proposal shall contain the following information:

- An explanation outlining the purpose of the change(s).
- A narrative description of the proposed change(s). If applicable, the discussion shall include a demonstration of functional equivalency or a description of how the proposal meets the original intent of the design.
- A cost discussion estimating any net savings. Savings estimates will generally follow the outline below under "Calculating the Incentive Payment".
- A statement providing WSDOT with the right to use all or any part of the proposal on future projects without further obligation or compensation.
- A statement acknowledging and agreeing that the Engineer's decision to accept or reject all or part of the proposal is final and not subject to arbitration under the arbitration clause or otherwise be subject to claims or disputes.
- A statement giving the dates the Engineer must make a decision to accept or reject the conceptual proposal, the date that approval to proceed must be received, and the date the work must begin in order to not delay the contract.

A separate copy may be sent to the OSC Construction Office to initiate tracking of the progress of the proposal. After review of the proposal, the Engineer will respond in writing with acceptance or rejection of the concept. This acceptance shall not be construed as authority to proceed with any changed contract work. Depending on the nature of the proposal, the review could include Region and Service Center designers and, possibly, outside consultants. The completeness and quality of the proposal will have an effect on the time needed for the review. WSDOT will make every effort to expedite the review.

{b} *Step 2: formal approval* Concept approval allows the contractor to proceed with the work needed to develop the final plans and other information to support the ultimate preparation of a change order. To qualify for an incentive payment, the contractor will normally take the lead in the development effort. The Project Engineer is encouraged to provide whatever assistance is needed. The development of a CRIP is an example of partnering at work in a contract. The contractor's submittal shall provide the Project Engineer with the following:

- Deleted Work — Calculated quantities of unit price work to be deleted. Proposed partial prices for portions of lump sum work to be deleted. Time and material estimates for deleted work in force account items.
- Added Work — Calculated quantities of unit price work to be added, either by original unit contract prices or by new, negotiated unit prices. Proposed prices for all new items to be negotiated.
- Contractor's Engineering — Costs of engineering to develop the proposal shall be submitted. Costs of employees utilized in contract operations on a regular basis will not be included.

- Schedule Analysis — If the CRIP is related to time savings, a partial progress schedule showing the changed work. A discussion comparing this schedule with the approved progress schedule for the project.
- Plans and Working Drawings — All drawings and supporting calculations necessary to accomplish the work. Those drawings which include engineering calculations and features shall be prepared by a professional engineer licensed in the State of Washington and shall bear the professional engineer's signature and seal.

{c} *Step 3; Preparing and approving the change order* The change order itself shall be prepared and processed in the same manner as any other change order.

Calculating the Incentive Payment In the interest of uniformity, all CRIP change orders shall include separate payment items as follows:

- Any deleted work, whether at contract prices or at agreed prices.
- Any added work, whether at contract prices or at agreed prices.
- The contractor's engineering costs, reimbursed at 100 percent of the contractor's cost.*
- The incentive payment to the contractor.*

  *Where added work exceeds deleted work, but time savings make a viable proposal, these two items would be replaced by:

  - WSDOT's share of added cost to achieve time savings.
  - The contractor's share of savings from deleted work.

The final sum of these shall ordinarily be the savings to WSDOT. However, in some cases, savings may be offset by any increased inspection and administration costs, or augmented by intangible benefits, such as user benefits, or by indirect benefits, such as overhead and engineering savings in time reductions, or by theoretical savings, such as a CRIP that eliminates a large anticipated overrun in plan quantity. In these cases, the benefits would not be expressly reflected in the change document, but should be discussed in the justification letter.

Proposal Savings: The incentive payment shall be one-half of the net savings of the proposal calculated as follows:

(gross cost of deleted work) - (gross cost of added work) = (gross savings)

(gross savings) - (contractor's engr. costs) - (WSDOT's engr. costs) = (net savings)

(net savings)/2 = (incentive pay)

WSDOT's engineering cost shall be actual consultant costs billed to WSDOT and extraordinary in-house personnel labor costs. Project personnel assigned to the field office or who work on the project on a regular basis shall not be included.

Cost to Achieve Time Savings:

(cost of added work) + (contractor's engineering costs) = (cost to achieve time savings)

(cost to achieve time savings)/2 = (WSDOT's Share of Added Cost)

If the timesaving proposal also involves deleting some work and, as a result, creates a savings for WSDOT, then the contractor would also receive one-half of the savings realized through the deletion.

{d} *Authority to Proceed with Changed Work* The need may arise to proceed with changed work before the change order is executed. WSDOT is willing to provide an approval, allowing the work to proceed, if the following criteria has been met:

- Concept approval has been granted.
- The necessary design reviews and approvals have been completed, including plans and specifications.
- The contractor has guaranteed, in writing, the minimum savings to WSDOT.

Such advance approval, if given, shall be in writing and shall constitute commitment by WSDOT to ultimate formal approval of the proposal. Where appropriate, the advance approval may contain a narrative formula of the elements to be utilized in the final cost negotiations. When work has begun under such an approval, detailed records shall be kept of the labor, equipment, and materials utilized and, if ultimate approval is not gained soon enough to provide prompt payment for the work, then an interim change shall be executed to allow partial payments.

{e} *Problems Arising After the Agreement* The contractor assumes the risk of constructibility. However, there will occasionally be problems that arise while the work of the CRIP is being performed. These will be evaluated on a case-by-case basis. The controlling philosophy will be that we entered the CRIP as a team with the contractor and we will approach problems in a similar vein. If the problem is something that could not reasonably have been anticipated in the design work of the CRIP, then the risk shall be shared as will the cost of the solution.

{f} *Proposed CRIP is not accepted* If the evaluator decides to reject a CRIP proposal, the contractor will be notified in writing with an explanation. Copies of this notice, with an attached analysis of evaluation costs and any other factors, shall be provided to the Region Construction Manager and the OSC Construction Office.

1-2.4C(2) Equitable Adjustment

(I) PRICING

Section 1-04.4 of the *Standard Specifications* specifies that an equitable adjustment (EA) in accordance with Section 1-09.4 will be made when changes cause an increase or decrease in the cost of performing work on the contract. The

basic theory of an EA is to leave the parties to the contract in the same position cost-wise and profit-wise as they would have been without the change, preserving to each as nearly as possible the advantages and disadvantages of their agreement. Although the contractor is entitled to profit on the changed work, the profit (or loss) on the unchanged work should remain unaffected by the equitable adjustment.

- This is an important point, *for unchanged work*, the contractor is entitled to the profit bid or a windfall, if the work turns out to be easier than expected.
- On the other hand, *for unchanged work*, the contracting agency is not obligated to make the contractor well for an under bid item.

Consequential damages are never allowed as part of a negotiated equitable adjustment. Consequential damages may include such things as: loss of credit, loss of bonding capacity, loss of other jobs, loss of business reputation, loss of job opportunities, impacts to another project, etc.

[1] UNIT PRICES An appropriate price may be established using average unit bid prices, citing similar unit bid prices, a determination of market value, by estimating the cost to perform the work, or a combination of these methods. Unit bid price is one indication of an equitable price, however the contracting agency should be prepared to support the price by other means.

[2] FORCE ACCOUNT When added work is paid by force account, a change order shall be prepared detailing the added work to be performed and the estimated cost. Standard Item Number 7715 is to be used for all force account items that do not have an assigned standard item number. Force account should be a last resort used only if the work can't be clearly defined.

[3] OVERHEAD There are two basic types of overhead as follows:

- DISTRIBUTED FIXED COSTS: Offsite "home office overhead" is the cost of running a company. These costs are assumed to be distributed among all the projects performed by the company. Onsite overhead is incurred as a function of time needed to accomplish the project. Onsite costs are assumed to be evenly distributed among contract items. This category of overhead is eligible under an equitable adjustment if working days are added to the contract as part of the adjustment.
- VARIABLE FIXED COSTS: these costs are directly associated with performing an item of work on the project and therefore vary with the quantity, the contractor is entitled to recover these costs as a part of an equitable adjustment

(II) FORWARD PRICING AND RISK

The first and best option for an equitable adjustment is agreement in advance between the contractor and WSDOT on the increased or decreased cost and time for performance of the changed work. The Project Engineer should expend every effort possible to obtain a satisfactory negotiated equitable adjustment prior to submitting the change order to the contractor for endorsement. The Project Engineer must remember that the contractor is a full participant in the contract and retains all the rights and privileges during a negotiation. When bidding a job, the contractor must be optimistic and take appropriate risks. When negotiating, it is understandable and acceptable for the contractor to be pessimistic and avoid risk, unless compensated. Some key points to remember are:

- A negotiated price will likely be higher than a competitive bid price.
- A proposal which assigns extensive risk to the contractor will likely be more costly yet.
- The contractor may be willing to take on this risk if the price is a bit higher
- The significant advantage of reaching a price agreement before the work is started (forward-pricing) is that the contractor assumes the risk of the accuracy of the pricing assumptions and predicted duration for performing the work.
- (when forward-pricing) the Project Engineer may utilize the high end of the estimating range in justification.
- (when forward-pricing) an audited overhead rate may be substituted for the markups described in Section 1-09.6. Contractors can usually provide an estimated home office overhead rate which may be checked by an annual audit, if warranted.

(III) PRICING AFTER FACT

When establishing prices after the work has been performed, actual costs should be used to the extent they are available. The following are key points to keep in mind:

- Costs for equipment cannot exceed the rates established by the AGC/WSDOT *Equipment Rental Agreement* for an equitable adjustment.
- When pricing after the fact, the markups described in Section 1-09.6 are appropriate for measuring time and materials because there is no risk involved in after-the-fact pricing.

(IV) UNILATERAL PRICING

In the interest of being timely, the change order should be a tool to document agreement and not a negotiation tool back and forth. Ideally we will have agreement with the contractor when pricing the work. On occasion, however, due to time constraints and difference of opinion, we can't always come to agreement. The difference of opinion may be for only a small portion of the work. *Standard Specification* 1-09.4 (2) provides, "If the parties can not agree, the price will be determined by the Engineer using unit prices, or other means to establish costs". This is not to say that the contractor is obligated to honor unit bid prices for work that qualifies for an equitable adjustment. This allows us to proceed with changed work prior to reaching an agreement on the price. In the interest of being timely, and provided the Project Engineer is comfortable that the included price can be supported, there's nothing wrong with issuing a

change order to the contractor unilaterally. This orders the work to proceed, establishes the State's position on cost, and puts the decision to continue negotiations in the contractor's hands as detailed under 1-04.5. The contractor is obligated to endorse, write a separate acceptance, or protest as described in the specification and a timeline is provided for these actions.

(V) TIME

The completed equitable adjustment should include provisions for any increases or decreases in contract time based on impacts to overall contract duration. The decision on time should be supported by an analysis of the project schedule. Analyzing time in advance encourages communication between the parties allowing the contracting agency to make an informed decision on the true costs. It also enables the contracting agency to mitigate time impacts if that is in the agency's best interest.

1-2.4C(3) Approval of Changes/Checklist

In addition to noting who can execute a change order, the checklist (see Figure 1-5) further indicates who must approve the change prior to execution. Written approval constitutes agreeing with the general nature of the change and can be granted by memorandum or e-mail. The checklist works as follows: for any item marked "yes", approval must be obtained as indicated by the columns with the "Xs". Each tier, left to right, has the authority to decide not to proceed with the change. This approval does not constitute authority to proceed with the work. That authority must come from the person who will execute the change order (*see verbal approval*.) In an emergency, the Region Construction Manager may authorize work to begin on any change order if the OSC Construction Office cannot be contacted for the required approvals within a reasonable amount of time.

(I) OLYMPIA SERVICE CENTER CONSTRUCTION OFFICE

[1] FHWA APPROVAL On a project with federal funding and for which the stewardship responsibility has not been delegated, written FHWA approval is required prior to beginning work on change orders that will:

- involve new construction on the Interstate
- alter the termini, character, or scope of work
- increase or decrease the project cost by more than $200,000 (except for changes prepared in accordance with *Standard Specification* Section 1-04.6)

{a} who does what? The OSC Construction Office will formally submit this type of change order to FHWA for approval.

[2] CONSTRUCTION ENGINEER, ADMINISTRATION

{a} areas of responsibility Contract Payments and Withholding of Payments; Contractor Assignment of Payments; Contractor Default; Time Extensions; Assessment of Liquidated Damages; Contract D/M/WBE, EEO, and Training Programs (i.e., Division 1 of the *Standard Specifications*).

[3] CONSTRUCTION ENGINEER, BRIDGE

{a} areas of responsibility Bridges & Structures; Bridge Deck Overlays; Walls: (1) Standard and Nonstandard Reinforced Concrete, (2) Soldier Pile, Tieback, Slurry, Cylinder Pile; (3) Soil Nail Walls (i.e., Division 6 of the *Standard Specifications*).

[4] CONSTRUCTION ENGINEER, ROADWAY

{a} areas of responsibility Construction Engineer, Roadway—Grading, Paving, Miscellaneous Paving; Culverts and Drainage; Concrete Slope Protection; Bridge Approach Slabs; Lighting; Signing; Traffic Signals; Fencing; Rest Areas; Walls: (1) Gravity Walls—Masonry, (2) Gabion, Rock, and etc., Proprietary Walls—Structural Earth and Geotextile (i.e., Divisions 2, 3, 4, 5, 7, and 8 of the *Standard Specifications*).

[5] FOSSC MATERIALS LAB

{a} areas of responsibility as you will notice from the checklist, the lab plays two roles:

CHECKLIST ITEM #10 the Materials Lab advises whether an alternate material is capable of performing the same function as a required material. However, FOSSC Construction makes the final approval based on application of the material, maintenance concerns, etc.

CHECKLIST ITEM #11 the materials lab is the approval authority for a structural design change with regard to roadway sections

[6] BRIDGE TECHNICAL ADVISOR (BTA)

{a} areas of responsibility The BTA is an on-call advisor to the Project Engineer on issues related to structural design. The BTA's role is to act as a resource for the Project Engineer in answering questions relating to design, plan clarifications and "minor structural changes".

{b} assignment of BTA After the contract has been awarded, the Region may send a written request to the Bridge Design Engineer in the Olympia Service Center Bridge and Structures Office for the assignment of a Bridge Technical Advisor (BTA).

{c} delegation of executing authority if BTA is assigned When a BTA has been assigned to the project, the Region may execute certain "minor structural" change orders provided: 1) The BTA's stamp and signature are on sheet one of the change order, or on a drawing that shows the change; or there is other written structural concurrence from the BTA; and 2) The magnitude of the change is within the Region's authority to execute. All other requirements of the change order checklist apply with the exception that for "minor structural" changes under item #15 the BTA's recommendation may substitute for the FOSSC Construction approval. A "minor structural" change is not easy to identify, therefore when in doubt, contact the OSC Construction Office for advice. Changes involving specifications, materials, work method changes, repairs and major design changes should be referred to the OSC Construction Office. The BTA would never become involved in contract administration issues such as payment, determining the existence of a change to the contract or directing the

contractor. These would be construction issues. Structural questions which require support analysis exceeding field capabilities or questions regarding geotechnical or hydraulics issues should be referred to the Olympia Service Center Construction Office. Any redesign of significance will be managed through the OSC Construction Office.

{d} *BTA duties* The Region and the Construction Office have agreed that "minor structural" questions may be referred to the BTA. Those "minor structural" questions which can be resolved on-site may be handled directly by the BTA. Documentation will be provided to the Project Engineer in support of the recommendations. The BTA also takes on the responsibility of keeping the Bridge and Structures Engineer advised of any changes, as appropriate.

{e} *BTA guidelines* Specific guidelines for the BTA's role on-site are as follows:

- Be alert to the need for technical advice to the Project Engineer and be available and responsive to the Project Engineer's requests.
- Develop solutions in accordance with the best structural interest of the project.
- Recommendations should generally be made in writing to the Project Engineer and should include an assessment of the approximate cost of the change.
- Provide the Project Engineer with written documentation to support the recommendations for changes. The Project Engineer will consult with OSC Construction, as appropriate.
- The BTA has the authority to approve and endorse the structural changes on behalf of the Bridge and Structures Engineer.
- Keep a written record of activities and recommendations pertaining to the assigned project (project diary).
- Refer/leave contract administration issues to the Project Engineer.
- Conform to the field safety requirements of the Region and the contractor.
- Give the construction project priority but be prudent in the use of time and expenses charged to the project.

The above guides are not meant to be all inclusive, but are generally representative of the scope of services to be provided by the BTA. The BTA's immediate administrative support on-site will be provided by the Project Engineer. The BTA's technical responsibility will be to the BTA's regular supervisor in Olympia. Overall determination and monitoring of the assignments will be made by the Bridge and Structures Engineer.

{f} *BTA summary* In conclusion, it is the role of Bridge Technical Advisors to advise the project engineer in their area of expertise, which is structural design. The project engineer has the responsibility and authority to administer the contract. Therefore, when it comes to contract issues of payment, work methods, material substitution, etc., it will be the Project Engineer's responsibility to get the proper approval of those aspects of structural changes.

1-2.4C(4) Delegation of Execution Authority

(I) *HIGHWAY CONSTRUCTION*

The Change Order Checklist (Figure 1-5), in addition to describing the approval requirements previously described, also outlines who has authority to execute a change order.

The OSC Construction Office executes the change order:

- if any one of 1, 2, or 3 is true (checklist item # 1, 2, or 3 is yes)

The Region (Regional Administrator or designee) may execute a change order provided:

- 1, 2 and 3 are not true of the change (checklist item # 1, 2, and 3 are no)

The Regional Administrator's authority to execute change orders may be:

- delegated to the Regional Construction Manager
- further delegated to the assistant to the Regional Construction Manager

The Region's (Regional Administrator or designee) authority to execute a change order may be delegated to the Project Engineer provided:

- items 1 through 6 are not true of the change (boxes 1 through 6 are marked no)

In the absence of the Project Engineer, the Project Engineer execution authority may be further subdelegated to the Assistant Project Engineer.

(II) *WASHINGTON STATE FERRIES*

The Director and CEO of Washington State Ferries (WSF) is authorized to approve all changes for terminal construction projects and may consult the OSC Construction Office for advice. This authority to execute change orders may be:

- Delegated to the Director of Terminal Engineering provided the change does not include a cost or credit exceeding $200,000 nor does it change the condition of award requirements.
- Authority may be further delegated to the Manager of Terminal Maintenance and Construction provided the change does not exceed $50,000 and does not include a time extension exceeding 10 days.
- In the absence of the Manager of Terminal Maintenance and Construction, that Manager's execution authority may be further subdelegated to the Assistant.

(III) *LOCAL AGENCY PROJECTS*

When the project being administered includes local agency participation, the project engineer should coordinate with the Regional Local Programs Engineer and the local agency to establish an approval process acceptable to all the parties. Any funding constraints and timelines for reviews and approvals should be established and specified in the contract if appropriate.

1-2.4C(5) Verbal Approval

The best business practice is to have a signed change order in place prior to proceeding with the work. Verbal approvals should be the exception. A verbal approval might be warranted if it will provide a cost/time benefit to WSDOT or minimize a cost/time disadvantage to the contractor. In the event that the Project Engineer determines that it is in the State's best interest to proceed with the work prior to having a signed change order, the permission "verbal approval" of the executing authority to proceed with the change under these circumstances must be documented in the file. The executing authority is the person who will ultimately execute the change order. The project engineer must have either a signed change order or a verbal approval in place prior to proceeding with the work

1-2.4C(6) Documentation

(I) FOSSC ROLE

The Construction Office will review Region-executed change orders and provide appropriate feedback. Four main areas the Construction Office will review are:

- whether the change is appropriate and there is entitlement
- determine compliance with the change order checklist
- check for existence of supporting documentation
- determine if eligibility for federal-aid participation has been addressed

(II) PROJECT FILES

[1] CCIS INPUT It is important that CCIS input be accurate and timely. CCIS is used by internal and external customers to monitor project changes and costs. Information on change orders (*including minor changes*) is readily accessible through a numbering process and is adequate so that everyone involved will understand the need for the change. Some key items to remember are as follows:

- Is there a clear description of the work?
- Is the origin and purpose of the change order must be entered using at least two of the reasons listed in the system?
- Was there an order, other than a signed change order, by the engineer for the contractor to proceed?
- Is there a reference any key documents in the change order file?
- Are any increases or decreases in contract time associated with the change order entered in the appropriate field enabling the *Weekly Statement of Working Days* to be automatically updated?
- For condition of award change orders, are the appropriate fields filled in to generate the change order and automatically update the condition of award items?
- Are any disclaimers included in the change order and are any agreed-upon disclaimers included in the text?

Finally, entries must be made in the appropriate CCIS fields concerning whether or not the change order was avoidable and the degree to which the change adds value to the transportation system. The following definitions shall be used for these purposes:

{a} avoidable A Change Order shall be considered as "Avoidable" if the cause is under WSDOT control* and if one or more of the following are true:

- The problem could have been discovered or anticipated with a review of known information or with a reasonable effort.
- It resulted from an engineering error or omission.
- The project could have been constructed according to the contract without the change.
- Reviews of Contractor submittals were delayed beyond specification requirements.

*(e.g.: Cause is not an Act of God, was not ordered by an outside agency, etc.)

{b} value added Whether or not the change order is considered "Avoidable", an element of a Change Order adds value as long as it is not compensating for rework or delay damages resulting from an error or omission and it meets one of the following:

- There is a positive benefit/cost ratio or an improved life cycle cost.
- Completion is accelerated to the benefit of the users.
- There is a benefit to the public or the environment.
- The change is needed to meet the defined or required design service level.
- Needs of outside stakeholders are met.
- Work zone safety is improved.

Value added through change orders will often appear as a "pay now or pay later" cost. It can be seen that, if the work had been included in the original plans, the bid would have been higher (pay now) by more or less the same amount as the negotiated change (pay later).

[2] TRANSMITTAL The memorandum transmitting the change order and attachments should include an explanation in sufficient detail so that everyone involved will understand the need for the change, will see that the price is appropriate and that appropriate checks and consultations have been made. The following is a list of items to consider for inclusion in the transmittal when putting together a change order:

{a} describe the change

- what is required by contract?
- what is the change?
- how does it solve the problem?
- reason for entitlement/why is this not paid under the contract?

- is there time associated with the change?
- did the contractor concur/if not why?
- is FHWA participation appropriate?
- does the change affect COA?

{b} evolution of the change

- how did the change evolve?
- discussions with associated offices (maintenance, utilities, environmental, budget, design, etc.)
- alternatives considered
- BTA involvement
- design approval necessary
- COA substitutions authorized by OSC Construction Office
- approvals in accordance with the checklist/date

{c} payment

- any increase or decrease in cost
- how it was established (see equitable adjustment)?
- force account must include estimate

{d} time

- does the change impact the critical path?
- how was any change in working days established?
- note if a change in contract time affects the amount of liquidated damages

{e} prior approval

- was the change order signed prior to proceeding with the work?
- if not/verbal approval - who and when

{f} attachments

- checklist
- documentation of verbal approval
- any supporting documentation needed for understanding

[3] DISTRIBUTION

{a} Region-executed When the Region (PE or Region Construction Office) has executed a change, then copies should be sent to the contractor, the OSC Construction Office and the OSC Accounting Office, (if necessary, OSC accounting creates and coordinates new groups in "CAPS" and "TRAINS") If the change order utilizes the "Minor Change" process, then copies of the single page document substitute for the transmittal and CCIS change order print out.

{b} Olympia Service Center-executed If the change is executed at the OSC Construction Office, copies will be sent to the contractor, the Region, the OSC Accounting Office, (if necessary, OSC accounting creates new groups and/or items) and, if appropriate, to the Bridge Office, Design and the Materials Lab.

{c} protecting the interest of the surety One area for the Project Engineer to watch is the interests of the bonding company. Consent of Surety should be required on any change order that expands the scope of the contract. It is also appropriate on any change of large value or risk. Failure to obtain consent of surety could weaken the State's protection under the bond.

1-2.4C(7) Minor Changes

(I) OVERVIEW

All contracts will have a standard item for "Minor Changes". This item will be established in every group as a calculated lump sum. Credits, debits, changes in working days and no cost changes may all be processed under the minor change method subject to the listed criteria.

(II) CRITERIA FOR USE

Keep in mind that although the change meets the criteria for using the minor change process, the Project Engineer may decide that this process is not appropriate. The use of this item is at the Region's and the Project Engineer's discretion. Also keep in mind that the limitations and approvals required by the change order checklist still apply as well as all other change order criteria not modified by this *Minor Changes* section. The Minor Changes process is limited to changes that satisfy all three of the following criteria:

- non-structural changes (checklist item #15 is no) and,
- the value of the change (credit or debit) is estimated at $5,000 or less and,
- any change in working days not greater than ten days.

(III) ENDORSEMENT

In the interest of being timely, the change order should be a tool to document agreement and not a negotiation tool back and forth. The contractor's authorized signature on the change order is desirable but not mandatory. A phone call or a verbal agreement with the project superintendent may be appropriate if payment is to be made by "Minor Changes". This may be a good discussion item at preconstruction meetings. The Project Engineer should determine when the Contractor's signature is required based on when it is in the State's best interest to document agreement prior to proceeding with a change order. Some situations that may warrant the Contractor's signature are as follows:

- The contract includes substantial incentives.
- There are mutual benefits associated with the change.
- The change might include impacts to time or other work.
- The change is proposed by the contractor.
- The change is a claim settlement.

CHANGE ORDER — CHECKLIST

	Included?		If Yes, Approval Required		
	YES	**NO**	**PE**	**Region**	**Const. FOSSC**
I. Executed by the Field Operations Support Service Center (FOSSC) Construction Office					
1. A cost or credit equal to or exceeding $200,000.	❑	❑	X	X	X
2. A change in the contract documents beyond the scope, intent, or termini of the original contract.	❑	❑	X	X	X
3. Contractor proposed revisions to condition of award requirements.	❑	❑	X	X	X
II. Executed by the Region					
4. A cost or credit greater than $50,000 but less than $200,000.	❑	❑	X	X	
5. A change in contract time greater than 10 and less than or equal to 30 working days must be related to changes implemented by change order.	❑	❑	X	X	
6. A change in contract time greater than 30 working days or a change in contract time unrelated to any change order.	❑	❑	X	X	X
7. A determination of impacts and/or overhead.	❑	❑	X	X	X
8. Specification change, involving FOSSC generated specifications.	❑	❑	X	X	X
9. Specification change, involving Region generated specifications.	❑	❑	X	X	
10. Material or product substitution. (Requires FOSSC Materials Lab Recommendation)	❑	❑	X	X	X
11. A structural design change in the roadway section. (Requires FOSSC Materials Lab approval)	❑	❑	X	X	
12. A determination of changed condition.	❑	❑	X	X	X
13. Settlement of a claim submitted under Section 1-09.11(2).	❑	❑	X	X	X
14. Repair of damage qualifying under Section 1-07.13 of the *Standard Specifications* regarding "acts of God" or "acts of the public enemy or of government authorities".	❑	❑	X	X	X
15. A structural change for structures (see BTA authority as shown in the *Construction Manual*.	❑	❑	X	X	X

Fill in applicable Verbal Approval dates, if any:

PE Date _____ Region Date _____ FOSSC Date _____

Verbal Approval:
This is approval given by the executing authority (FOSSC, the Region, or the Project Engineer) to proceed with work prior to issuance of the written change order. This approval is warranted on any change where a cost/time benefit to WSDOT can be realized or a cost/time disadvantage to the contractor can be minimized by prompt action.

Figure 1-5

In any case, a copy of the Minor Change must be sent to the contractor. If the contractor does not agree with the terms or conditions of a change order, the contractor is required to follow the procedure outlined in Section 1-04.5 of the *Standard Specifications*. This orders the work to proceed and puts the decision to continue negotiations in the contractor's hands as detailed in that section. The contractor is obligated to endorse, write a separate acceptance or protest as described in the specification, and a timeline is provided for these actions.

(IV) EXECUTION

Due to the criteria for the application of minor changes, the Project Engineer has the authority to execute these change orders.

(V) PAYMENT BY LUMP SUM

The negotiation of prices for payment under "Minor Changes" is intended to be the same as any other change order. The focus, as always, should be forward-pricing such that the contractor controls the work and assumes the risk. However, situations occur where it makes sense to measure portions of the work in a variety of ways such as units, force account and/or lump sum. The method for establishing, measuring and monitoring the total may be by any combination of methods however, the payment will only be by a lump sum under the item "Minor Changes".

(VI) PROJECT FILES

[1] CCIS INPUT "Minor Change" change orders must be entered into CCIS, however the required input is slightly abbreviated. Since a formal change order document as described in Chapter 1-2.4C(6) is not processed, the *Work Description* section in CCIS requiring a detailed upload of text is not required. However, the *Short Description* is required and should provide enough detail to identify the content of the "Minor Change" change order. All other information requested by CCIS, including changes to working days or COA, is required.

[2] TRANSMITTAL Under the Minor Change process, the "*Change Order - Minor Changes* form # 421-005 EF" substitutes for the transmittal included in the more formal process described above. The information on the Minor Changes form should at a minimum briefly document two key items:

- Reason for entitlement/why is this not paid by bid items.
- Any increase or decrease in cost and time and briefly how it was established.

[3] DISTRIBUTION When utilizing the "Minor Change" process, the minor change form is substituted for the change order document and the transmittal. In the case of the "Minor Change" process, it is not necessary to route the backup documentation nor a CCIS print out, as part of the distribution. A copy of the form may be used to document the payment.

1-2.4D Force Account

A. General

When it is difficult to provide adequate measurement or to estimate the cost for certain items of work, force account may be used in order to pay the Contractor for performing the work. Some contract items may be set up to be paid by force account. Some change orders may require payment by force account. Section 1-09.6 of the *Standard Specifications* describes the boundaries for payment of work performed by the force account method. In any case, the purpose of force account is to fully reimburse the Contractor for costs incurred on the work. These costs may also include indirect segments, such as travel, per diem, safety training, industrial safety measures, overhead, profit and other hidden costs. The objective is to minimize the inclusion of any "contingencies" included in the contract bid in anticipation of costs that may be incurred during force account work and not reimbursed.

When work is added to the contract and is to be paid by force account, a change order will have been prepared describing the added work to be performed. The change order package will also contain an independent estimate of the cost to perform the added work. All non-standard force account items are assigned the Standard Item Number 7715.

Force account payments are typically not authorized for employees engaged in management or general supervisory work. The cost for this type of activity is presumed to be included in the Contractor's markups for overhead and profit. However a foreman or, in some cases, a dedicated superintendent devoting full time to the force account work is eligible for payment on the force account.

On projects that require the Contractor to employ trainees, these employees may be utilized in force account work.

The Project Engineer should consider a decision to direct force account work with the same degree of caution that would be applied to directing any other work on the contract. The Contractor should have the expertise to schedule the work and determine what equipment is required. In most cases, it is best that we allow the Contractor to propose the method and approach to the work. Our most effective role would be to concur or approve of the Contractor's proposal or suggest modifications to it. Before any work is performed by the Contractor on a force account basis, the inspectors should review and agree with the Contractor upon:

1. **Labor.** The classification and approximate number of workers to be used, the wage rate to be paid those workers, whether or not travel allowance and subsistence is applicable to those workers, and what foreman, if any, will be paid for by force account. This agreement will be closely tied to the development of the Labor List.

2. **Materials.** The material to be used, including the cost and any freight charges whether the material is purchased specifically for the project or comes from the Contractor's own supply. For materials representing a significant cost, or where the industry experiences fluctuations in price, the contract allows for shopping and the Contractor may

be directed to obtain quotations. If time permits and the situation seems appropriate, the Project Engineer may want to do this.

3. **Equipment.** The equipment to be used including the size, rating, capacity, or any other information to indicate the equipment is proper for the work to be performed whether the equipment to be used is owned by the Contractor or is to be rented. The cost per hour for the equipment to be used. In the case of rented equipment, the Engineer may ask for competitive quotations, provided the request is made in advance and there is time to obtain them.

Payment for force account work should be made on the same timely basis as any other item of work. When money is being withheld from a progress estimate, the criteria for withholding should apply equally to all items of work, not just to force account work, because of its method of payment.

The procedure for record keeping and payment of force account work on change orders shall be the same as for contract items to be paid by force account. Separate records are to be kept for each force account whether it is an item in the original contract or established as a result of a change order.

B. Payment Procedures for Force Account Work

1. **Labor.** The specifications require the Contractor to prepare and submit a "Labor List" in advance of force account work. Once approved by the Project Engineer, this list provides the hourly rate for force account calculations until a new list is approved. New lists will not be approved retroactively and calculations previously made from an approved list will not be changed when a new list is approved. If the Contractor fails to submit a list before the first force account calculations are made, then the Project Engineer will determine the rates from the best data available (payrolls on this job, payrolls on other jobs, prevailing wage requirements, union information, etc). Labor list rates will include all the pieces of wage expense — base rates, benefits, assessments, travel, safety testing — with allocations shown where necessary. Examples of Labor List entries might be:

Generic Laborer (Straight Time)		John Doe, Teamster (Overtime)	
Basic Wage/hr	$21.36	Basic OT Wage/hr	$32.81
FICA (7.65%)		FICA (7.65%)	
FUTA (0.80%)		FUTA (0.80%)	
SUTA (5.42%) Total =	2.96	SUTA (5.42%) Total =	4.55
Indust Ins $1.01/hr	1.01	Indust Ins $1.01/hr	1.01
Benefits/Hr	5.45	Benefits/Hr	8.00
	$30.78/hr		$46.37/hr
Travel Expense		Travel Expense	
$250/40 hrs	6.25/hr	$250/40 hrs	6.25/hr
Health Expense		Health Expense	
$80/320 hrs	0.25/hr	$80/320 hrs	0.25/hr
Total	$37.28/hr	Total	$52.87/hr
Use	$37/hr	Use	$53/hr

These examples show the rate rounded to the nearest dollar, which is permissible. If either party would prefer to use the unrounded amount, that is also acceptable. When deciding how many hours require compensation, the specification allows all hours that are a contractual obligation or are customary payments made to all employees. This means that, if a labor contract calls for 4 hours of pay for any call-out, then that is a contractual obligation and the 4-hours would be eligible for reimbursement. (As always, the Contractor is expected to reassign the employees, if possible, to avoid the penalty.). In the same vein, a non-Union contractor, who has made call-out payments to all employees for years, would be eligible for reimbursement for similar payments in a force account.

2. **Materials.** Materials also works from a list, but the list is generated in a different fashion. The Project Engineer provides the basic list of materials observed by the inspector. This is done in a timely manner (daily, unless the Contractor agrees otherwise). The Contractor adds prices to the list and attaches invoices or affidavits to support the prices. Once the list is returned and checked, payment can be made.

If a shipment of material is only partially consumed during the force account reporting period, the inspector may choose to include the entire amount in the first report or to estimate the amount consumed during each reporting period. The decision should be based upon the amount of the shipment, the nature and cost of the shipment and the security of the stockpile. A case of empty sandbags to be utilized throughout the winter for pollution control would adapt well to a single report, while a stockpile of galvanized conduit should probably be reported piecemeal as it is used in the work. The Contractor may use copies of the original invoice when the material is reported incrementally. If the Contractor has to restock unused material, restock charges can be reimbursed if the original order was reasonable for the work planned.

Along with supplying prices and invoices, the Contractor may suggest additions or corrections to the Materials List. These suggestions will be reviewed by the Project Engineer and, if appropriate, added before payment is made.

If the Contractor does not have an invoice, as in the case of stockpiles or some warehouse stock, then an affidavit will suffice. The Engineer may review the affidavit and, if it is an unreasonable price that cannot be supported, the Engineer may substitute another price, utilizing the best data available. The reasonableness of the price must consider the circumstances of the purchase and all costs associated with obtaining material from another source.

The specifications allow the Engineer to require competitive quotations, if this is done before the work is started and sufficient time is available. If the Contractor has to divert an employee to obtain the quotations, then that employee may be included in the labor reimbursement for the force account.

3. **Equipment.** The Project Engineer should review and comply with the rules governing payment for equipment as outlined in the most current AGC/WSDOT Equipment Rental Agreement. This agreement was developed as an interpretation of the specifications and is relatively self-explanatory.

There are three methods of acquiring equipment for use on a force account. "Owned" means that the Contractor controls and operates the equipment. A long-term lease arrangement would be the same as ownership. Owned equipment is priced according to the Blue Book. "Rented to Operate" means that the Contractor has obtained a piece of equipment through a short-term rental and will operate that equipment with its own employees. Rented to Operate equipment is priced according to the invoice from the rental agency. "Rented-Operated" means that the Contractor has obtained a service from an individual or a company to provide a piece of equipment with an operator. An operated rental is not paid as equipment, but rather as a Service. In some cases, the Service will be reclassified as an entity performing in the manner of a subcontractor (see below).

Repair of damage is considered a risk of providing equipment. The cost of this risk is assumed to be in the markup for overhead and profit. Neither costs for repair of damage nor insurance against such damage should be included in the force account direct charges. A common event is the offer of a Damage Claim Waiver by a renting agency. If such a charge appears on an invoice, it should be removed before payment is calculated.

As with Materials, the Engineer may require competitive bids for equipment rentals.

4. **Services.** Services billed by invoice will be compensated according to the invoice if that is the typical method in standard industry practice. Billing by invoice does not excuse the service provider from the requirements of the prevailing wage laws, from contract requirements for requests to sublet, or from other requirements. However, the force account payment system will not be used to enforce contract wage or other requirements. Typical industry practice might include specialized technical services, such as Testing Labs and Environmental Cleanup firms. Also included might be unit price invoices, such as Sweeping per mile or Concrete Pumping per cubic meter, or lump sum quotation invoices, such as Remove Danger Tree or Pump Septic Tanks.

The markup for services depends on the nature of the firm's activities on the project. If the firm is clearly an uninvolved supplier, then the Service markup will apply. If the firm is acting as a subcontractor, then the markup will be made under the subcontractor provisions described below, with the underlying (subcontractor's) overhead and profit assumed to be embedded in the invoice.

It should be noted that payment of force account work through an invoice does not excuse the Contractor from other requirements of the contract. Wage rate rules, subcontractor approvals and other provisions, while not necessarily required for force account payments, are still contract requirements and must be enforced. Note that the statutes associated with some enforcement do involve the withholding of payment for associated work.

5. **Mobilization.** Mobilization and demobilization are reimbursable expenses for assembling equipment, materials, supplies and tools for any force account item and then returning those items to the previous location when the work is finished. Demobilization can include restocking costs for materials not utilized. Force account mobilization applies to original bid item force accounts as well as force accounts added through change orders. The standard bid item "Mobilization" is assumed to not include mobilization activities for force account work.

Mobilization may occur within the project limits if special efforts are required to assemble needed items to the force account location. For example, if a lowboy is required to move a bulldozer from one end of a project to the other, then that mobilization effort would be reimbursed.

If off-site preparation work is needed, the Contractor must notify the Engineer in a timely enough manner that the work can be observed, if that is desired. Without such notice, that preparation work will not be reimbursed.

The AGC Agreement allows for pro-rating mobilization costs for equipment that will be used in both force account and bid item work. This will be done by negotiation and agreement. For example, if the Project Engineer and Superintendent agree that a mobilized backhoe will be used three hours on regular work for each hour on force account, then 25 percent of the mobilization costs would be paid on the force account.

All mobilization activities can be categorized as Labor, Equipment, Materials, or Services and will be listed under those categories for payment.

6. **Other Payments**

Permits or Fees

When a force account requires the Contractor to pay for permits or fees (hazardous waste dumping, etc.) that would fall outside the scope of overhead, these costs are reimbursable and may be included in the "Services" section of the force account payment.

Sales Tax

How retail sales tax is handled on the overall project depends on the ownership of the property upon which it rests. Keep in mind that a project may span more than one type of ownership.

STATE AND PRIVATELY OWNED LANDS

Work performed on state or privately owned land falls under Section 1-07.2(2) of the *Standard Specifications* and Department of Revenue Rule 170. Retail sales tax **is required** on the total contract amount. The Contracting Agency provides this payment to the Contractor to be passed through to the Department of Revenue. This is the tax noted in the summation of contract payments.

The Department of Revenue considers materials incorporated into the final work (such as concrete, signs, aggregates) to be an integral part of the completed improvement. These materials are purchased for "resale". **No tax is required** when purchasing these materials, therefore, no tax is paid as part of force account payments nor as part of pricing change order work. The contractor purchases these materials as tax exempt and, in turn, sells them to the State as a part of the total project and the only tax collected is on the total contract as described previously.

There may be items that the contractor **is required** to pay sales tax on at the point of purchase. The Department of Revenue considers supplies consumed (such as concrete forms, fuel or tools, equipment purchased or rented) during the performance of the contract to be "consumables", a part of the overall cost of doing business. The contractor is required to pay retail sales tax at the point of purchase/ rental for these items. These costs are bid as a part of the associated bid items.

When calculating or estimating the cost of force account or change order work, sales tax should be included in the individual invoices for "consumable" items. It's a fine line; for example, permanent striping is considered "resale" (tax exempt), temporary striping is a "consumable" (taxed). The fact that taxes are shown or not shown on invoices is not a reliable indication of what the contractor is obligated to pay. The contractor may receive reimbursement later or be required to pay additional taxes when the contract is complete. The contractor's books are audited by the Department of Revenue upon completion of each project to ensure compliance. The Project Engineer must apply these guidelines as closely as possible. Note that, in some cases, it is possible and necessary to pay a tax on a tax.

CITY, COUNTY, AND FEDERALLY OWNED LAND

Work performed on city, county or federally owned lands falls under Section 1-7.2(1) of the *Standard Specifications* and Department of Revenue rule 171. Retail sales tax **is not required** on the total contract amount.

The Contractor **is required** to pay retail sales tax on all purchases regardless of use ("consumable" or not). For contract work, this expense is incidental and therefore included in the individual contract items as a part of the bid amount.

When calculating or estimating the cost of force account or change order work, sales tax should be included on all invoices. As stated previously, the fact that taxes are shown or not shown on invoices is not a reliable indication of what the contractor is obligated to pay. The contractor may receive reimbursement later or be required to pay additional taxes when the contract is complete. The contractor's books are audited by the Department of Revenue upon completion of each project to ensure compliance.

Exceptions

Construction of the following facilities has been specifically exempted from Department of Revenue rule 171. Work on these facilities falls under Department of Revenue rule 170 even if they are on non state-owned land:

- Water mains
- Sanitary sewers, if they are not a part of the road drainage system
- Telephone and telegraph lines
- Electrical power, if such power does not become a part of a street or road lighting system
- Other conduits or lines

Conclusion

Most of the time, retail sales tax on invoices is required. In turn, we need to reimburse the contractor for the tax (paid or deferred) on force account invoices and include the costs when estimating the value of change order work.

The one exception is "resale" items if the contract falls under Department of Revenue rule 170. "Resale" items under this rule do not require that retail sales tax be paid at the point of purchase.

These rules should be adhered to regardless of whether retail sales tax is shown on the invoice.

Subcontractor Markup

If work is being performed by a subcontractor (or by a service supplier acting in the manner of a subcontractor), then a supplemental markup will be added. This supplement will be added one time for each payment, even if a lower-tier subcontractor is doing the work. The markup is a graduated step-down rate, which gets smaller for each force account item as the amount of work increases.

The amounts on which the rate is determined will be tracked separately for each subcontractor on each force account item included in the original contract or added by change order. If two subcontractors work on the same force account, then the accumulated total will be tracked for each, and markup for work done by each will be according to the respective total. If a single subcontractor works on two force accounts, then there will be a running total of work done by that subcontractor on each account and the markup rate for the same sub on different force accounts could be different.

C. Records and Source Documents

Accurate daily time records should always be kept when performing force account work. Form 422-008, "Daily Report of Force Account Worked", is provided for the Project Engineer's use to help facilitate timely, accurate, and complete records of the daily force account activities. Whatever method of record-keeping is used, it is recommended that the document be signed by both the Inspector and a representative of the Contractor agreeing on the materials used and the hours noted for labor and equipment. A copy of the daily report must be provided to the Contractor. When the work is performed by a subcontractor, a copy should also be provided to the subcontractor.

The costs for force account work should be determined and entered into the CAPS system in as timely a manner as possible.

All calculations for determining force account costs should be checked, initialed, and dated. After the cost of the work has been computed in the office, a copy of calculations shall be furnished to the Contractor.

D. Summary

To summarize, the purpose of force account is to fully reimburse the Contractor for costs incurred on the work. The objective of force account administration is to mini-

mize the inclusion of any "contingencies" included in the contract bid in anticipation of costs that may be incurred during force account work and not reimbursed.

Items which are bid or negotiated with a unit price or a lump sum agreement will not be converted to force account unless a change (as defined in Section 1-04.4 of the *Standard Specifications*) has occurred. On the other hand, any work to be done or the remaining portion of work underway on a force account basis may be converted to unit prices or a lump sum at any time the parties can reach an agreement. Such a conversion is highly desirable and should always be a goal of the Project Engineer.

1-2.4E Differing Site Conditions (Changed Conditions)

There are two types of changed conditions. The first (Type I) is a hidden condition that is different from that indicated by the contract (the borings do not show this rock). The second (Type II) is a hidden condition that is not shown differently in the contract, but is unusual and different from what a reasonably prudent contractor would expect (I've never seen this before and nobody else has ever seen it, either). In either case, to qualify for renegotiation, the condition must have a "material" affect on the cost of doing work. In other words, there must be a definable difference in the way the work will now be done and that difference must be significant.

The contractual rules included in Section 1-04.7 are related to fair notice and to giving the State an opportunity to examine the condition and, perhaps, order a different approach to the work. If the contractor takes away this opportunity, then there may be grounds for denying compensation for the different approach to the work. In some cases, the changed situation is not recognized until much or all of the work has been done. In that case, the determining factor for notice is the time when the Contractor knew or should have known of the condition. Whenever notice is served, it must be written.

In a perfect world, a changed condition will be recognized, notice will be given and work will be stopped until all the interested parties can reach agreement on how to proceed. In the real world, we are often faced with traffic closures and safety issues. Contractors work on tight schedules with one activity interdependent on others and it is not in the public interest to stop work while a changed condition discussion takes place. As soon as possible, to the extent possible, and in any manner which accomplishes the intent, the Project Engineer is expected to consult with the Region construction manager and with the Olympia Service Center and to obtain the approval of the OSC Construction Office before agreeing that a changed condition exists or before entering negotiations for price adjustments.

The Department response to a contractor's assertion of changed conditions, whether agreement or denial, must be written. The Project Engineer must keep accurate time and material records whether the response was negative or positive.

1-2.4F Termination of Contract

Contract termination is divided into two major categories, termination for default and termination for public convenience. Section 1-08.10(1) of the *Standard Specifications* defines the situations when a contract may be terminated for default (doesn't happen very often.) Section 1-08.10(2) of the *Standard Specifications* defines the situations when a contract may be terminated for public convenience.

Keep in mind that the conditions of the termination may be negotiated in the event that the termination is in the best interest of both parties. An example would be if a major change is beyond the abilities of the contractor. Negotiations with regard to conditions of the termination may include pricing partially completed items, mobilization payment, or the State taking possession of fabricated/purchased materials.

In both categories, if federal funds are involved, FHWA needs to be notified and informed of the situation early in the process. Specifically, Federal participation eligibility should be discussed prior to making a decision on termination. Formal notification and discussion should use normal channels through the Region to the OSC Construction Office. Authority to terminate a contract rests with the same position that had authority to execute the contract.

1-2.4G Subletting Portions of the Contract

Requests by the Contractor for subletting are submitted on Form 421-012 (Request to Sublet) and are to be approved by the Regional construction manager or designee. The request must be approved prior to the performance of any work on the project by either the subcontractor or a lower-tier sub. A copy of the Statement of Intent to Pay Prevailing Wages, executed by the subcontractor or lower-tier sub and approved by Washington State L&I, must be provided to the Project Engineer by the Contractor prior to payment for any work performed by that subcontractor or lower tier sub. In addition, for Federal-aid projects, Form 420-004 (Contractor and Subcontractor or Lower-Tier Subcontractor Certification for Federal-aid Projects), must be submitted with the Request to Sublet.

If a subcontractor wishes to further sublet a portion of its work to a lower-tier firm, the Contractor must submit the name of the lower tier firm along with the request to sublet the work to the subcontractor. If more than one subcontractor on a project wants to utilize the same firm as a lower tier subcontractor, separate requests are required. Section 1-08.1 of the *Standard Specifications* sets limitations on the amount of work a lower tier sub may perform for each subcontractor. Section 1-08.1 of the *Standard Specifications* also sets forth the procedure for subletting portions of the project, and the percentage of the contract which may be sublet. The dollar value to be used for determining the amount of work that must be performed by the Prime Contractor is the total original contract amount less the amount of any specialty items which have been subcontracted. The Project Office will enter data from the request to sublet into the CCIS database.

When Condition of Award items are sublet, ensure that the total amount is equal to or greater than the amount in the Condition of Award letter and that the Condition of Award items will be sublet to the proper Condition of Award subcontractor. If a bid item shown on the Condition of Award letter is not sublet to the proper D/M/WBE, then the request cannot be approved until the contract is changed.

1-2.4H Contractors' Shop Plans and Working Drawings

In general, all shop drawings and supplemental details submitted by the Contractor should be checked, in detail, for conformance to all contract requirements before forwarding on for approval or further actions by others. A Change Order is required for any deviation from the contract plans. Any conflicts with the contract plans that have been detected or revisions that may be desired by the Project Engineer should be noted on one copy of the drawings being forwarded to the Olympia Service Center for approval. If Change Orders to cover any deviations from the contract plans have been issued, or are being processed, those changes should also be noted.

Figure 1-6 is a list of many of the most common shop plans and drawings, and includes references to the specifications that require them and the section of this manual that covers the procedures for processing them. Use Form 410-025 to transmit all listed bridge and structure plans to the Bridge and Structures Engineer.

The Project Engineer should maintain a log of all shop plans or other drawings received for each contract.

Shop plans for items that conform to the contract plans or a standard plan, except those listed in Figure 1-6, should be checked and approved by the Project Engineer.

1-2.4I Relief of Responsibility for Maintenance and Third Party Damage

Section 1-07.13(2) of the *Standard Specifications* holds the Contractor responsible for all work and materials under the contract until the project is completed. This Section further provides relief to the Contractor from maintaining and protecting specific portions of the contract as they are completed. Upon receipt of a written request from the Contractor for this relief, an analysis shall be made to ensure the requirements of Section 1-07.13(2) of the *Standard Specifications* are met. The Regional Construction Manager or designee may approve these requests. Relief may be granted for several specific items, for example, "Item 17, Beam Guardrail, Type l; Item 18, Beam Guardrail Anchor Type l; etc." Relief may also be granted for all work except certain items, for example, "All work except Item 38, Electrical". The approval of the Contractor's request must be in writing.

Section 1-07.13(3) of the *Standard Specifications* provides relief of responsibility for damage by public traffic when it is necessary for public traffic to utilize a highway facility during construction. When the conditions specified in this section are met, the Contractor is automatically relieved of responsibility for damage caused by public traffic. This relief does not extend to damage by vandalism or other cause. The Contractor resumes responsibility if traffic is relocated to another section of roadway.

The first paragraph of Section 1-07.13(3) refers to damage to "permanent work". This refers to work included in the contract that is completed according to the plans and is damaged. The intent is to exclude equipment, temporary facilities and temporary materials such as formwork and falsework. Contract features such as "Temporary Traffic Barrier", are included if they have been constructed according to plan and are damaged by public traffic using an approved traffic plan.

1-2.4J Protested Work

Occasions may arise where the contract may not have fully or clearly defined a work activity or financial responsibility. In these cases, the Project Engineer may determine that, in order to avoid delay of other critical work, protect the traveling public, or other critical circumstances, it may be necessary to direct the Contractor to proceed immediately to complete the work. In some instances, this order may be against the Contractor's wishes. While acknowledging the Contractor's verbal protest, the Project Engineer should again direct the contractor to proceed with the work in accordance with Section 1-04.5 of the *Standard Specifications*. The Contractor should also be advised that, as a separate action, they should follow the guidance in this same section for protest and protest resolution. While these provisions require the Contractor to keep accurate records for completing the protested work, it is not advisable for the Project Engineer to rely on these records to determine what may have taken place when trying to verify costs for protested work many months later. In order to help document the Contractor's work, the form "Report of Protested Work" (DOT Form 422-007) was developed as a tool for the Project Engineer's use.

1-2.5 Contract Time

1-2.5A General

The length of time allotted to the Contractor for completing the work on the contract is stated in the contract provisions. This time allotment is usually referred to in terms of working days. As a result, the guidance in this chapter pertain to contracts in which time is allotted to the Contractor on a working day basis. The provisions for progress schedules are noted in Section 1-08.3 of the *Standard Specifications*. The contract provisions may also contain requirements that add to, or supersede, all or part of Section 1-08.3.

Progress schedules should depict, in graphic form, the operations and relationships in order of performance, with sufficient detail that the progress of the work can be evaluated accurately at any time during the performance of the contract. After review and approval of the progress schedule by the Project Engineer, an approved copy should be returned to the Contractor. At a regular interval, the Project Engineer should review the approved progress schedule, comparing it to the current progress of work. When the Project Engineer determines the original or any supple-

mental progress schedule does not provide the information needed, a supplemental schedule may be requested from the Contractor. The contract provisions may also require supplemental or periodical progress schedules from the Contractor.

The Contractor may begin work as soon as the contract is executed and shall prosecute the work diligently until physical completion has been reached.

The Region will be notified by telephone on the day the contract is executed by WSDOT. Because it can take several days for the executed contract to reach the Contractor, the Region should immediately provide the Contractor with verbal notification of the date of execution so that the Contractor may order materials and make preparation to mobilize onto the project and begin work. The date the contractor actually begins work on the project is to be noted and entered into CCIS.

Between the execution of the contract and the acceptance by the State Construction Engineer, the Project Engineer will likely encounter one or more of several time-related issues. These include Weekly Statements of time charged, Suspensions of Work, Delays to the Work, and Time Extensions.

Contract Completion Milestones

There are four milestones that help identify when the project has been completed or is nearing completion:

- Substantial Completion — When the contract work is completed to the extent that WSDOT has full and unrestricted use and benefit of the facilities, and only minor incidental work remains to physically complete the total contract.
- Physical Completion — When all of the work is physically completed on the project. Not all the documentation required by the contract necessarily needs to be furnished by the Contractor by this date.
- Completion — When all work specified in the contract is completed and all the obligations of the Contractor under the contract are fulfilled. All documentation has been submitted by the Contractor.
- Final Acceptance — When the State Construction Engineer accepts the contract by signature on the Final Contract Voucher Certification.

1-2.5B Working Day Charges

When contract time for the project is expressed in working days, the first working day will be established in accordance with Section 1-08.5 of the *Standard Specifications* or such other date as prescribed by the contract provisions. Time associated with each phase of work established in the contract is to be shown on the Weekly Statement of Working Days. The Project Engineer is to furnish a weekly statement advising the Contractor of the current status of working day charges against the contract. Weekly Statements are generated by the CCIS computer system. This statement is to be issued in accordance with Section 1-08.5 of the *Standard Specifications*. The purpose of this statement is to advise the Contractor about the Project Engineer's decision for each passing day. Was it a non-working day, a chargeable working day or an unworkable day? In evaluating each day, the Project Engineer should take into consideration the following conditions:

1. The effect of inclement weather on critical activities.

2. The effect of conditions caused by inclement weather on critical activities.

3. Traffic restrictions imposed by the contract or the Project Engineer or other events or conditions beyond the control of the Contractor that affect a critical activity, except where the contract prevents the allowance of unworkable days for specific reasons.

If any of the above conditions prevent work or reduce the Contractor's efficiency on critical activities on the project, working-day charges must be adjusted accordingly. If no work can be performed on critical activities, an unworkable day should be granted. If the Contractor is able to continue work on critical activities but the fficiency is significantly reduced, a partial day may also be charged. However, the use of partial days should be limited to the nearest one-half day.

Section 1-08.5 also allows the Contractor to protest working day determinations and working day charges determined by the Engineer. In the event the Contractor submits the required written proest within 10 calendar days following the date of the statement, the Project Engineer will analyze the decision made, identify any discrepancy, and immediately respond to the Contractor by either denying the protest or transmitting a revised Weekly Statement of Working Days.

The Project Engineer will complete Weekly Statements of Working Days throughout the course of the project, showing both workable and unworkable days as they occur. These statements will continue to be completed until the project has reached Substantial Completion and the Working Days assigned to the contract have been exhausted. Following are the three possible scenarios:

- The working days are exhausted prior to reaching Substantial Completion. Weekly Statements of Working Days continue until Substantial Completion.
- The working days are exhausted on the day Substantial Completion is achieved. Weekly Statements of Working Days cease upon Substantial Completion.
- The working days are not exhausted upon reaching Substantial Completion. Weekly Statements of Working Days continue until the working days are exhausted or until physical completion.

With both these milestones reached, preparation of Weekly Statement of Working Days may stop. When Substantial Completion has been achieved the Project Engineer will ensure that the date is entered into CCIS and is also noted on the remaining Weekly Statements of Working Days.

When contract time is expressed in calendar days, the contract provisions should also be reviewed for guidance in the charging of contract time.

1-2.5C Suspension of Work and Delay

When, in the judgment of the Project Engineer, inclement weather, or conditions caused by inclement weather, make it impracticable to achieve satisfactory results on a critical item of work, an order should be issued to suspend the affected portions of the contract work or the entire project. If at all possible, suspensions for weather should be made with the concurrence of the Contractor. If the Contractor does not agree to a weather suspension, the Project Engineer should consult with the Region construction manager before issuing a unilateral suspension.

In addition, subject to the agreement of the Contractor and the approval of the Regional construction manager, delays caused by other conditions beyond the control of the Contractor may also warrant an order to suspend work.

Short suspensions of less than a week may be shown as unworkable days on the current Weekly Statement of Working Days. If the suspension is of longer duration, for example during a winter shutdown, the publication of Weekly Statements may also be suspended. Notices to suspend or resume work should be written. Forms 421-006 and 421-007 have been developed for this purpose and may be used. A letter will accomplish the same purpose. If it is determined that some items of noncritical work on the project could be continued unaffected by weather conditions, then those items can be excluded from the order to suspend work. The prime consideration for unworkable days or suspensions is always the ability to work on critical items.

In the event that a suspension of work for weather or for other reasons beyond the control of the contractor is necessary for an extended period of time, the Project Engineer may recommend that the Contractor be relieved of routine maintenance during the period of suspension. Before WSDOT will assume the responsibility for maintenance, the Contractor must have taken all necessary actions to control erosion, pollution, and runoff prior to, and during, the shutdown period. The extent of the project area that will be maintained by WSDOT is the subject for a three-party negotiation and agreement among the Project Engineer, the Maintenance Superintendent and the Contractor.

Section 1-08.6 of the *Standard Specifications* provides that the Contractor may be entitled to compensation and/or time extensions if a delay is caused by WSDOT or, in some cases, when the delay is caused by an outside party. Anytime that a project is delayed for any cause, the Project Engineer and the Contractor should consider methods of mitigating the delay damage. A common approach is to pursue schedule recovery or acceleration of the work to get the project back on schedule. When the Project Engineer suspects that the State may be responsible for the delay, then compensation for the mitigation efforts may be proposed.

The suspensions described above are related to weather or other causes beyond the control of the Contractor. They apply only to critical work items and, therefore, always result in a determination of an unworkable day. If the Engineer and the Contractor agree to stop working on a noncritical item for one of these causes but to continue critical work, then the agreement should be noted in the records and weekly statements should be issued in the normal fashion.

The contract also gives the Engineer the right to suspend work on any part of the project when the Contractor is not complying with the contract's terms or the orders of the Engineer. This would be a significant action and, except in an emergency situation, should not be undertaken without the full and informed consent of the Region construction manager. It is highly recommended that the OSC Construction Office also be consulted. If work is suspended under this contract provision, then weekly statements and the charging of workable days will continue in the normal fashion.

1-2.5D Extension of Time

Time extensions are appropriate whenever the critical work is interrupted by a cause that is the responsibility of WSDOT. Time extensions may be related to increases in quantities, to changes in the work or to delays that are the responsibility of WSDOT. In all cases, the increase, change or delay must extend the project duration or an extension is not appropriate.

The contract requires the Contractor to request time extensions within 10 days after the delay occurs. If a delay has been identified, the Project Engineer should enforce this provision. It is acceptable to agree to change order language that defers the discussion of time to a later date. If the delay doesn't occur at an identifiable time (as in the case of a significant overrun of a critical item), then the time extension discussion will probably take place when the final outcome is recognized. Before discussing a time extension for which adequate notice was not given, the Project Engineer should discuss the situation with the Region Construction Manager seeking guidance. It is very important to recognize extended project duration as soon as possible. The Contractor should be encouraged to identify potential time extensions and bring them to the State's attention at the earliest opportunity. If possible, all time associated with an overrun would be addressed in a change order responding to Section 1-04.6. All time associated with added work would be addressed in the change order adding the work and all delay-initiated time extensions would be resolved as soon as the delay was noted and State responsibility established. It would be appropriate to act unilaterally to address time if the contractor avoids the discussion.

If these time issues are not addressed concurrently with the work issues, then a time discussion will be necessary at the time of project closeout, prior to the presentation of the Final Contract Voucher.

The State has a responsibility to inform the Contractor's surety whenever increased time is being considered and the current extension, combined with previous extensions,

would exceed 20% of the original allotted time in the contract. This information could be represented by the Surety's signature on the change order that adds time, by a separate letter from the Surety, or by a notice letter direct to the Surety office. Such notice and surety consent is a legal requirement and will help maintain the State's rights to be protected by the performance bond.

Any time extension will be documented either in a change order with approval levels defined in Section 1-2.4C of this Manual or in a letter to the Contractor from the OSC Construction Office.

1-2.5E Substantial Completion

Substantial Completion may be granted when only minor, incidental items of work, replacement of temporary facilities or correction or repair remain in order to physically complete the contract. In determining Substantial Completion, the Project Engineer should consider whether or not:

- The public has full and unrestricted use and benefit of the facility.
- Major safety features are installed and functional, including guardrail, striping, and delineation.
- Illumination, if required, is installed or a temporary system with equal functional capabilities is operating.
- Signals, if required, are installed or a temporary system with equal functional capabilities is operating.
- The need for temporary traffic control on a regular basis has ceased. There will be no need for lane closures during the hours of darkness nor outside the contract-allowed lane restriction times during daylight hours. Where the contract does not provide lane-closure restrictions, traffic control will not be utilized during rush hour.
- The traffic is operating in its permanent configuration.

The Project Engineer is responsible for determining the Substantial Completion date. When the Project Engineer determines that WSDOT has full and unrestricted use and benefit of the facilities and has set the Substantial Completion date, the Contractor will be notified by letter, specifically noting the date on which Substantial Completion was achieved.

1-2.5F Date of Physical Completion

The date on which the Project Engineer determines that all physical work has been completed is noted and then established as the date of Physical Completion. The Project Engineer will immediately notify the Contractor by letter of the date determined for Physical Completion. Copies of the letter will be sent to:

- The OSC Program Management Office.
- The Railroad companies, if applicable.
- The OSC Accounting Office.
- The Regional TransAid Engineer on all city and county projects.
- The Planning and Programming Service Center Roadway Data Office, MS 47380.
- Any other distribution that the Region deems appropriate.

Actions the Project Engineer should consider taking once Physical Completion has occurred include:

- Initiate a discussion of contract time.
- Identify any unresolved disputes and initiate discussions.
- Initiate a full review of item quantities, seeking contractor concurrence.
- Initiate a final review of materials documentation.
- On Federal-aid projects, initiate a Stewardship Final Inspection.

1-2.5G Liquidated Damages

Liquidated Damages must be resolved before the final estimate can be completed and processed. Guidance for assessing Liquidated Damages can be found in Section 1-08 of the *Standard Specifications*, and in some cases, in the contract provisions.

Any withholding or assessment made against the Contractor's payments, is to be preceded by a fair notice written communication to the contractor. For those issues that could be remedied with actions taken or initiated by the Contractor, this notice should also include a reasonable period of time that will allow the contractor to take action to mitigate or completely avoid the withholding or assessment.

The term "withhold" refers to a temporary deduction shown on a progress estimate. The term "assess" refers to a permanent deduction that could be shown on a progress estimate, but will be shown on the final estimate. Liquidated damages fall into two categories — one deals with contract time and the other deals with miscellaneous provisions such as ramp or lane closures. These two categories are described below.

1-2.5G(1) Contract Time Liquidated Damages

Section 1-08.9 of the *Standard Specifications* (and, at times, the contract provisions) establishes the amount of Liquidated Damages to be assessed the Contractor for overruns in contract time. These assessments are either: (1) the formula-calculated liquidated damages, or the liquidated damages prescribed by the contract provisions; or (2) the direct engineering and related costs. All temporary withholding or final assessment of these Liquidated Damages are to be shown as a below the line "Liquidated Damages" deduction on progress estimates and the final estimate.

The State Construction Engineer has not subdelegated to the Region the authority to assess time-related damages on progress estimates or the final estimate. However, the authority to withhold below the line "Liquidated Damages" on progress estimates has been subdelegated to the Regions, and may be further subdelegated to the Project Engineer. See Section 1-3.1B(5) of this manual. Liquidated Damages

should be addressed whenever it is apparent that the number of working days provided in the contract will be used before Substantial Completion. It is emphasized once again that fair notice and communication is necessary as a legal requirement.

In some cases, there are legitimate reasons for time extensions which would preclude withholding liquidated damages on progress estimates. If the Project Engineer is aware of or anticipates a possible time extension that would preclude withholding liquidated damages on progress estimates, the Region and/or the Construction Office should be consulted for guidance. If the Project Engineer determines that withholding of liquidated damages on progress estimates would not be appropriate, the reasons for not withholding are to be documented by a memorandum to the files. The following describes the procedures for addressing contract time related liquidated damages in the various stages or phases of the project:

- Phases (Interim Physical Completion Dates). Liquidated damages for phases will be shown in the special provisions. When the contract includes additional phases, and the time for physical completion of a phase has overrun, the overrun should be resolved as it occurs. This involves the Contractor either being granted an extension of time or being assessed liquidated damages by the Construction Office.
- After Substantial Completion Date of the Contract. If substantial completion is granted after the expiration of contract time the formula for liquidated damages in Section 1-08.9 of the *Standard Specifications* will be assessed for that period of time between the expiration of contract time and the substantial completion date. Liquidated damages assessed after the date of substantial completion will be only those costs identified as Direct Engineering and related costs that have been incurred by WSDOT. The direct engineering and related costs are defined as field engineering and inspection time charges plus any vehicle, travel pay, per diem, or other charges connected with the delayed contract physical completion. Engineering costs such as computing grades, quantities, etc. which would have been incurred by WSDOT under normal conditions should not be included in the determination of direct engineering and related costs. If substantial completion is granted on or prior to the expiration of contract time, direct engineering costs will only be assessed for that period of time between the date contract time expired and the physical completion date.
- Before Physical Completion. If Substantial Completion has not been established, the formula for Liquidated Damages in accordance with Section 1-08.9 of the *Standard Specifications*, will be assessed for that period of time between the expiration of contract time and the Physical Completion date.

Working days added to the contract by time extensions when time has overrun shall only apply to the days on which Liquidated Damages or Direct Engineering have been charged, such as:

- If Substantial Completion has been granted prior to all of the authorized working days being used, then the number of days in the time extension will eliminate an equal number of days on which Direct Engineering charges have accrued.
- If the Substantial completion date is established after all of the authorized working days have been used, then the number of days in the time extension will eliminate an equal number of days on which Liquidated Damages or Direct Engineering charges have accrued.

1-2.5G(2) Miscellaneous Liquidated Damages

The contract provisions may provide for assessment of other liquidated damages, such as failure to open traffic lanes within the prescribed time or failure to open ramps within the prescribed time. Any temporary withholding or final assessment of these liquidated damages shall be shown as a below the line “miscellaneous” deduction on progress estimates and the final estimates. The Construction Office has subdelegated the authority to the Regions to withhold and assess these types of liquidated damages on progress estimates and the final estimate. The Project Engineer shall notify the Contractor in writing when these type liquidated damages are to be assessed.

1-2.5H Completion Date

Immediately after the Physical Completion date has been established, the Project Engineer is to notify the Contractor of all outstanding documents that are required in order to establish a project Completion Date. Once all the obligations of the contract have been performed by the Contractor, the Project Engineer will provide the Contractor written notice of project completion, identifying the Completion Date established for the contract

In order for the project Completion Date to be established, all the physical work on the project must be completed, and the Contractor must have furnished all documentation required by the contract, contract provisions, and the *Standard Specifications*. This includes the signed Final Contract Voucher Certification. (Note: Establish the Completion Date as soon as the last item of paper work is received. The final estimate does not have to be processed in order to establish the Completion Date.) The notice to the Contractor should be prepared and mailed on the same day that is designated as the completion date. A copy of the completion letter must be faxed to the contract payments section of the Olympia Service Center Accounting Office, (fax number (360)705-6804) on the day the letter is written.

If the Contractor refuses, or is unable to return, a signed FCVC or any of the required documents, the Project Engineer, the Region and OSC Construction can work together to move the project towards closure by establishing a unilateral completion date allowing WSDOT Acceptance of the contract. See Chapter 1-3.1D for Unilateral Acceptance procedures.

Shop Plans & Working Drawings

Working Drawing Type	Const Manual References	Standard Spec References	Number of Copies	Reviewer Prior to Approval	Approving Authority	Distributor of the Approved Drawings	Distribution (surplus copies stay @ PE)	Notes
Cofferdams and Cribs	6-1.5	2-09.3(3)D which refers to Sections 6-01.9 and 6-02.3(16)	6 sets to Bridge 2 sets to PE 4 additional sets to Bridge if RR is involved	Project Engineer & Bridge & Structures Engineer	Bridge & Structures Engineer	Project Engineer	2 sets to Contractor 1 set to Region Const	PE Stamp is Req'd
Precast Concrete Panels	None	6-02.3(28)A	7 sets to Bridge 2 sets to PE 4 additional sets to Bridge if RR is involved	Project Engineer & Bridge & Structures Engineer	Bridge & Structures Engineer	Project Engineer	1 set to OSC Const. 2 sets to Contractor 1 set to Fabrication Inspector	
Bridge Demolition Plans	None	None, See Special Provisions	4 sets	Project Engineer	Project Engineer	Project Engineer	2 sets to Contractor 1 set to Region Const	Bridge demolition is covered in the GSP's (010312.GB6) PE Stamp is Req'd.
Falsework Plans	6-1.5	6-02.3(16)	6 sets to Bridge 2 sets to PE 4 additional sets to Bridge if RR is involved	Project Engineer & Bridge & Structures Engineer	Bridge & Structures Engineer	Project Engineer	2 sets to Contractor 1 set to Region Const	PE Stamp is Req'd
Forming Plans	6-1.5	6-02.3(16)	6 sets to Bridge 2 sets to PE 4 additional sets to Bridge if RR is involved	Project Engineer & Bridge & Structures Engineer	Bridge & Structures Engineer	Project Engineer	2 sets to Contractor 1 set to Region Const	Section 6-02.3(16) notes that plans are not required for walls under 8 foot in height or for footings PE Stamp is Req'd
Plans for Hydraulic Items	7-2	None	7 sets	Project Engineer & Hydraulic Engineer	Hydraulic Engineer	Project Engineer	2 sets to OSC Hydraulic Section 2 sets to Contractor	
Roadside Plant/Weed Control Plan	None	8-02.3(2)	4 sets	Project Engineer	Project Engineer	Project Engineer	2 sets to Contractor 1 set to Region Const.	
Shop Plans for Luminaire and Traffic Signal Poles & Metal Bridge Rail	8-20.2B	8-20.2(1)	6 sets	Project Engineer & Bridge & Structures Engineer	Bridge & Structures for light standards and Types II, III, IV, V and SD signal standards. Project Engineer for Types PPB, PS, and I signal standards shown on Standard Plan J-7a.	Project Engineer	2 sets to Contractor 2 sets to Fabrication Inspector	Shop drawings are only required for signal and light standards without pre-approved plans.
Post-Tension Details	6-2.8	6.02.3(26)D	7 sets to Bridge 2sets to PE	Project Engineer & Bridge & Structures Engineer	Bridge & Structures Engineer	Project Engineer	1 set to OSC Const. 2 sets to Contractor 1 set to Region Const.	

Figure 1-6 *(page 1 of 2)*

Working Drawing Type	Const Manual References	Standard Spec References	Number of Copies	Reviewer Prior to Approval	Approving Authority	Distributor of the Approved Drawings	Distribution (surplus copies stay @ PE)	Notes
Shop Detail Plans of Prestressed Concrete Girders, Prestressed & Precast Conc Piles,	6-2.7A	6-02.3(16)B and 6-02.3(25)A None for Pilings	5 sets	Project Engineer & Bridge & Structures Engineer	PE can approve standard series I girders and concrete piling on standard plans E-4 & E-4a - all other prestressed concrete products and precast piles to Bridge & Structures for approval	Project Engineer	1 set to Contractor 2 sets to Fabrication Inspector	
Prestress Girder Erection Plans	None	6-02.3(16) and 6-02.3(25)N	6 sets to Bridge 2 sets to PE 4 additional sets to Bridge if RR is involved.	Project Engineer & Bridge & Structures Engineer	Bridge & Structures Engineer	Project Engineer	2 sets to Contractor 1 set to Region Const	PE Stamp is Req'd
Shop Plans for Sign Structures	8-21.3	8-21.3(9)A which refers to Section 6-03.	6 sets	Project Engineer & Bridge & Structures Engineer	Project Engineer for Standard Plans G2 through G9a Bridge & Structures for special design sign structures or sign fittings	Project Engineer	2 sets to Contractor 2 sets to Fabrication Inspector	
Shop Plans for Standard Plan Items	1-2.4I	None	6 sets	Project Engineer	Project Engineer	Project Engineer	2 sets to Contractor 1 set to Fabrication Inspector	
Shop Plans for Structural Steel for Bridges	6-3.1	6-03.3(7) Erection plan also required 6-03.3(7)A	8 sets to Bridge 2 sets to PE 4 additional sets to Bridge if RR is involved.	Project Engineer & Bridge & Structures Engineer	Bridge & Structures Engineer	Project Engineer	1 set to Region Const. 2 sets to OSC Mat'ls Lab 2 sets to Contractor	
Treated Timber Structures	6-4.1	6-04.3(3)	6 sets	Project Engineer	Project Engineer	Project Engineer	2 sets to Contractor 1 set to Fabrication Inspector	
Water Distr Conc Cyl Pipe	9-4.67	None	7 sets	Project Engineer & Hydraulic Engineer	Hydraulic Engineer	Project Engineer	2 sets to OSC Hydraulic Section 2 sets to Contractor	
Welding Reinforcing Steel	6-2.6D	6-02.3(24)E	7 welding procedure	Project Engineer & Bridge & Structures Engineer	Bridge & Structures Engineer	Project Engineer	2 sets to Contractor 2 sets to Fabrication Inspector	
Welding Steel Piling	6-5.6	6-05.3(6) 6-03.3(25)	7 welding procedures	Project Engineer & Bridge & Structures Engineer	Bridge & Structures Engineer	Project Engineer	2 sets to Contractor 2 sets to Fabrication Inspector	
Welding Structural Steel	6-3.6C	6-03.3(25)	8 sets to Bridge 2 sets to PE 4 additional sets to Bridge if RR is involved.	Project Engineer & Bridge & Structures Engineer	Bridge & Structures Engineer	Project Engineer	1 Set to Region Const. 2 sets to OSC Mat'ls Lab 2 sets to Contractor	Welding procedures must be submitted with shop drawings. (Section 6-03.3(25))

Figure 1-6 *(page 2 of 2)*

1-2.6 Enforcement of Wage Rate Requirements

1-2.6A General Instructions

Section 1-07.9 of the *Standard Specifications* outlines prevailing wage responsibilities for the Contractor, subcontractors, lower-tier subcontractors, agents or any other persons performing work under the contract. Additionally, contracts financed in whole or in part with federal funds have the *Required Contract Provisions for Federal-aid Construction Contracts* (FHWA-1273*)* included in the contract documents. These provisions identify additional federal wage requirements.

Contracts that are financed by either state or federal funds, or both, will include specific Hourly Minimum Wage Rates and Fringe Benefit schedules from either or both the Washington State Department of Labor and Industries (State L&I) and the United States Department of Labor (USDOL). When both state and federal funds are involved and there is a difference between the two prevailing wage determinations, the Contractor, subcontractors, and lower tier subcontractors must pay a wage of not less than the higher of the two in order to remain in compliance with both prevailing wage laws. Comparisons that are made between state and federal wage rates must include their corresponding fringe benefits as identified in their respective state or federal wage determinations.

1-2.6B Monitoring of State Requirements

The requirements for the Contractor's compliance with State prevailing wages are noted in Section 1-07.9 of the *Standard Specifications*. Specific wage rate determinations for State prevailing wages are noted in the contract itself. Though certified payrolls can be requested regardless of the contract's source of funds, these are a specific requirement or enforcement of federal wage laws only and are not normally used for monitoring of State prevailing wage issues.

Requirements for State prevailing wages include:

- Section 1-07.9 requires that the Contractor submit a *Statement of Intent to Pay Prevailing Wages* (SI) prepared on the State L&I form and approved by that agency. Statements are required for the Contractor and for each subcontractor, agent and lower-tier subcontractor. The specification requires that no progress payments be released to the Contractor for work completed by the Contractor, or for portions of work completed by subcontractors, agents or lower tier subcontractors prior to the Project Engineer's receipt of the approved statement for the entity performing the work. State L&I will approve the statements and further certify that the documents meet the requirements of State laws.
- After the project has been accepted by WSDOT, the Contractor, all subcontractors, and all lower-tier subcontractors must submit an *Affidavit of Wages Paid* (AWP) prepared on the State L&I form and approved by that agency. (The form may be submitted earlier by a subcontractor or lower tier subcontractor should that firm's work be completed prior to acceptance.) It is the Contractor's responsibility to obtain and provide all AWP to the Project Engineer for all subcontractor and lower-tier subcontractors performing work on the project. In the event a subcontractor or lower tier subcontractor cannot or will not provide a completed AWP form, the Contractor should consult or seek guidance from State L&I. Failure to provide all required AWP for all contractors who worked on the project will result in continued withholding of the prime Contractor's retained percentage.
- A contractor or subcontractor may enter into an agreement with his or her employees to work 10 hours per day without having to pay overtime. This is provided that no employee work more than 4 calendar days a week.
- State L&I has also defined "Contractor" to include some fabricators or manufacturers who produce nonstandard items specifically for use on the public works project. Additionally some companies who may contract with the Contractor, subcontractors, or lower-tier subcontractors for the production and/or delivery of gravel, concrete, asphalt, or similar materials may perform activities that cause employees of these firms to be covered by state prevailing wage laws.

  Specific circumstances that may cause employees of theses firms to be covered by State prevailing wage laws are described in State L&I publications. These publications are included in the provisions of each contract adjacent to the State Prevailing Wage listings. Where these firmsare covered by State prevailing wage laws, an approved *Statement of Intent to Pay Prevailing Wages* and *Affidavit of Wages Paid* must be submitted to the Project Engineer on State L&I forms.

The Project Engineer should monitor the Contractor's efforts in regards to state prevailing wages by:

- Monitoring to ensure an approved Statement of Intent is received prior to releasing any progress payments for work completed by the Contractor, subcontractor or lower tier subcontractors as well as any fabricators or suppliers of materials whom L&I may also determine as being covered.
- Monitoring to ensure that Affidavits of Wages Paid have been received for the Contractor as well as each subcontractor or lower tier subcontractor who performed work on the contract. In addition, AWP are also required of each fabricator or supplier who was also covered by state prevailing wages.
- Monitoring by observing concerns of employees of the Contractor, subcontractors, or lower tier subcontractors. In particular, the Project Engineer should note any employee complaints regarding specific state prevailing wage violations by the employer.

In the event the Project Engineer identifies or receives a complaint from any employee of the Contractor regarding improper application or nonpayment of state prevailing wages, or improper application of overtime pay, the Project

Engineer should immediately notify the Contractor requesting prompt corrective action. All issues of noncompliance involving either the Contractor, subcontractor, and any lower tier subcontractors are to be addressed through the Prime Contractor for resolution.

Once the Contractor has been informed that an apparent violation of state prevailing wages has occurred, it is expected that a satisfactory correction or explanation will be made within a reasonable period of time. If this does not happen, the Project Engineer should inform the Contractor that the matter may be referred to the Washington State Department of Labor and Industries (L&I) for further action. If the failure to act continues, the Project Engineer should refer the issue to the Region Construction Manager.

Except as noted for missing Statements of Intent, routine monthly progress payments made to the Contractor for work completed should not be deferred for enforcement of state prevailing wage laws. The OSC Construction Office will refer the matter to State L&I for further investigation that may be appropriate. Should State L&I choose to investigate, L&I will establish the amount of any unpaid wages due employees of the contractor. In order to recover these wages for employees, L&I may choose to file a claim against the Contractor's retainage held under the contract. State L&I may also choose to recover unpaid wages by requesting that the Project Engineer withhold funds from monthly progress estimates for work completed by the Contractor.

1-2.6C Enforcement of Federal Prevailing Wage Provisions

In addition to the requirements of Section 1-07.9 of the *Standard Specifications*, all contracts financed with Federal-aid funds include the *Required Contract Provisions for Federal-aid Construction Contracts* (FHWA-1273). These provisions identify federal wage requirements. The federal prevailing wage requirements included in these provisions are also commonly referred to as Davis-Bacon and Related Acts (DBRA). It is the responsibility of the Project Engineer to both monitor and enforce these provisions to the degree necessary to ensure full compliance. In order to comply with these requirements, the Contractor must:

- Submit weekly certified payrolls to the Project Engineer for themselves, each subcontractor, and each agent or lower-tier subcontractor. These consist of copies of weekly payrolls along with a signed Statement of Compliance.
- Post wage rate posters.
- Post the wage determinations of the United States Secretary of Labor. These determinations consist of the listing of Federal Wages that are included in the provisions of each contract.
- Allow interviews of employees during working hours by authorized representatives of WSDOT, the Federal Highway Administration, and the U.S. Department of Labor.

The prime Contractor is ultimately responsible for all subcontractor, agent, or lower-tier subcontractor compliance with the requirements for federal prevailing wages.

1-2.6C(1) Federal Prevailing Wage Rates

The Contractor must post the federal wage determination, consisting of the wage listing included in the contract provisions, in a prominent place where it can easily be seen by workers. Standard posters (forms FHWA 1495 and FHWA 149SA) are also to be posted and are available to the Region from the Support Services Supervisor, FHWA, Olympia, Washington. Form FHWA 1495A is printed in Spanish and is to be posted when the project is in an area where there is a possibility that some workers may only speak Spanish.

1-2.6C(2) Certified Payroll Inspection

The "Contract Provisions for Federal-Aid Construction Contracts" (FHWA-1273) require the Contractor, subcontractors, agents or lower-tier subcontractors to submit certified payrolls. These are to be checked by the Project Engineer to ensure the required information has been included and is correct. The Project Engineer should accomplish this by making a complete check of the first payroll submitted on the project by the Contractor, each subcontractor, and each lower-tier subcontractor. Once satisfied that these first payrolls are correctly prepared, subsequent payrolls for that project may be accepted by a random spot-checking of approximately 10 percent of the payrolls submitted. If errors are found during any spot-check of the payrolls, a more complete or thorough check should occur until the Project Engineer has determined that the errors detected have been corrected and monitoring can be returned to a spot-checking basis. The *Contract Provisions for Federal-Aid Construction Contracts* (FHWA-1273) identify the required items to be included in certified payrolls. A complete payroll inspection by the Project Engineer should confirm that the following items are present:

- The contract number and contract name noted on the payroll form, together with the payroll number and payroll period. The name of the employer, identifying the Contractor, subcontractor, or lower-tier subcontractor, must be shown.
- A specific minimum wage rate is to be identified for each worker. The *Standard Specifications* require the Contractor to use word descriptions for the labor classifications that are included in the contract provisions identifying federal wage rates, and are to be used on all payrolls. Section 1-07.9 of the *Standard Specifications* permits the Contractor to use an alternative method to identify or correlate the labor descriptions used in order that they may be compared to the contract provisions.
- Each employee's Social Security number and permanent address must appear on the first payroll on which their name appears, or on a separate list attached to the payroll. Changes in address must be reported.

- Payroll deductions must conform to the "Anti-Kick-back" Act noted in the *Required Contract Provisions for Federal-aid Construction Contracts* (FHWA-1273). If payroll deductions are questionable, contact the OSC Construction Office for assistance.
- Every laborer or mechanic working on the contract must be classified for the proper minimum prevailing wage in accordance with the designated wage determination. If a classification of worker is used that does not appear in the contract special provisions, Section 1-07.9 of the *Standard Specifications* makes it the Contractor's responsibility to contact the U.S. Department of Labor for a determination of the proper wage rate. The *Required Contract Provisions for Federal-aid Construction Contracts* (FHWA-1273) provides a method for resolving this.
- All payrolls must have a statement of compliance signed and in the form prescribed by Section V of the *Required Contract Provisions Federal-aid Construction Contracts* (FHWA-1273).
- The Contractor, subcontractor, or lower tier subcontractor, in accordance with the requirements of DBRA, must certify all payrolls. This certification contains four elements:
    - That the payroll copy furnished is a true copy;
    - That the payroll is correct and complete;
    - That the wage rates contained therein are not less than those determined by the Secretary of Labor, and that the classification set forth for each laborer or mechanic conforms with the work being performed; and
    - That the appropriate fringe benefits due each employee have been paid in full.

Subcontractors and lower-tier subcontractors are required to submit payrolls through the Prime Contractor to the Project Engineer. Any payrolls which do not comply fully with the requirements outlined above must be corrected by a supplemental payroll.

1-2.6C(3) Employee Interviews

The Project Engineer must conduct periodic employee interviews. The purpose of these spot interviews is to establish, with reasonable certainty, that the provisions for federal prevailing minimum wages are being complied with and that there is no misclassification of workers or disproportionate employment of laborers, helpers, or apprentices. The occupation description must be shown on the form used for the employee interview noted under current duties. The occupation description is noted in the wage listing included in the contract provisions.

Some employees may refuse to reveal their rate of pay. This is acceptable and should be noted in the remarks column. Many employees do not know or may guess at the rate. If possible, a determination of the accuracy of the stated rate should be made, and any uncertainty noted in the remarks column to reduce the need for follow-up interviews. If either the stated rate (from the employee) or the record rate (from the certified payroll) is below the minimum rate (from the contract wage listing), an investigation by the Project Engineer must be conducted. The investigation may be as simple as a follow-up interview with the employee or a more in-depth investigation may result in a requirement for a supplemental payroll. In any event, the matter must be resolved so that the employee interview report describes what corrective action was taken to ensure that the employee has been paid the minimum prevailing wage rate. This corrective action is to be reported under remarks on the form or by attached memo if more space is needed. All discrepancies found must be resolved.

The frequency and extent of these interviews should be sufficient to ensure a representative sampling has been made for all classes of workers employed on the contract. A minimum sampling should include employees of the Contractor and all major (30 percent or more of the contract dollars) subcontractors. The interviews should be made with such frequency as may be necessary to ensure compliance. Employee Interview Report, Form 424-003, is used to record and report interviews.

1-2.6C(4) Complaints

Any complaints regarding violations of minimum wage rate regulations should be referred to the Project Engineer by employees of the Contractor, subcontractor, or lower tier subcontractors, should be treated as confidential, and should be promptly investigated by the Project Engineer. If there are questions regarding complaints and the application or interpretation of the federal prevailing wage provisions, the Project Engineer should consider referring the issue to the Region Construction Manager or contacting the OSC Construction Office for further assistance.

1-2.6C(5) Federal Prevailing Wage Violations

In the event the Project Engineer identifies or receives a complaint from any employee of the Contractor regarding improper application or nonpayment of federal prevailing wages, improper application of overtime pay, or any other requirement noted in the *Required Contract Provisions for Federal-aid Construction Contracts* (FHWA-1273), the Project Engineer should immediately notify the Contractor requesting prompt corrective action. All issues of noncompliance involving either the Contractor, subcontractor, and any lower-tier subcontractors are to be addressed through the prime contractor for resolution.

If the Project Engineer determines the Contractor is in violation of the provision noted in the FHWA 1273 or Section 1-07.9 of the *Standard Specifications*, the Contractor should be immediately informed and requested to make the necessary corrective actions. Once the Contractor has been informed that an apparent violation has occurred, it is expected that a satisfactory correction or explanation will be made within a reasonable period of time. If this does not happen, routine monthly progress payments made to the Contractor for works completed, may be deferred by the Project Engineer for enforcement of these provisions. If the failure to act continues, the Project Engineer should refer the issue to the Region Construction Manager.

1-2.6C(6) Department of Labor Investigation

The U.S. Department of Labor may investigate compliance with the DBRA and the Contract Work Hours and Safety Standard Act (CWHSSA) when conducting any investigations relative to compliance with the Fair Labor Standards Act or any other acts under its enforcement authority. Investigative action taken by the U.S. Department of Labor with respect to DBRA and CWHSSA do not, in any way, change the degree of authority or responsibility of WSDOT for enforcement of these Acts. Any actions taken by the U.S. Department of Labor should be considered as services we may use to assist us in our enforcement activities but, should not be considered to relieve us of our basic responsibility to investigate fully all potential violations and to apply such sanctions as are deemed applicable under our enforcement authority to ensure compliance.

1-2.6C(7) Fraud Notice Poster

Fraud Notice, FHWA 1022, Title 18 USC 1020, must be displayed on all Federal-aid projects during the course of the work. This notice points out the consequences of any impropriety on the part of any contractor or WSDOT employee working on the project.

1-2.7 EEO, D/M/WBE and Training

1-2.7A Overview

Recent changes in both State and Federal laws have required a variety of guiding requirements. As a result individual contracts may have different guiding requirements depending on what laws were in place at the time the contract was executed and how the project is funded. The special provisions, *Standard Specifications*, and amendments determine the specific requirements for each project. The *Construction Manual* is one of many resources available for general information on the obligations and policy of WSDOT with regard to external civil rights. Other resources include:

1. Office of Equal Opportunity (OEO): OEO monitors, maintains, and updates WSDOT Equal Employment Opportunity (EEO) policies and commitments to FHWA. As part of that effort they maintain the following documents which are available through the OEO homepage:

- Equal Employment Opportunity Compliance Program (EEO and On the Job Training)
- Disadvantaged Business Enterprise Participation Plan (contract goals, if included in a project, may be voluntary and mandatory)
- Title VI Plan (nondiscrimination)

2. *Standard Specifications*, as follows, apply to all projects:

- 1-07.11 Requirements for Nondiscrimination
- 1-08.1 Subcontract Completion and Return of Retainage Withheld

3. General Special Provisions as may be included in the contract include:

- Minority and Women's Business Enterprise (MWBE) Participation (included in projects financed with only State funds)
- Requirement for Affirmative Action to Ensure Equal Employment Opportunity (included in projects with FHWA participation)
- Disadvantaged Business Enterprise Participation (included in projects with FHWA participation) Special Training Provisions (included in projects with FHWA participation and only if the contract is selected for training)
- Indian Preference and Tribal Ordinances (TEROs) (only if the project includes work on the reservation and only if the ordinances exist)

While some requirements and provisions apply to all projects, others apply to projects with State funds only and others yet apply to projects that are partially or fully financed with Federal funding.

1-2.7B EEO (Federally Funded Projects)

WSDOT has committed to FHWA to perform comprehensive construction compliance reviews to ensure that the requirements of Section 1-07.11 have been adhered to. This review is performed by the OEO on a selected number of FHWA funded projects and may take place at any point during the life of the project or after the project has been completed. A contractor that found in violation of the contractually required affirmative action good faith efforts will be invited to a compliance conference to develop a corrective action plan. Failure to accept and comply with a corrective action plan may result in sanctions. The records that have been maintained at the Contractor's office will be utilized for these reviews. The FHWA also retains the authority to review the Contractor's records for EEO compliance. These reviews do not normally involve the project office other than notification of their occurrence and the resulting findings.

1-2.7B(1) Prompt Return of Retainage to All Subcontractors

As a condition of receiving Federal funding, WSDOT is required to ensure prompt payment to all subcontractors on all contracts regardless of funding. State statutes (Revised Code of Washington, RCW) pertaining to prompt pay require that the contracting agency make prompt payment to the prime contractor and that the prime contractor, in turn, pass these payments on to subcontractors in a timely manner.

Return of the subcontractor's retainage held by the prime contractor is required by the *Standard Specifications*. This is a race neutral effort intended to support and encourage all small businesses. Therefore, in accordance with the contract provisions, the prime contractor is required to release any and all retainage to the subcontractor within a designated time period after subcontract completion. The Project Engineer has no role in this process other than to respond to allegations of non-compliance with this contract requirement as with any other. We need to keep in mind that our

contract is with the prime contractor and as a result, we are not a party to the prime contractor's subcontract documents. We should avoid becoming involved in prime's relationship with their subcontractors.

In the prime contractor's effort to determine completion of subcontract work, as required by the contract provisions, the Project Engineer may be asked to determine completion of a portion of the work. While we need to work with the Contractor to comply with the requirements of the specification, we should also take specific care to not issue partial punch-lists or to place ourselves in a position of "accepting" portions of the work. In some cases we may provide the Contractor relief under certain conditions as described in Section 1-07.13 of the standard specifications, "Contractor's Responsibility for the Work."

1-2.7C EEO (State Funded Projects)

The Contractor is required to comply with the EEO requirements detailed in the *Standard Specifications* Section 1-07.11, Requirements for Nondiscrimination. In general, these requirements include having an EEO officer, developing, maintaining, making known, and utilizing an EEO program. The Project Engineer should be alert for and respond to any indications or accusations of discrimination and if substantiated, take appropriate actions. The Office of Equal Opportunity and your regional OEO staff are available for guidance and assistance in these types of situations.

1-2.7D EEO (Federally Assisted Projects)

The requirements for EEO and nondiscrimination for federally assisted contracts are similar to what's required for State-funded projects. However, additional monitoring, reporting, and authority are mandated by Federal laws as noted in the Federal contract requirements known as the "FHWA 1273." The "FHWA 1273" is included in every Federally assisted contract. These requirements are reiterated in the *Standard Specifications* Section 1-07.11, Requirements for Nondiscrimination.

Reporting

- Federal-Aid Highway Construction Contractors Annual EEO Report, Form FHWA - PR1391 — This form is required for all Federally assisted projects provided the prime contract is equal to or greater than $10,000 and for every associated subcontract equal to or greater than $10,000. Each contract requires separate reports be filed for the prime contractor and each subcontractor (subject to the above noted criteria.) These forms are due by August 25th each year in which work was performed in the month of July.

  The payroll period to be reflected in the report is the last payroll period in July in which work was performed. A contractor who works on more than one Federally assisted contract in July is required to file a separate report for each of those contracts. For multi-year projects, a report is required to be submitted each year work was performed during the month of July throughout the duration of the contract. A responsible official of the company must sign the completed report.

  Upon receipt, the Project Engineer will forward this annual report to the Region's EEO Officer by September 17th. The Region EEO staff at the direction of the OEO will compile and report the information noted on the forms. The figures reported must reflect the number of employees, not hours, in each category, with subtotals broken out for women and minorities and grand totals for the category. Tables A through E reflect both apprentices and on-the-job trainees that were also utilized within each trade. The form must also include the corresponding subtotals in each category, A through E, broken out by both women and ethnicity.

- Summary of Employment Data Report, Form FHWA - PR1392 — The Olympia Service Center Office of Equal Opportunity (OEO) has developed a program for the reporting of WSDOT's EEO accomplishments. This program, Equal Employment Opportunity Contractor Compliance Program, requires WSDOT to submit a summary of employment data to FHWA for each Federal fiscal year. This Summary of Employment Data Report, PR1392, is prepared from forms PR-1391 (monthly report) that have been submitted to the Region by the Project Engineer's offices. This summary is prepared by the Region EEO lead or other Region designee for each Federally assisted project. This reporting also includes Local Agency projects administered through the Region's Highways and Local Programs offices. The completed PR-1392 summary reports, including all forms PR-1391, are then submitted by the Region EEO lead to the Olympia Service Center Office of Equal Opportunity by September 24th each year.

- Monthly Employment Utilization Reports, WSDOT Form - 820-010 — This form is required for all federally assisted projects if the prime contract is equal to or greater than $10,000 and for every associated subcontract equal to or greater than $10,000. This report includes the total work hours for each employee classification as well as the total number of employees, broken out by ethnicity, in each trade, for each WSDOT project. Instructions for completing the form can be found on the back of the form itself. These monthly reports are to be maintained by the Contractor in the respective prime or subcontractor's records.

  Where the prime's contract is valued at $100,000 or more, the Contractor shall submit copies of the prime's completed WSDOT Form 820-010 to the Project Engineer. The prime contractor shall also collect and submit these forms monthly from every subcontractor who holds a subcontract with a value of $100,000 or more. These reports are to be submitted to the Project Engineer by the 5th of each month. The project office has a responsibility to make sure these forms are submitted in accordance with the contract requirements. Upon receipt, the Project Engineer will forward the report to the Region EEO staff. The region EEO staff, at the direction of the OEO, will compile, report, and take any action necessary with regard to the

information provided by these forms. As a result it is not necessary that copies of these reports be maintained in the project files.

Records Retention and Reviews

The Contractor is required to maintain all project records, including the aforementioned EEO records, for three years following completion of the contract.

1-2.7E Minority and Women Owned Business Enterprise (MBE, WBE)

MBE, WBE is the designation for holding State certification as a minority or women owned business enterprise. The State Office of Minority and Women's Owned Business Enterprises (OMWBE) certifies businesses as either a minority owned business (MBE), a women owned business (WBE), or a combination of both (M/WBE). On projects funded in whole or in part with State funds, the contract provisions will include a MBE, WBE special provision. This provision may specify voluntary goals for the Contractor's utilization of M/WBE. The provision also includes suggested methods for encouraging M/WBE participation. As noted, these requirements are indeed voluntary and there are no preferences for accomplishment nor sanctions for noncompliance.

MBE/WBE Reporting

- Annual Report of Amounts Paid MBE/WBE Participants (Form 421-023). In accordance with Section 1-08.1 of the *Standard Specifications*, an Annual Report of Amounts Paid MBE/WBE Participants (Form 421-023) is required from the prime Contractor for all projects funded entirely by State funds. When a project contains Federal assistance, the Federal quarterly reporting requirements for DBE utilization override the States requirements, eliminating the need for the State's annual report of amounts paid.

  This Annual Report of Amounts Paid MBE/WBE Participants report reflects the State fiscal year, July 1 through June 30, and is to be submitted to the Contracting agency by the 20th of July each year and/or upon physical completion of the contract. The dollar amounts shown in the report are those amounts paid to the MBE/WBE firms during the reporting period. The final report is to show only the dollar amounts paid since July 1st through the Physical Completion date. The Region is responsible for entering this data into CCIS. The completed form is maintained as a part of the project records and becomes a part of the temporary final records upon completion.

1-2.7F Disadvantaged Business Enterprise (DBE)

DBE is the designation for holding Federal certification as a Disadvantaged Business Enterprise. On Federally funded projects there will normally be a DBE requirement of some sort specified by the contract special provisions. This special provision will be one of two types:

1-2.7F(1) GSP Includes Voluntary Goal, or Does Not Have a Goal

When a *Voluntary Goal or No Goal* is specified, the Contractor is encouraged to take actions that promote DBE participation. The goal is intended to draw the bidders attention to the opportunity to subcontract with DBE's. However, these requirements are indeed voluntary and there are no preferences for accomplishment nor sanctions for non-compliance.

1-2.7F(2) GSP Includes Condition of Award (COA) Goal

When *a Condition of Award Goal* (COA) is specified, the Contractor is required to employ DBE participation to at least the extent identified in the contract special provisions.

- As a *Condition of Award*, the Contractor must commit to and follow through on; subcontracting at least the amount identified by the COA goal to certified DBE firms or make a good faith effort to do so.
- Measurement of attainment is not simply the payments made to the DBE. Attainment is measured in accordance with the provisions of the "DBE Participation" section of the contract special provisions.
- Changes to the amounts specified for COA must be made in accordance with the procedures outlined in this section.

1-2.7F(3) Additional Execution Documents

Successful bidders will be required to provide a "Bidders List" to the Department. This list is to include the names and addresses of every firm that submitted a bid or quotation to the Prime, whether or not that bid was used as part of the overall proposal. The Contractor is directed to send this list directly to the Office of Equal Opportunity at the Olympia Service Center and normally the Project Engineer will have no involvement.

1-2.7F(4) DBE Reporting

The contract special provisions require the Contractor to submit to the Project Engineer a "Quarterly Report of Amounts Credited as DBE Participation" for each quarter and upon completion of the project. Again, the measurement is not simply the payments made to the DBE, rather it is in accordance with the "DBE Participation" section of the contract special provisions.

1-2.7F(5) On Site Reviews

- **Contract Includes Condition of Award Goal** — On site reviews shall be conducted on contracts that include COA goals when the COA subcontractor starts work, during the peak period of the subcontractor's work, and whenever there is a change in the nature or methods of the work. On-site reviews are also required when a COA subcontractor is replaced. The intent of the overall program and hence the review is to document that the DBE is indeed in control of the work and performing a *"Commercially Useful Function"* (CUF) as described by the specification. The on-site review

is a "snapshot in time" and should record personal observations, documentation reviews, and personnel interviews as applicable. A copy of the completed on site review form (272-051) should be forwarded to the Office of Equal Opportunity. The Condition of Award letter requires that the identified DBE firms perform specific item(s) of work for the estimated dollar amounts included in the proposal. The letter also identifies whether a firm performs as a "subcontractor," "manufacturer," or "regular dealer." DBE compliance issues should be brought to the attention of the Olympia Service Center Construction Office.

- **Contract Includes Voluntary Goal or No Goal** — The state has an obligation to make sure the quarterly reports are reasonably accurate. Taking credit for DBE accomplishments in the reports requires that the DBE perform a commercially useful function. WSDOT has committed to FHWA to perform the necessary number of on-site reviews such that the project engineer is comfortable that the quarterly reports are accurate. It is suggested that at least one on-site review be performed on any DBE that performs a substantial amount of work. Reviews should also be performed when the situation warrants such as sharing of resources with the prime.

1-2.7F(6) Changes to the Condition of Award (COA)

The Contractor is required to utilize the COA subcontractors, manufacturers, etc., to perform the work as listed in the COA letter. Substitution of another DBE is allowed if:

- A COA DBE firm becomes decertified, or
- The contractor proposes a change to the contract that reduces DBE COA participation, or
- The prime contractor provides documentation that a DBE firm is unwilling or unable to perform the work.

Exceptions to the substitution requirement may be allowed under any of the following circumstances:

- WSDOT deletes the COA firm's intended work.
- The contractor can show substantial financial loss if a substitution is required.
- The work has progressed to the point where no other work remains to be subcontracted.
- The DBE subcontractor has taken the positive step of graduating from the DBE program.

1-2.7F(7) Substitution

Substitutions must meet the following requirements:

- The new firm must do an equal dollar value of work on the contract.
- The change order does not increase the dollar amount of the original goal.

1-2.7F(8) Condition of Award (COA) Change Orders

Changes to the contract COA amounts must be made through a change order. The amounts shown in the COA change order should be limited to the credit necessary to accomplish the original contract goal amount as follows:

- An explanation of why the change is necessary.
- Identification of both the deleted work and the added work.
- Revised subtotals for each affected DBE firm.
- Revised total attainment for DBE participation.
- Documentation of a good faith effort to substitute should go in the change order file, (if required, see 1-2.7F(6)).

The Region may execute change orders deleting COA work where WSDOT has initiated the change. The Olympia Service Center Construction Office must execute change orders that include contractor proposed revisions that change the COA commitment. When preparing the change order in CCIS pending CO's menu use option 3, "Condition of Award Items." Include the first three items listed above in the change order document. When submitting the change order to the Contractor for signature, the Project Engineer should also send copies to the affected DBE firms and should advise the Contractor that this has been done.

1-2.7G On-the-Job Training (OJT)

1-2.7G(1) On-the-Job Training Special Provisions — General

The requirements for training are made a part of the contract by the special provision, Special Training Provisions. The amount of training is set by the Office of Equal Opportunity based on the opportunities presented by the work and the needs in the geographical area involved. The requirements for trainee, training plan approval, and trainee payment are all specified in the contract special provisions.

1-2.7G(2) OJT Required Reports

The contract provisions allow the Contractor to accomplish training as part of their work activities, or through the activities of their subcontractors or lower tier subcontractors. However the prime contractor is designated as being solely responsible for the completion of the training requirements as they are outlined in the contract provisions.

- Form DOT 272-049 Training Program — A training program is to be completed by the Contractor. The report must be submitted to the Engineer no later than the cutoff date established for the first progress estimate. The Project Engineer's office may approve Bureau of Apprenticeship Training (BAT) or the State Apprentice Training Committee (SATC) programs provided they meet the requirements specified in the contract provisions. The Region may also approve a non-SATC or BAT program once concurrence has been received from the OSC/Office of Equal Opportunity (OEO is required to obtain approval from FHWA

before concurring.) Regardless, one copy of Region approved Training Programs should always be submitted to the OSC Office of Equal Opportunity.

- Form 272-050 Apprentice/Trainee Approval Request — Approval of an individual trainee cannot be authorized until an approved Training Program is filed with the Region. This form is to be submitted by the Contractor for each trainee to be trained on the project. When a BAT/SATC apprentice/trainee is first enrolled, a copy of the apprentice/trainee's certificate showing apprenticeship/training registration must accompany the Trainee Approval Request. Trainees are approved by the Project Engineer's office based on the criteria in the special provisions.
- Form DOT 272-060 Federal-aid Highway Construction Annual Training Report — This report is to be completed annually by the Project Engineer summarizing the training accomplished by the individual trainees during the reporting period beginning June 1 of the previous year and ending May 31 of the current year. This report is due at the Regional EEO Office by June 10th of each year.

1-2.7G(3) Payment for "Training"

At progress estimate cutoff time, the Contractor shall submit a certified invoice requesting payment for training. The invoice must provide the following information for each trainee:

- The related weekly payroll number
- Name of trainee
- Total hours trained under the program
- Previously paid hours under the contract
- Hours due for current estimate
- Dollar amount due for current updated estimate

Retroactive payment may be allowed provided:

- The Training Program is approved
- There are no outstanding issues or circumstances that would have prevented approval of the apprentice/trainee

Increases in training hours are allowable and may be approved on a case-by-case basis by the Project Engineer in consultation with the Regional EEO Officer.

1-2.8 Control of Work

1-2.8A Auhority of the Project Engineer

The Project Engineer is given considerable authority to enforce the provisions of the contract under Section 1-05.1 of the *Standard Specifications*. This authority is tempered by WSDOT's policies and delegation of authority from the Engineer to the Project Engineer. Accordingly, considerable care and professional judgment must be exercised by the Project Engineer in order to avoid exceeding the authority as delegated and to avoid decisions or actions that may be contrary to WSDOT policy. Should there be any doubts as to the limits of authority, the Project Engineer should consult the Regional Construction Manager.

In many cases, the courts have held that where the Project Engineer has exceeded the authority provided in the plans and specifications or the authority delegated by the Engineer, the actions of the Project Engineer are binding upon WSDOT. Because of this, it is important that the Project Engineer make no instructions, verbally or by written memoranda, that are outside the scope of the plans, specifications, contract provisions, or the authority delegated by the Engineer.

In advance of or during the course of the project, in the interest of economy and efficiency, noncritical items of work may be identified for which the Project Engineer may choose to modify the normal inspection or testing procedures. In taking these actions, the Project Engineer is acting under the professional responsibility inherent in all actions as a representative of the Department and a Licensed Professional Engineer. Full accountability of such incidents is expected. The scope of such actions should not exceed $10,000 for a single bid item, nor exceed $25,000 for an entire project.

The nature of the work to be accepted in this manner will generally be limited to minor and isolated items. Acceptance would typically involve dimensional conformance to the plans and a visual determination that the materials are suitable, however, the Project Engineer may require some testing or other means to support a decision. In such action, the Project Engineer should be guided by the principle of achieving the intent of the contract, attaining reasonable expectations of service life proportional to cost, and protection of public safety. Typically, changes in acceptance procedures will only be made to work outside the vertical limits of the traveled way. Consideration should be given to the consequences of subsequent failure, ease of replacement, whether or not there is a high variability in the quality of similar work, or any other pertinent facts. Actions taken in accepting such materials should be identified in the project records with acknowledgment by signature of the Project Engineer. Materials accepted in accordance with this guidance should be identified in the Project Engineer's preparation of the Certification of Materials under Chapter 9-1.5 of this manual.

The use of this process is not intended to retroactively justify deficiencies discovered after the completion of work.

1-2.8B Contractor's Equipment, Personnel, and Operations

The Contractor is required to furnish adequate equipment for the intended use. The Contractor's equipment must also be maintained in good working condition. Prior to the start of work, the Project Engineer should ensure, by inspection, that the Contractor's plant, equipment, and tools comply with the specifications.

Whenever the specifications contain specific equipment requirements, the Project Engineer should verify that the equipment provided meets these specifications. This should

be documented in project records such as the Inspector's Daily Report. The Contractor is required to furnish, upon request, any manuals, data, or specialized tools necessary to check the equipment.

It is most important that the operation of automatically controlled equipment be checked carefully and that the Contractor be advised immediately whenever the equipment is not performing properly.

The Contractor's supervisory personnel must be experienced, and able to properly execute the work at hand. If, in the Project Engineer's opinion, the Contractor's supervisory personnel are not fully competent, the Project Engineer should immediately notify the Regional Construction Manager of the facts in the matter, seeking assistance and advice.

It is expected that, consistent with WSDOT's policies and delegated authority, the Project Engineer will assist the Contractor in every way possible to accomplish the work under the contract. However, the Project Engineer must not undertake, in any way, to direct the method or manner of performing the work. Should the Contractor select a method of operation that results in substandard quality of work, non-specification reults, a rate of progress insufficient to meet the contract schedule, or that otherwise violates the contract specifications or provisions, the Contractor should be ordered to discontinue that method or make changes in order to comply with the contract requirements. Where cooperation cannot be achieved, the Project Engineer should notify the Regional Construction Manager of the facts in the matter, seeking assistance and advice.

1-2.8C Defective or Unauthorized Materials or Work

Contract Final Acceptance for all work completed on a project is made solely by the Secretary of Transportation. However, the Secretary relies heavily on the actions and professional opinions of others, involved throughout the course of work, in determining acceptability. Because of this, it is expected that the Project Engineer, working with the assistance of the Regional Construction Manager, as well as making full use of the many resources available at both the Regional level and the Olympia Service Center, particularly the office of the State Construction Engineer, will ensure that sufficient inspection is conducted in order to determine that the work performed or the materials utilized to construct the project comply with the requirements included in the contract plans and specifications. When inspections or tests are performed that indicate substandard work or materials, the Project Engineer should immediately notify the Contractor, rejecting the unsatisfactory work or material. When a review of the Contractor's work or materials used indicate questionable acceptability with regard to the specifications, the Contractor should be notified as quickly as possible so that changes in materials or work methods can be made in order to avoid materials or work being rejected.

1-2.8C(1) Defective Materials

The contract plans and specifications for construction of a project require that specific materials and/or work practices be utilized in completing the work. The Project Engineer may reject any materials not conforming to the requirements of the specifications. The rejected materials, whether in place or not, are to be immediately removed from the site of the work unless the following guidelines for acceptance of non-specification materials are followed:

Material Not In Place

1. Nonconforming aggregate materials that are within the defined tolerance limits noted in Chapter 9-5.6 of this manual may be accepted for use on the project in accordance with the guidance in Chapter 9-5.4(B).

2. There may be situations where WSDOT could obtain significant benefit from the use of nonconforming aggregate materials. This requires prior concurrence of the State Construction Engineer and a change order modifying the project specifications.

Except for 1 and 2 above, materials that are known in advance as failing to comply with the Specifications are not to be incorporated into the work.

Material In Place

1. Price adjustments have been developed and are referenced in the contract for acceptance of certain materials whose properties cannot be determined until they are in place. Items this policy applies to include: concrete compressive strength, Portland cement concrete pavement thickness, asphalt concrete gradation, oil content, density, and pavement smoothness.

2. Material incorporated into the work that is subsequently found to be in nonconformance with the specifications and for which price adjustments for acceptance are not included in the contract, must be reviewed to determine acceptability. The determination of acceptability should be made only when, in the Project Engineer's judgment, there is a possible service or benefit to be obtained from its use. If it is determined that no benefit or service is obtained from the material's use, the Project Engineer may direct that the material be immediately removed and replaced at no cost to WSDOT.

The Project Engineer may consult the Materials Laboratory, the Bridge and Structures Office, or other design organizations for assistance in determining the usefulness of the nonconforming material. If consulted, these offices will offer technical advice to the extent that information is available. It is not intended to enter into extensive research to assess material which could be removed and replaced under the contract terms.

If the material is to be accepted for continued use, a determination of possible reduced service and the resulting credit to be assessed by change order, should be completed by the Project Engineer. This determination must meet with the Regional Operations/Construction Engineer's approval for execution of the change order. In addition, prior review and

concurrence must be obtained from the State Construction Engineer for the intended application of the material and the Materials Engineer for concurrence with issues of material performance. With this determination for acceptance of non-specification material, discussions should be initiated with the Contractor and a final change order completed.

If it is determined that the specification violation will not compromise the performance of the material and the nature of the violation is considered to be more of a technical infraction of the specification, the material may be accepted with a change order, possibly including a price reduction. If there is sufficient data and if the nature of the material makes anlaysis feasible, the Materials Laboratory will determine a pay factor using QC/QA methods similar to those described in the Standard Specifications, Section 1-06.2(2). If Qc/QA can not be applied, the Project Engineer may determine an adjustment subjectively, using whatever information is available. This assessment or price adjustment may vary from a portion of the material costs up to the total contract unit bid price for the bid item involved. If it is determined that the violation is serious enough that the material can not be accepted for use on the project, the Project Engineer may direct its complete removal and replacement at no cost to WSDOT.

All change orders for acceptance of nonconforming materials are Contractor-proposed and WSDOT is under no obligation to accept or approve any of them.

1-2.8C(2) Defective or Unauthorized Work

The following types of activities will be considered unauthorized work and will be completed solely at the risk and expense of the Contractor:

- Work performed contrary to, or regardless of, the instructions of the Project Engineer.
- Work and materials that do not conform to the contract requirements.
- Work done beyond the lines and grades set by the plans or the Engineer.
- Any deviation made from the plans and specifications without written authority of the Project Engineer.

Until all issues of material acceptance and conformity to the contract plans and specifications can be resolved, unauthorized work will not be measured and paid for by WSDOT. The Project Engineer may direct that all unauthorized or defective work be immediately remedied, removed, replaced, or disposed of. In correcting unauthorized or defective work, the Contractor will be responsible to bear all costs in order to comply with the Engineer's order.

For additional guidance, see Section 1-05.7 of the *Standard Specifications*. If the Contractor fails or refuses to carry out the orders of the Engineer or to perform work in accordance with the contract requirements, the Project Engineer should immediately notify the Regional Construction Manager of the facts in the matter, seeking assistance and advice.

1-2.8C(3) Material Acceptance by Manufacturer's Certificate

All material is to be accepted for use on the project based on satisfactory test results that demonstrate compliance with the contract plans and specifications. All work demonstrating compliance is to be completed prior to the material's incorporation into the work. In many cases, this testing has already been completed in advance by the manufacturer. A Manufacturer's Certificate of Compliance is a means to utilize this work in lieu of job testing performed prior to each use of the product. While this provides for a timely use of the material upon arrival to the job site without having delay in waiting for the return of test results, it creates potential difficulties in obtaining and assessing the adequacy of a certificate.

Section 1-06.3 of the *Standard Specifications* describes the procedures for acceptance of materials based upon the Manufacturer's Certificate of Compliance. Division 9 of the *Standard Specifications* describes those materials that may be accepted on the basis of these certificates. Since a certificate is a substitute for prior testing, it is intended that all certificates be furnished to the Project Engineer prior to use or installation of the material.

However, there are some circumstances where the Contractor may request, in writing, the Project Engineer's approval to install materials prior to receipt and submittal of the required certificate. The Project Engineer's approval of this request must be conditioned upon withholding payment for the entire item of work until an acceptable Manufacturer's Certificate of Compliance is received. Examples of materials that *shall not* be approved by the Project Engineer for installation prior to the Contractor's submittal of an acceptable certificate are: materials encased in concrete (i.e., rebar, bridge drains, etc.); materials under succeeding items where the later work cannot be reasonably removed (i.e., culvert under a ramp to be opened to traffic); etc. The Project Engineer's approval or denial shall be in writing to the Contractor, stating the circumstances that determined the decision.

At the conclusion of the contract, there may still be some items that are lacking the required certificates. These items must be assessed as to their usefulness for the installation, prior to payment of the Final Estimate and subsequent Materials Certification of the contract. The review of these items may include:

- Comparison with the suitability of other shipments to the project or other current projects.
- If possible, sampling and testing of the items involved or residual material from the particular lot or shipment.
- Independent inspection on site of the completed installation.

If it is determined that the uncertified material is not usable or is inappropriate for the completed work that incorporates the material, the Contractor should be directed to immediately remove the material, replacing it with other certified materials. If the material is found to be usable and is not detrimental to the installation it was incorporated into, it

may be left in place but with a reduction to no pay. The reduction in pay will be the entire cost of the work (i.e., unit contract price, portion of lump sum, etc.) rather than only the material cost. The Contractor should continue to have the option of removing and replacing the uncertified material in order to regain contract payment for the installation.

1-2.8D Contractor Submittals

Missing submittals is a principal source of delays in closing out the project and processing the final estimate. As the project proceeds toward completion, the Project Engineer and the Contractor should attempt to obtain all submittals as the need arises. These might include such things as materials certificates, certified payrolls, extension of time requests, or any other item or document that might delay processing the final estimate. Attention is needed to assure the receipt of these items from subcontractors as they complete their work.

1-2.8E Statement of Materials and Labor, Form FHWA-47

This report is required for all projects over $1,000,000 on the NHS, excluding Force Account, Beautification, and Railroad Protective Devices. When this report is required, it is to be prepared in accordance with the requirements and instructions contained on the form and in the "Required Contract Provisions Federal-aid Construction Contracts", Form 1273, the "pink" sheets that are included in every federal-aid project.

When this report is a requirement of the contract, the Project Engineer will obtain it from the Contractor, complete Section A, and submit it directly to the Olympia FHWA office at MS: 0943. A copy of this report shall be submitted with the Final Estimate to the OSC Construction Office.

It is mandatory that the materials be reported in the units shown, i.e., tonnes, meters, etc. Materials not listed on the report form need not be reported.

1-2.8F Contractor's Performance Reports

The procedures for completing and submitting the Prime Contractor Performance Report are included with the report, Form 421-010, and the Prime Contractors Performance Report Manual, M 41-40. The requirement for this report and other direction can also be found in WAC 468-16-150 and WAC 468-16-160.

Should the Contractor's typical performance on a contract become below standard, the Project Engineer should immediately notify the Regional Construction Manager of the facts in the matter, seeking assistance and advice.

1-3 Estimates and Records

1-3.1 Estimates

1-3.1A General

Payment for work performed by the Contractor and for materials on hand must be made in accordance with Section 1-09 of the *Standard Specifications*. To facilitate payments to the Contractor and ensure proper documentation, WSDOT utilizes an automated computer system to record project progress in terms of bid item quantity accomplishment. This is then used to pay the Contractor for actual work performed during each designated pay period or for materials on hand. The automated system that completes this task is called the Contract Administration and Payment System (CAPS). CAPS utilizes an electronic tie between each project office's computer system and the mainframe computer. This system provides access to a large volume of corporate data and facilitates the maintenance of this data by different groups in different locations. Some of these different activities include:

- Contract Initiation — An Olympia Service Center action whereby new contracts are created and stored in a computer file. The information consists of the names of the Contractor and the Project Engineer, project descriptive data, accounting identifier numbers, preliminary estimate, proposal date, bid opening date, award date, execution date, accounting groups and distributions, and an electronic ledger.
- Project Ledger — An updating process by the Project Office which keeps track of work performed on the contract as it is completed.
- Estimate Payments — A Project Office action whereby progress estimates and Regional final estimates are processed directly from the Project Office. The Olympia Service Center Final Estimate process activates the Region Final when all the required paperwork is in place. Supplemental final estimates are processed by the Olympia Service Center only. Complete instructions for use of the CAPS computer system are included in the manual titled *Contract Administration and Payment System* (M 13-01).

1-3.1B Progress Estimates

Progress estimates are normally processed on the 5th of the month for odd-numbered contracts and on the 20th of the month for even-numbered contracts. Where the Project Engineer deems it appropriate, estimates may also be run on other dates.

Estimates may also be run on other dates if the progress estimate or parts of the progress estimate were withheld to encourage compliance with some provision of the contract and the Contractor resolves the issue that caused the withholding. Tese estimates should be paid immediately upon resolution by the Contractor.

Within the CAPS system, the basis for making any estimate payment is information from the project ledger. Every entry in the ledger is marked by the computer as either paid, deferred, or eligible for payment. Before an estimate can be paid, a Ledger Pre-Estimate Report (RAKD300C-PE) must be produced. In constructing this report, the CAPS system gathers all the ledger entries that are identified as eligible for payment, prints them on the report summarized by item, and shows the total amount completed to date for that item but not yet paid for by progress estimate. The report also

shows any deferred entries or exceptions if they exist and includes a signature block for the Project Engineer's approval.

If there are errors or omissions in this report, the ledger must be changed to reflect the correct data. After corrections are made, the Ledger Pre-Estimate Report must be run again in order to get the corrections into the report and made available for payment by progress estimate. Once the Ledger Pre-Estimate Report is correct, an actual estimate can be paid. The report containing the Project Engineer's signature should be retained in the project files.

The estimate process is then accomplished with a few key strokes in option 2, estimate payments, in the CAPS main menu. At this point, the CAPS system will automatically calculate mobilization, retainage, and the sales tax. The warrant will be produced, signed, and sent to the Contractor along with the Contract Estimate Payment Advice Report and two different sales tax summary reports. Copies of these reports will also be sent to the Project Office. When the Project Office receives their copy of the Contract Estimate Payment Advice Report, the total amount paid for contract items should be checked against the Pre-Estimate Report. This helps to verify that the amount paid was what the Project Engineer intended to pay. In addition, theledger records that produced the estimate will now be marked by the CAPS system as being paid.

Up to the point of actually producing the warrant, the entire process for making a progress estimate payment is initiated and controlled by the Project Office.

Particular attention should be given to the comparison of the plan quantities and the estimate quantities for the various groups on the project as shown on the Ledger Pre-Estimate Report. Overpayments on intermediate progress estimates are sometimes difficult to resolve with the Contractor at the conclusion of the project.

New groups which do not change the termini of the original contract or changes in groups should be accomplished by memorandum from the Region to the Olympia Service Center Accounting Office.

An additional estimate may be prepared if considerable work has been done between the date of the last progress estimate and the date of physical completion when the Engineer anticipates delays in preparing the final estimate. Should this circumstance occur, the additional estimate should show the work done to date no later than the day before the date of physical completion.

1-3.1B(1) Payment for Material on Hand

Payment for material on hand may only be considered for materials that will be incorporated into the permanent work. Payment amounts for material on hand must not exceed the bid item amount. In processing payment for materials on hand, the CAPS system utilizes the 900 series of item numbers for ledger entries. The requirements for payment of Materials on Hand are noted in Section 1-09.8 of the *Standard Specifications*. Payments can be made provided that the Contractor submits documentation of the amounts requested, that the materials are found to have met the requirements outlined in the plans and specifications, and the materials are delivered to or stockpiled near the project site or other storage sites that may be approved by the Project Engineer.

All materials, for which requests for payment are made, must be stored under the Contractor's control. The Contractor must agree that the material will not be diverted to other work. Materials should be segregated, bundled and tagged, or otherwise marked or identified for use on a specific contract or project. All materials paid for as Materials on Hand must be kept in a manner that is readily available for inspection and periodic identification by WSDOT.

Where the items are fabricated and stored in areas outside the Region, then the Region may make arrangements with other Regions or the OSC Materials Laboratory for inspection deemed necessary prior to paying for the items as Material on Hand.

Payments may also be made for materials stockpiled at a materials fabricator or for completed portions of fabricated items. The Project Engineer may establish the most expedient method of payment for fabricated materials on hand in accordance with the requirements of Section 1-09.8.

When materials, for which on-Hand payments have been made, are incorporated into the work, the MOH payments must be deducted. It is the responsibility of the Project Engineer to devise procedures that assure this is done correctly.

When contracts are estimated to cost more than $2 million and require more than 120 working days to complete, a General Special Provision (GSP) will be included in the contract provisions, providing a different procedure for handling payments and deductions for Material on Hand. When this GSP is included in the contract provisions, the following procedure is used to determine how much of the MOH payment should be deducted from an estimate:

- Each month, no later than the estiate due date, the Contractor will submit a letter to the Project Engineer that clearly states:
    - The amount originally paid on the invoice (or other record of production cost) for the items or Material on Hand,
    - The dollar amount of the previously paid Materials on Hand incorporated into each of the various work items for the month, and
    - The amount that should continue to be retained in material on hand items.

  If work is performed on the items and the Contractor does not submit a letter, all of the previous material on hand payment may be deducted on the next available progress estimate.

1-3.1B(2) Payment for Falsework

On those projects which include a lump sum item for bridge superstructure, payment may be made on request by the Contractor for falsework as a prorated percentage of the lump sum item as the work is accomplished. The Project

Engineer may require the Contractor to furnish a breakdown of the costs to substantiate falsework costs. For any given payment request, the Contractor may be required to furnish invoices for materials used and substantiation for equipment and labor costs.

1-3.1B(3) Payment for Shoring or Extra Excavation

When Shoring or Extra Excavation Class A is included as a bid item, payment must be made as the work under the bid item is accomplished, the same as for any other lump sum bid item. When Shoring or Extra Excavation Class B is included as a bid item, measurement and payment shall be made in accordance with Sections 2-09.4 and 2-09.5 of the *Standard Specifications*. RCW 39.04 provides that the costs of trench safety systems shall not be considered as incidental to any other contract item, and any attempt to include the trench safety systems as an incidental cost is prohibited. Accordingly, when no bid item is provided for either Shoring or Extra Excavation Class A or Shoring or Extra Excavation Class B and the Engineer deems that work to be necessary, payment will be made in accordance with Section 1-04.4 of the *Standard Specifications*.

1-3.1B(4) Payment for Surplus Processed Material

When excess aggregate is produced by the Contractor from a WSDOT furnished source, the Contractor will be reimbursed actual production costs if the excess materials meet the requirements of Section 1-09.10 of the *Standard Specifications*. If more than one type of aggregate is involved, the provisions of Section 1-09.10 apply to each type.

If WSDOT has a need for the excess aggregate for either maintenance or future construction contracts, the material may be purchased into the appropriate inventory account. The Project Engineer should contact Region Maintenance and Accounting for guidance. If aggregates are to be disposed of as surplus, the Project Engineer should contact the Administrative Services Office, Purchasing and Inventory Section, for additional assistance.

1-3.1B(5) Liquidated Damages

Liquidated Damages and Direct Engineering, or other related charges, are to be addressed as described in the contract specifications, Section 1-08.9 of the *Standard Specifications*, and Chapter 1-2.5G of this manual. Direct Engineering charges are a form of Liquidated Damages and must be listed on the monthly progress estimates on the line for Liquidated Damages. Traffic related damages as described in Chapter 1-2.5G(2) of this manual are to be listed under Miscellaneous Deductions. The Project Engineer must evaluate potential Liquidated Damages that have accrued as a result of the expiration of contract time before the damages are withheld from moneys due the Contractor. The work and circumstances that have occurred over the course of the project should be reviewed to determine if there is potential entitlement for granting additional contract time. Liquidated Damages that have accrued should be adjusted for this evaluation. Liquidated Damages deemed chargeable should then be withheld from moneys due the Contractor each monthly progress estimate as Liquidated Damages accrue. While the Project Engineer takes the action to withhold damages as the work progresses, only the OSC Construction Office may actually assess those damages.

1-3.1B(6) Credits

Dollar amounts may be deducted as a “Below The Line Miscellaneous Deduction” from progress or final estimates when WSDOT is due a credit from the Contractor. Routine credits from the Contractor to WSDOT include, but are not limited to, the following items:

- Engineering labor costs when due to Contractor error or negligence, additional engineering time is required to correct a problem. This includes the costs of any necessary replacement of stakes and marks which are carelessly or willfully destroyed or damaged by the Contractor’s operation.
- Lost and/or damaged construction signs furnished to the Contractor by WSDOT. The Contractor should be given the opportunity to return the signs or replace them in kind prior to making the deductions.
- Assessment to WSDOT from a third party that is the result of the Contractor’s operations causing damage to a third party, for example, damage to a city fire plug. Actual costs will be deducted from the estimate.
- Other work by WSDOT forces or WSDOT materials when the Contractor cannot or will not repair damages that are the responsibility of the Contractor under the contract.
- Liquidated damages not associated with contract time, i.e., ramp closures, lane closures (see Chapter 1-2.5G).
- As provided for in the specifications, specific costs or credits owed WSDOT for unsuccessful contractor challenged samples and testing.

The authority to withhold and assess routine “Below The Line - Miscellaneous Deduction” on progress and final estimates has been delegated to the Regional Construction Manager, and may be further subdelegated to the Project Engineer. The Project Engineer must give written documentation to the Contractor describing the deduction and provide sufficient notice of the impending assessment.

Credit items which are specifically provided for by the *Standard Specifications* or contract provisions, such as non-specification density, non-specification materials, etc. may be taken through the contract items established for those purposes. A change order is required for credit items which are not specifically provided for by the contract provisions.

Occasionally a Contractor will send a check directly to a Project Office for payment of money due WSDOT. (The Project Office should not request payment.) Whenever a Project Office or WSDOT employee receives a check or cash directly from a Contractor, it is very important that the guidance found in Directive 13-80, Control of Cash Receipts, be followd.

1-3.1B(7) Railroad Flagging

All dollar amounts actually incurred by the Railroad Company for railroad flagging, under the terms of the typical railroad agreement, will be paid by WSDOT. The Contractor will incur no costs for railroad flagging unless the flagging is for the Contractor's benefit and convenience. In this case, the Project Engineer will deduct this cost on monthly progress estimates as a below the line item in the Contract Administration and Payment System.

1-3.1B(8) Payment for Third Party Damages

Section 1-2.4I of this manual details when WSDOT assumes responsibility and pays for third party damages. The *Risk Management Manual*, M 72-01, provides detailed guidance on procedures, including lines of communication. Payment should be made under the item "Reimbursement for Third Party Damages". This item is only intended to be used for costs that are the responsibility of the contracting agency. If this item was not included in the contract, it may be added by change order using a separate group for each Control Section in which an incident occurs. On some items such as "Repair Impact Attenuator" there has been a conscious decision by the contracting agency during design to assume a risk which is otherwise the contractor's. It would not be appropriate to assume this risk for other items of work by adding a similar pay item through a change order.

The next step is for the Project Engineer to determine if an incident warrants an attempt to recover costs based on cost effectiveness. If so, a memo is necessary to provide notice and information to the risk management office. Basically, they need the information necessary to investigate the incident, find the responsible party, determine the amount of the damages and obtain reimbursement for the State. The risk management office needs the following information:

- Contract Number, Project Description
- Names of Witnesses
- Documentation Related to the Damage
  - Change Order Number
  - Field Notes
  - Police Reports
  - Work Order Coding
- Summary of Repair Costs

1-3.1B(9) Withholding of Payments

Withholding payments for work the Contractor has performed and completed in accordance with the contract should not be done casually. There must be clear contract language supporting the action. The authority to withhold progress payments is subdelegated to the Regions. Further delegation to the Project Engineers is at the discretion of each Region.

No Payment for the Work

Standard Specification 1-06.3, "Manufacturer's Certificate of Compliance" is unique in that this is a situation, specified as part of the contract, where the contractor may assume the risk for no certificate and end up never being paid for the related work.

Progress Payment Deferral

In the following situations the contract specifies that the contracting agency has the authority to defer the entire progress payment:

- The contracting agency may not make any payments until all contractors have submitted a Stateent of Intent to Pay Prevailing Wages approved by Labor and Industries (RCW 39.12.040)
- The contractor fails to submit a progress schedule that meets the requirements of the contract (*Standard Specification* 1-08.3)
- Failure to submit the "*required reports*" by their due dates (*Standard Specification* 1-07.11(10)B)

Wage Administration in General

The administration of wages and payment for the work are separate issues. Holding a force account payment for certified payrolls is not appropriate. Withholding payments on the contract is suggested a as method to achieve compliance under the *Standard Specifications* pertaining to wages (1-07.9(1)). This remedy should not be used without review by of the Construction Office. Routine enforcement of wage requirements should be done on their own merits and utilize the sanctions specified as follows:

State Wage Administration

Labor and Industries is the enforcement agency for state prevailing wage administration. The State (WSDOT) is protected under the contract from wage claims by reserving 5 percent of the moneys earned as retained percentage. This 5 percent is made available for unpaid or underpaid wages liens among other claims. Contract payments should not be deferred due to a contractor's failure to pay the State minimum prevailing wage.

Federal Wage Administration

FHWA 1273 specifies that the State Highway Administration (SHA) is in the enforcement role for federal prevailing wage administration. Under Section IV - "*Payment of Predetermined Minimum Wage*" subsection 6., "*Withholding,*" the State Highway Administration (contracting agency) is authorized to withhold an amount deemed necessary to make up any shortfalls in meeting Davis-Bacon prevailing wage requirements. It goes on to authorize the deferral of all payments, under certain conditions, until such violations have ceased. This is only for federal wage requirements and the amount "deemed necessary" must be based on the amount of the underpayment.

Application of the *Standard Specifications*

Under 1-05.1 Authority of the Engineer reads in part as follows: "If the Contractor fails to respond promptly to the requirements of the contract or orders from the Engineer:…. 2. The Contracting Agency will not be obligated to pay the Contractor, and …….."

Under Section 1-09.9 Payments reads in part as follows: "Failure to perform any of the obligations under the contract by the Contractor may be decreed by the Contracting Agency to be adequate reason for withholding any payments until compliance is achieved".

Sounds good and we can do so, but withholding of payments owed the contractor must not be done on an arbitrary basis. Other than the previously noted exceptions, money is normally withheld because work/work methods are not in accordance with contract specifications. Also, the amount withheld must have a logical basis. We can not penalize the contractor by withholding more than the out of compliance work is worth.

Withholding payments should not be used routinely as a tool for forcing compliance on general contract administration requirements. The State is protected against nonperformance by requiring a performance bond. In the event that lack of contract compliance puts the State at substantial risk monetarily or safety-wise, it may be appropriate to inform the contractor of the compliance problem and suspend work under *Standard Specification* 1-05.1 "*Authority of the Engineer*" until corrections are made.

When withholding money, remember that delaying the contractor's cash flow may damage the contractor's ability to perform work. Before doing so, the State should be able to demonstrate:

- specifically what was not in accordance with the contract and where the requirement is specified in the documents
- that the amount withheld is commensurate with the amount of the unauthorized or defective work
- that the contractor was notified in a timely manner (within 8 days per prompt pay laws) and given a chance to make corrections
- that the State has worked with the contractor to mitigate corrections to non-specification work in order to minimize the cost

The State is required to pay the contractor in a prompt manner within 10 days of the cutoff for a monthly pay estimate for all work performed in accordance with the contract during that period.

1-3.1C Final Estimates — Regions

The final estimate for a project is processed in the same manner as a routine monthly progress estimate. The *Work Done To Date* entry on a final estimate is the physical completion date. When the Region final estimate is completed and is run in CAPS at the Region, it will not generate a warrant for the Contractor. Instead, the Region final estimate will produce several reports: a final Comparison of Quantities; the Contract Estimate Payment Advice; the Contract Estimate Payment Total; and the Sales Tax Summary.

These reports should be carefully checked to verify the accuracy of items, quantities posted, and the costs that have accumulated through various progress estimates during the life of the contract. Where necessary, corrections can be made to the ledger and the Region final estimate rerun as many times as it takes to make it correct before proceeding with the final estimate process.

If the final estimate shows an overpayment has been made to the Contractor, the estimate should still be processed in the same manner as a normal final estimate. If this occurs, the Contract Estimate Payment Totals report will show a minus amount due the Contractor. When the OSC Accounting Office receives the accepted final estimate package, that office will request any reimbursement due from the Contractor. The Project Engineer should not request reimbursement from the Contractor.

Once the Project Engineer has validated the final estimate amounts, a copy of the Comparison of Quantities Report, the Contract Estimate Payment Advice Report, and the Contract Estimate Payment Totals Report should be forwarded to the Contractor along with the Final Contract Voucher Certification. The Project Engineer might remind the Contractor that the person signing the Final Contact Voucher Certification must be authorized to do so. Authorized signatures are submitted by the contractor at the beginning of each contract.

Once the project has been physically completed, the final estimate package described above should be submitted to the Contractor for signature as soon as is reasonably possible. The final estimate package and request for the Contractor's signature should be transmitted to the Contractor formally. The effort to prepare the final estimate package will vary in nature and magnitude, depending on the project. In some cases, this work will conflict with field work on other projects. It is expected that final estimate preparation will e scheduled and accomplished during the six-month period after physical completion.

Once the signatures and all necessary documents have been obtained, the final estimate package should be assembled by the Region and submitted to the OSC Construction Office. If any needed recommendations for assessment of liquidated damages associated with contract time have not already been submitted, this submittal should include them. The OSC Construction Office must resolve all issues of liquidated damages before the final estimate can be accepted and submitted to the OSC Accounting Office.

1-3.1D Final Estimates — Olympia Service Center

The final estimate package submitted to the Olympia Service Center Construction Office consists of the following:

- Project Status Report — The Project Status Report should address contract time and recommendations for liquidated damages related to contract time, amount

of railroad flagging used if any, Miscellaneous Deductions identified, etc. In addition, the report should indicate whether or not all Affidavits of Wages Paid have been received for the Contractor, and all subcontractors, agents or lower tier subcontractors.

- Final Contract Voucher Certification — Form 134-146, original only.
- If an assessment of liquidated damages has been made previously, include a copy of the letter from the State Construction Engineer to the Contractor assessing these.
- If an assessment of miscellaneous damages or liquidated damages resulting from causes other than time, include copies of letters from the Region to the Contractor for assessment of these.
- Contract Estimate Payment Totals — RAKC300F-EA.
- Copy of Form FHWA 47 (NHS Federal-Aid projects over $1 Million).

The final estimate package is reviewed by the Construction Office and submitted to the State Construction Engineer for acceptance of the contract. The date on which the State Construction Engineer signs the Final Contract Voucher Certification becomes the final acceptance date for the contract itself. The final estimate package is then submitted to the OSC Accounting Office.

1-3.1D(1) Final Estimate Claim Reservations

Should the Contractor indicate a claim reservation on the Final Contract Voucher Certification, it must be accompanied by all of the requirements of Section 1-09.11(2) of the *Standard Specifications* (provided these have not been met in a previous claim submittal). The Project Engineer must assure that the requirements have been met prior to submitting the final estimate package to the Construction Office. If the claim package is incomplete, return the voucher to the Contractor with notice of the missing parts.

1-3.1D(2) Unilateral Acceptance of Final Estimates

The Project Engineer cannot establish a completion date for the contract if the Contractor is unwilling or unable to submit one or more of the required documents noted in Section 1-08.5 of *Standard Specifications*. However, the Region can request that the State Construction Engineer accept the contract by signing the Final Contract Voucher Certification (FCVC) in spite of te missing documents. The date of the State Construction Engineer's signature of the FCVC becomes both the acceptance date and the completion date of the contract, both established unilaterally.

If the Contractor has not signed the FCVC, the Region can request that the State Construction Engineer accept the contract without the Contractor's signature. The Region is responsible for notifying the Contractor before such a request is made. The Construction Office will generate the certified letter notice mentioned in the *Standard Specifications*, Section 1-09.9. The date of the State Construction Engineer's signature of the FCVC becomes both the acceptance date and the completion date of the contract, both established unilaterally.

1-3.1E Supplemental Final Estimates

A Supplemental Final Estimate is a payment adjustment made to a contract after the Final Estimate has been processed and the project has been Accepted by the State Construction Engineer. A Supplemental Final Estimate may be necessary to correct an inadvertent over/under payment or where a claim settlement may require additional payment be made to the Contractor. In order to complete a Supplemental Final Estimate, the Project Engineer should complete and assemble the following items, routing them through the Region to the OSC Construction Office for review and further processing:

1. Assemble the backup information supporting the necessity and substantiating the cost of the changes to be made.

2. Complete any corrections or additional postings necessary in CAPS, including any postings to change order items added to CAPS for the settlement of a claim. (Please note, where additional CAPS postings are necessary after the Physical Completion date has been established, the *"Work Done To"* date in CAPS must be entered as the Physical Completion date or prior.)

3. Complete a Pre-Estimate report including the Project Engineer's signature recommending payment.

4. Complete a supplemental Final Contract Voucher Certification form reflecting the changes made and showing the new total *"Final Amount"*. The form does not require the Contractors signature.

While postings and corrections to CAPS may continue, once the Completion date has been established for a contract, CAPS will no longer allow the Project Engineer or the Region to process further payments to the Contractor. As a result, payment of the Supplemental Final Estimate will need to be completed for the Project Engineer by the OSC Accounting Office

After review, the Pre-Estimate report will be signed by the State Construction Engineer authorizing payment to proceed. Once the supplemental payment is completed, the signed and executed Pre-Estimate report will be returned to the Project Engineer where it can be maintained as a part of the project payment files and made a part of the Region Temporary Final Records.

While a new Final Contract Voucher Certification is completed as a part of the Supplemental Final Estimate, the Acceptance date will remain the same as established by the State Construction Engineer's signature on the original Final Contract Voucher Certification.

1-3.1F Retained Percentage

Retained percentage withholding is based upon RCW 60.28, which provides that:

- A sum not to exceed 5 percent of the money earned by the Contractor on estimates be retained by the Contracting Agency.

- The Contractor may submit a bond for all or any portion of the amount of funds retained by WSDOT.

  When a contract is awarded, the OSC Accounting Office or the Region Plans Office sends a package of contract documents to the Contractor. This package of contract documents also includes the necessary instructions for the Contractor to make application for a bond to replace all or any portion of the retainage. The bond form will be processed by the OSC Accounting Office without involvement from Project Engineer's Office.

  The Contractor, at any time during the life of the contract, may make a request to the Project Engineer for the release of all or any portion of the amount of funds retained. This request does not need consent of surety since the retainage bond form, for this purpose, requires their consent. The Region must forward this request by transmittal letter to the OSC Accounting Office. The Accounting Office will furnish the appropriate bond form to the Contractor for execution. The Contractor may return the executed bond form directly to the Accounting Office for final approval and signature by WSDOT.

- For projects that include landscaping, the Contractor may request that, 30 days after physical completion of all contract work other than landscaping work, WSDOT release and pay in full the amount of funds retained during the life of the contract for all work except landscaping.

  In order to initiate this release of funds, Form 421-009 should be completed by the Contractor and submitted to the Project Engineer. In signing the request, the Project Engineer will confirm that all work, except landscaping work, is in fact physically completed. For any landscaping work that may have been completed, the Project Engineer will designate the amount of landscaping moneys, if any, that have been earned to date by the contractor. In the space designated for remarks the Project Engineer will identify the landscaping or plant establishment work that remains to be completed and its approximate value. Except for landscaping work, the Project Engineer will determine if all Statements of Intent and Affidavit of Wages Paid have been received for the work that has been physically completed. WSDOT will continue to withhol 5 percent retainage of any moneys earned for landscaping work that may have been completed to date and will continue to retain 5 percent of the moneys that are to be earned for landscaping that is yet to be completed. A bond is not required.

  The completed request along with the Project Engineer's cover memo confirming receipt of Statement of Intent and Affidavit of Wages Paid for the Contractor, subcontractor, and any lower tier subcontractors who were involved in the completed work, is then forwarded to the Olympia Service Center Construction Office for approval. Once approved, the Construction office will submit the request to the Service Center Accounting Office for further processing. If no claims against the retainage for unpaid taxes, labor, or materials have been received within the designated 60 day period, the Service Center Accounting Office will release the designated retainage to the Contractor.

1-3.2 Final Records for Projects Constructed by Contract

The Project Engineer is responsible for preparing all necessary records in order to document the work performed on the contract. Detailed instructions on the records required and methods of preparing them are covered in Chapter 10 of this manual.

1-3.3 Disputes and Claims

1-3.3A Claims By the Contractor

1-3.3A(1) Disagreement, Dispute, Protest

During the course of a contract, differences of opinion may arise over decisions and plan interpretations that benefit one party at the expense of the other. It is the policy of WSDOT to pursue resolution of these differences at the earliest possible time and to fully recognize all of the contractual rights of the Contractor during the resolution process.

Disagreements, disputes and protests are the responsibility of the Project Engineer until a formal claim is filed in accordance with Section 1-09.11(2). The Project Engineer may employ a variety of techniques and procedures to pursue resolution of these issues. With the high potential for cost impact, it is strongly recommended that all disagreements be identified and tracked.

When a protest occurs during a contract, the Contractor shall pursue resolution through the Project Engineer as outlined in Section 1-04.5 of the *Standard Specifications*. The Specification contains specific requirements which, if not followed, may result in a waiver of the Contractor's claim. The Project Engineer should monitor whether the Contractor is meeting these requirements. If all of the requirements have been met, the Project Engineer shall evaluate the merits of the protest and take whatever appropriate action is needed to resolve the issue. If it appears that the Contractor has failed to meet any of the requirements set forth in 1-04.5, the Project Engineer should advise the OSC Construction Office and request guidance. Pending such guidance, the Project Engineer may continue to discuss the protest with the Contractor with the qualification that no final evaluation of the protest will be made until permission is received from the OSC Construction Office.

1-3.3A(2) Claims

If the Contractor has pursued and exhausted all the means provided in Section 1-04.5 to resolve a dispute, the Contractor may file a formal claim. A formal claim, filed in accordance with Section 1-09.11(2), is a much more structured device and demands a high level of conformance with the contract requirements. The objective is to utilize the rights that WSDOT has under the contract to identify the issues, obtain a sufficient level of information from the Contractor and limit the discussion to a defined sub-

ject matter. To accomplish this, and to maintain the Department's rights in a situation that may lead to court action and expensive lawsuits, the Project Engineer must insist on rigid conformance with the requirements of the provision. In fact, the first evaluation must not be of the claim's merit, but rather of the claim's structure and content. If the package fails the specification requirements in any way, it should be returned to the Contractor immediately with a written explanation. Conversely, if the package meets the contract requirements, then the Project Engineer must comply with the demands for WSDOT actions that are included in the same specification.

The existence of a formal claim does not diminish the responsibility of the Project Engineer to pursue resolution. The only difference is that OSC final approval of a proposed settlement is required. The change order settling a formal claim must include waiver language similar to the following:

> "The Contractor, (company name), by the signing of this change order agrees and certifies that:
>
> Upon payment of this change order in the amount of $_____, any and all claims set forth in the letter(s) to the Department of Transportation, dated _____and signed by _____of (company name) in the approximate amount of $_____, have been satisfied in full and the State of Washington is released and discharged from any such claims or extra compensation".

If the settlement is intended to close out all dispute discussions for the contract, use language similar to:

> "The Contractor, (company name), by the signing of this change order agrees and certifies that:
>
> Upon payment of this change order in the amount of $_____, any and all claims in any manner arising out of, or pertaining to, Contract No. _____, (including but not limited to those certain claims set forth in the letter(s) to the Department of Transportation, dated _____and signed by _____of (company name) in the approximate amount of $_____, have been satisfied in full and the State of Washington is released and discharged from any such claims or extra compensation in any manner arising out of Contract No. _____".

1-3.3A(3) Legal Filing

Once the Contractor has submitted a formal claim in acceptable form and the State has either denied the claim or failed to respond in the time allowed, the Contractor is free to seek judicial action by filing a lawsuit or, in some cases, demanding binding arbitration. Note that the Contractor must fully comply with the provisions of Section 1-09.11 before it can seek judicial relief. Once any legal action has been started, the Project Engineer may only continue with settlement efforts if the Attorney General's office has given specific permission to do so. Such permission may be sought through the OSC Construction Office. Settlements of claims which have resulted in a judicial filing need review and approval by the Attorney General's office and different waiver language similar to the following:

> "The Contractor, (company name), by the signing of this change order agrees and certifies that:
>
> Upon payment of this change order in the amount of $_____, any and all claims in any manner arising out of, or pertaining to, Contract No. _____, (including but not limited to those certain claims set forth in the complaint filed under Thurston County Cause No._____ (Contractor's name) vs. State of Washington), have been satisfied in full and the State of Washington is released and discharged from any such claims or extra compensation in any manner arising out of Contract No. _____".

1-3.3A(4) Final Contract Voucher Certification

In some cases, of course, the Contractor will not have been so cooperative as to participate in resolution efforts. After a protest has been disallowed, there may have been no formal claim filed and the Project Engineer really doesn't know if there is a continuing problem. The way to resolve this after the project is physically complete is to assemble the final estimate and send it to the Contractor with a Final Contract Voucher Certification (FCVC). The FCVC is the Contractor's last chance to formally file a claim. If there is no exception above the Contractor's signature on the FCVC, there is no claim. The contract will be over as soon as the State Construction Engineer accepts it. If the Contractor does not return the FCVC in a reasonable time, WSDOT may unilaterally set the completion date and process the final estimate without the Contractor's signature. Proposals to unilaterally accept a contract should be discussed with Region managers before any action is initiated.

1-3.3B Claims Against the Contractor — Damage

The Department has a claims office, now known as the Washington State Department of Transportation Risk Management Office (RMO). All receptionist job descriptions, all Region operations manuals, and all telephone training is set up to refer citizens with damage claims related to construction to the RMO and to provide the toll-free number (1-800-737-0615). The RMO will react to the call, issuing claims forms, contacting the contractor, and following up on the actions taken.

The Project Engineer's role is to appropriately advise the RMO, if needed. There may be confusion about which contract is involved. Field office knowledge about the incident and the surrounding circumstances may be solicited. The contractor's insurance and the insurance provided by the Contractor for the State may be involved and information about the policy will, most likely, be requested.

If, in spite of the Department process, the claimant contacts the field office directly, the Project Engineer should refer the claimant to the Risk Management Office (1-800-737-0615).

1-3.3C Claims Against the Contractor — Money

Claims received by the Region for money owed by the Contractor should be referred to the Contractor. A claimant should be advised of the legal right to file a lien against the retained percentage for claims involving labor, equipment, or materials used on the project and be referred to the OSC Accounting Office for obtaining the necessary lien forms.

1-3.3D Claims Against Officials and Employees

The statutes provide that claims may be filed against the State of Washington, State officers and employees, for damages resulting from their conduct and prescribes the manner in which the action must be taken. Whenever this occurs, the state will furnish the legal defense and pay any judgments if the act which caused the alleged damage was within the scope of the person's duties, was in good faith, and without negligence.

1-3.4 Stewardship

"Stewardship" is a term used in the context of Federal funding. In this context, it means "caretaker duties". Most of the processes included in this manual are, in one way or another, related to the duties of stewardship. In the simplest terms, being a steward of federal construction funds is the sum total of all the activities that WSDOT performs in construction administration. The fundamental responsibility is "I must see that the taxpayers get what they paid for". Along with the assignments of stewardship duties goes the responsibility to review and report a summary of the duties that are being or were carried out on the specific project.

Through agreement with FHWA, the responsibility to review and report on federal-aid projects has been assigned as follows:

- FHWA will be responsible for initial, intermediate, and final inspections on new construction and reconstruction projects on the Interstate.
- The OSC Construction Office will be responsible for interim and final inspections for all other projects with a contract amount over $3.5 million.
- Regions will be responsible for interim and final inspections on all projects with a contract amount less than $3.5 million.

Project inspections are intended to review monitoring and oversight activities of federal-aid projects and to assure FHWA that WSDOT is complying with the contract requirements, established WSDOT procedures, and federal-aid regulations. Final inspections will be performed on all federal-aid projects anytime after 90 percent completion, but no later than 30 days after the Physical Completion date. The scope of inspections is dependent on the size and type of the project. All change orders must be reviewed for compliance with established procedure, delegation of signature authority and federal-aid eligibility, and a statement confirming eligibility must be shown on the inspection report. Other subject areas, at the discretion of the reviewer, might include materials quality, inspection controls, traffic control, training, unusual features, schedule and time status, claims and disputes, etc.

Final Acceptance Reports must be completed on all interstate projects. These reports will be completed by FHWA for new construction and reconstruction projects and by the Construction Office for all other interstate projects, including those jobs where the Region has performed the inspections. The acceptance report summarizes the findings of inspection reports and adds information regarding materials documentation and materials participation decisions, final costs and the outcome of any actions since the time of the final inspection report.

1-4 Utility and Railroad Relocation

1-4.1 Work Performed Under Utility Agreements

Utility agreement work associated with a contract exists in two categories. The first is work done for a utility by WSDOT that is included in the contract and performed by the WSDOT contractor. The second is work done, either by the utility or the utility's contractor, that is associated with and done near the WSDOT project.

If the utility work is included in the contract, the plans will show the work and will include pay items exactly as if the work was part of the transportation improvement. The responsibility of the Project Engineer is to treat this work the same way that "normal" work is handled. There will be a necessity for communication with the utility itself, inviting comments and joint reviews and inspection of the work. In many cases, the utility will provide materials or equipment to be incorporated into the work. The utility will also provide certification that provided material meets the requirements of the contract. If problems arise and changes are considered, there are additional paperwork demands. The Project Engineer should consult with the Utility and the Region Utility Engineer.

If the work is associated with the project, or if unrelated work is being done nearby, and the utility or its contractor is performing the work, the Project Engineer should treat the neighboring work in the same manner that adjacent WSDOT work would be treated. (See *Standard Specifications*, Section 1-05.14 and Section 1-2.2H of this manual.)

1-4.2 Work Performed Under Railroad Agreements

Railroad work associated with a contract exists in three categories. The first is work done for a railroad by WSDOT that is included in the contract and performed by the WSDOT contractor. The second is work done, either by the railroad or the railroad's contractor, that is associated with and done near the WSDOT project. The third category is railroad protective services. Protective services, such as flagging, are typically provided by the railroad.

If the railroad work is included in the contract, the plans will show the work and will include pay items exactly as if the work was part of the transportation improvement. The responsibility of the Project Engineer is to treat this work

the same way that "normal" work is handled. There will be a necessity for communication with the railroad itself, inviting comments and joint reviews and inspection of the work. In many cases, the railroad wil provide materials or equipment to be incorporated into the work. The railroad will also provide certification that provided material meets the requirements of the contract. If problems arise and changes are considered, there are additional paperwork demands. The Project Engineer should consult with the Railroad Company and the Region Utility Engineer.

If the work is associated with the project, or if unrelated work is being done nearby, and the railroad or its contractor is performing the work, the Project Engineer should treat the neighboring work in the same manner that adjacent WSDOT work would be treated. (See *Standard Specifications*, Section 1-05.14 and Section 1-2.2H of this manual.)

Protective services may be called for when the Contractor is performing work on railroad facilities (first category above) or when the Contractor's work is conflicting or adjacent to a railroad facility that is not being changed. Typically, the railroad will determine the need for service, provide the protective services, and send the bill to WSDOT. There may be an agreement in place, or the railroad's actions may be unilateral. On all projects including railroad flagging, the Project Engineer will notify the Railroad Company when all work involving the railroad is physically complete.

The addition or revision of agreements with the railroad can be lengthy processes. The Project Engineer should stay alert for possible changes and the need for revisions to the agreement. When these arise, the Railroad Company and the Region Utility Engineer should be contacted early and often.

1-5 Surveying

1-5.1 Site Surveying

1-5.1A Permanent Monuments

Most permanent monuments which are in the construction zone are relocated by the establishing agency. Normally these monuments are relocated prior to beginning of construction, but if monuments are found within the construction zone, they must be preserved until they can be moved. If the urgency of construction does not allow time for the relocation of the monument, it must be properly referenced so it may be reset or relocated at a later time. When a monument is found within the construction area, the proper agency shall be notified promptly and requested to relocate the monument.

1-5.1B Property Corner Monuments and Markers

It is imperative that land plats and property corners be preserved. The 1973 Legislature enacted a Survey Recording Act, RCW 58.09, to provide a method for preserving evidence of land surveys by establishing standards and procedures for monuments and for recording surveys as a public record. When a general land office corner, plat survey corner, or property line corner exists in the construction zone, it is necessary to properly reference it and reset it after the construction work has been done. RCW 58.09.040 requires that, for all monuments that are set or reset, a record of the monument be filed on a Monumentation Map with the County Engineer in the county in which the corner exists and the original sent to the Olympia Service Center Right of Way Plans Branch. The Olympia Service Center will forward a copy to DNR for their reords.

1-5.1C Alignment Monumentation

During construction, alignment monumentation may be altered to fit field conditions. Such changes may include:

- Normally all PCs and PTs are to be monumented. Additional point on tangent (POT) monuments are necessary where line of sight is, or may in the future be obstructed by the horizontal or vertical alignment, buildings, or other barriers.
- When the right of way and the construction alignment do not coincide, the monumentation shall be such that the exact right of way as acquired can be positioned in the field. This will generally require, as a minimum, that the right of way alignment be monumented.
- When safety of the survey crew or survival of the monuments is an issue, monuments may be offset from the true alignment. An extra effort in accuracy must be made when setting offset monuments to ensure an accurate reestablishment of the true alignment. The monumentation, including monument locations, reference distances, stations, and bearings, is to be shown on the as-built plans.

1-5.2 Construction Surveying

1-5.2A Surveying Provided by the State

Unless the contract states otherwise, the Project Enineer is responsible for providing all surveying needed to locate and define the contract work. The staking done in construction surveying must assure that the work will conform to the plans and must also conform to the Contractor's approach to the work. There are numerous survey techniques that will accomplish these objectives. Prior to each phase of the work, the Project Engineer must reach agreement with the Contractor concerning the method, location, and timing of construction staking. Once this agreement is reached, it must be shared with all WSDOT, Contractor, and subcontractor personnel who place or use construction stakes.

1-5.2B Contractor Surveying

If the contract requires the Contractor to provide some or all of the construction surveying, the Project Engineer is required to provide only the primary control points staked, marked, and verified in the field and the coordinate information for the main alignment points in the plans. The plan alignment and the field control points must be referenced to the same grid coordinate system.

The provisions for contractor surveying are intended to provide the stakes needed to inspect the work, as well as the primary function of locating and defining the work. If the survey stakes required by the contract do not provide the reference data needed for inspection, then the Project

Engineer will have to provide additional survey work that is needed. As an alternative, a change could be negotiated with the Contractor to perform the added work.

The Contractor's survey work is a contract item, just like all other contract items. It must be inspected for adequacy and conformance with the contract. Once it is performed and inspected, it must be paid for.

The wise Project Engineer will inspect the survey efforts and check as much of the contractor's work as is practical. Any errors should be brought to the Contractor's attention for corrective action. The inclusion of contractor surveying in a project transfers the risk of survey errors to the Contractor. The Project Enginer must assure that the survey work of the Contracting Agency does not relieve the Contractor of that risk.

1-6 Inspection of Course Thicknesses

Tabulated below are the permissible deviations in measured thickness for specified depths of surfacing and paving. While these are the maximum deviations that can be allowed, the Project Engineer may impose tighter requirements for conforming to the plan dimensions where there is a reason to do so.

English

Material	Specified Depth	Max. Allowable Deviation at Any One Point	Average Depth Deviation for Entire Project
Untreated Surfacing and ATB	0 – 0.25′	-0.05′	-0.025′
	0.26 – 0.50′	-0.06′	-0.03′
	0.51 – 0.75′	-0.07′	-0.035′
	0.76 – 1.0′	-0.08′	-0.04′
	Over 1.0′	-8%	-4%
Asphalt Concrete (single-lift)	0.08 – 0.15′	-0.045′	-0.015′
(multi-lift)	0.00 – 0.25′	-0.03′	-0.01′
	0.26 – 0.50′	-0.045′	-0.015′
	0.51 – 0.75′	-0.06′	-0.02′
	Over 0.75′	-0.075′	-0.025′

Metric

Material	Specified Depth	Max. Allowable Deviation at Any One Point	Average Depth Deviation for Entire Project
Untreated Surfacing and ATB	0 – 76 mm	-15 mm	-8 mm
	77 – 152 mm	-18 mm	-9 mm
	153 – 228 mm	-21 mm	-11 mm
	229 – 300 mm	-24 mm	-12 mm
	Over 300 mm	-8%	-4%
Asphalt Concrete (single-lift)	24 – 45 mm	-14 mm	-5 mm
(multi-lift)	0 – 76 mm	-9 mm	-3 mm
	77 – 152 mm	-14 mm	-5 mm
	153 – 228 mm	-18 mm	-6 mm
	Over 228 mm	-23 mm	-7 mm

For asphalt concrete overlays with a specified depth of less than 0.08 foot (24 millimeters), it will be the responsibility of the Project Engineer to ascertain the adequacy of the overlay depth in conformance to the plan.

Page

2-1 Clearing, Grubbing, and Roadside Cleanup 2-1
2-1.1 Clearing 2-1
2-1.1A General Instructions 2-1
2-1.1B Staking and Measurement 2-1
2-1.2 Grubbing 2-1
2-1.2A General Instructions 2-1
2-1.2B Staking and Measurement 2-1
2-1.3 Clearing and Grubbing — Combined 2-1
2-1.3A General Instructions 2-1
2-1.3B Measurement and Payment 2-2
2-1.4 Roadside Cleanup 2-2
2-1.4A General Instructions 2-2
2-1.4B Measurement and Payment 2-2

2-2 Removal of Structures and Obstructions 2-2
2-2.1 General Instructions 2-2
2-2.2 Measurement and Payment 2-2

2-3 Roadway Excavation and Embankment 2-2
2-3.1 Roadway Excavation 2-2
2-3.1A General Instructions 2-2
2-3.1B Staking 2-3
2-3.1C Excavation 2-3
2-3.1D Embankment Foundations 2-5
2-3.2 Embankment Construction 2-6
2-3.2A General Instructions 2-6
2-3.2B Rock Embankments 2-9
2-3.2C Earth Embankments 2-9
2-3.3 Borrow Pits 2-9
2-3.4 Temporary Water Pollution/Erosion Control 2-10
2-3.5 Measurement and Payment 2-12
2-3.5A General Instructions 2-12
2-3.5B Computer Generated Quantities 2-12
2-3.5C Use of Photogrammetry Service 2-12

		Page
2-4	**Haul**	2-12
2-4.1	General Instructions	2-12
2-4.2	Vacant	2-12
2-4.3	Haul on Borrow or Waste	2-12
2-5	**Slope Treatment**	2-13
2-5.1	General Instructions	2-13
2-5.2	Measurement and Payment	2-13
2-6	**Subgrade Preparation**	2-13
2-6.1	General Instructions	2-13
2-6.2	Measurement and Payment	2-13
2-7	**Watering**	2-13
2-7.1	General Instructions	2-13
2-7.2	Measurement and Payment	2-13
2-8	**Vacant**	2-14
2-9	**Structure Excavation**	2-14
2-9.1	General Instructions	2-14
2-9.2	Measurement and Payment	2-15
2-10	**Ditch and Channel Excavation**	2-15
2-10.1	General Instructions	2-15
2-10.2	Measurement and Payment	2-15
2-11	**Trimming and Cleanup**	2-15
2-11.1	General Instructions	2-15
2-11.2	Measurement and Payment	2-16
2-12	**Construction Geotextile**	2-16
2-12.1	General Instructions	2-16
2-12.2	Placement	2-16
2-12.3	Measurement and Payment	2-16

P65:DP/CM

2-1 Clearing, Grubbing, and Roadside Cleanup

2-1.1 Clearing

2-1.1A General Instructions

Before starting grading operations, it is necessary to prepare the work area by removing all trees, brush, buildings, and other objectionable material and obstructions that may interfere with the construction of the roadway. From the standpoint of roadside appearance and control of erosion on the right of way, it is advantageous to preserve natural growth where possible. If it is not clearly shown in the contract plans, the Project Engineer should discuss with the Landscape Architect the preservation of natural growth which will not interfere with roadway and drainage construction before starting clearing operations. Areas to be omitted from clearing or extra areas to be cleared should be determined before starting work and an accurate record made during staking operations.

2-1.1B Staking and Measurement

Clearing stakes at least 4 feet (1.2 meters) long and marked "Clearing" should be set at the proper offset marking the limits of the area to be cleared. These stakes normally should be set at 100-foot (30-meter) intervals on tangents and at shorter intervals on curves, depending on the sharpness of the curve. Where slope treatment is provided, clearing normally should be staked to a distance of 10 feet (3 meters) beyond the limits of the slope treatment with a distance of 5 feet (1.5 meters) being considered the absolute minimum distance required. Normally, grading stakes should not be set until clearing and grubbing work in a given area is completed. The method of measurement used at interchange areas should be such as to preclude the possibility of duplication or overlapping of measured areas.

When the contract provides for measuring and paying for clearing by the acre (hectare), it is the intent of the specifications to measure and pay for all areas actually cleared. Minor uncleared areas within the clearing limits may be included in the pay quantity if they are less than 50 feet (15 meters) long, measured parallel to the centerline and contain an area less than 2,500 square feet (200 square meters). No payment should be made for uncleared areas greater than the area described above.

Small, isolated areas to be cleared, located between areas excluded from measurement and which contain less than 2,500 square feet (200 square meters), shall be measured as containing 2,500 square feet (200 square). Where isolated areas occur intermittently, the sum of the areas allowed by this method of measurement shall not exceed the total area (containing the several isolated areas) when measured as continuous clearing. This condition can occur when clearing narrow strips less than 25 feet (8 meters) in width.

2-1.2 Grubbing

2-1.2A General Instructions

Grubbing provides for additional preparation of the work area by removal of remaining stumps, roots, and other obstructions which exist on or in the ground in all areas designated for grubbing. It should be noted that complete grubbing is not required under embankments where the fill height above natural ground, as measured to subgrade or embankment slope elevation, exceeds 5 feet (1.5 meters). This exception does not apply to any area where a structure must be built, subdrainage trenches are to be excavated, unsuitable material is to be removed, or where hillsides or existing embankments are to be terraced. Grubbing is important to the structural quality of the roadway and every effort should be made to obtain a thorough job. Grubbing should be completed at least 1,000 feet (300 meters) in advance of grading operations.

2-1.2B Staking and Measurement

Grubbing stakes shall be set at the limits of the slopes as specified. Where slope treatment is required, grubbing shall be extended to the limits of the slope treatment. Accurate records of grubbed areas need to be kept in the form of sketches and measurements. As with "Clearing", it is the intent to pay for all areas grubbed and to omit those areas not grubbed. Measurement will be made in accordance with the specifications and in the same manner outlined above for "Clearing".

2-1.3 Clearing and Grubbing — Combined

2-1.3A General Instructions

When clearing and grubbing is included as a combined item, it is the intent that all areas cleared must also be grubbed. The Contractor may accomplish this in one operation. Complete grubbing under fill heights in excess of 5 feet (1.5 meters) is not required unless the contract provisions specifically modify Section 2-01.3(2) of the *Standard Specifications*.

2-1.3B Measurement and Payment

Measure and Payment is identified in the *Standard Specifications* or modified in the Special Provisions.

2-1.4 Roadside Cleanup

2-1.4A General Instructions

This work consists of cleaning up, dressing, and shaping the roadside area outside the limits of construction. In advance of completion of other work on the project, the Project Engineer and the Contractor need to determine the work to be done, the equipment and labor necessary, and estimate of the cost of the work. Do not use this item for any work to be paid under "Trimming and Cleanup", or any other item.

Any trees or snags outside the limits of areas to be cleared which may endanger traffic on the roadway itself should be removed under this work. Before removing danger trees outside of the right of way, the matter should be referred to the Regional Office for negotiations with the property owners. If, however, an emergency arises, which endangers traffic, the danger trees may be removed immediately and the Project Engineer shall notify the Region as soon as possible.

The work required in shaping the ends of cuts and fills so they appear natural with the adjacent terrain will be greatly reduced if proper warping of the cut and fill slopes has been accomplished during the grading operations.

2-1.4B Measurement and Payment

Measurement and Payment is identified in the *Standard Specifications* or modified in the Special Provisions.

2-2 Removal of Structures and Obstructions

2-2.1 General Instructions

Buildings, foundations, structures, fences, and other obstructions which are on the right of way and are not designated to remain, shall be removed and disposed of in accordance with the *Standard Specifications*. All salvageable materials designated to remain the property of the Washington State Department of Transportation (WSDOT) shall be removed carefully and stored in accordance with the special provisions. Foundations shall be removed to the designated depth and basement floors shall be broken to provide drainage of water. Basements or cavities left by their removal shall be backfilled as specified, and if the areas are within the roadway prism, care shall be taken to see that the backfill is properly compacted.

When water wells or septic tanks are encountered, the project office needs to ensure they are meeting all the required environmental considerations for leaving in place or abandonment. Contacting the Regional Office for guidance is suggested. Wells having artesian characteristics will require special consideration to avoid water entrapment.

Care shall be taken to see that pavements or other objects which are to remain are not damaged during this operation.

2-2.2 Measurement and Payment

Measurement and Payment is identified in the *Standard Specifications* or modified in the Special Provisions.

2-3 Roadway Excavation and Embankment

2-3.1 Roadway Excavation

2-3.1A General Instructions

Present day earth-moving equipment and practices have accelerated grading operations to the point where the Project Engineer must make every effort to plan ahead and foresee conditions which may require changes in plans, special construction procedures, or specific coordination with subcontractors or other contractors. Delays in work progress are costly both to the Department and to the Contractor, and must be avoided whenever possible.

The Project Engineer needs to become familiar with the soil report and soil profile if they are provided and compare the preliminary soil data with the actual findings. This will allow for adjustments in the work, such as changes in haul to make best usage of better materials, changes in surfacing depth, variations in drainage, or a determination of same or changed conditions from what was expected.

The Project Engineer's Office should examine each newly exposed cut as soon as possible after it is opened in order that necessary changes may be made before excavating equipment has been moved away. This will necessitate an inspection of the cut slopes and the ditch cuts to locate any objectionable foundation materials or faulty drainage conditions which should be corrected. Objectionable materials are those having characteristics which may cause an unstable subgrade. Among the conditions the Project Engineer must watch are soil moisture contents which are so high as to render the subgrade unstable under the designed surfacing, high water table and soils where frost heaving may be serious, such as silts and very fine sands having high capillary attraction. In the event such conditions are discovered, the Project Engineer needs to contact the Regional Materials Engineer for assistance in determining corrective action to ensure a stable subgrade is achieved.

Section 2-03.3(10) of the *Standard Specifications* provides for selecting excavation material for special uses as directed by the Project Engineer. Judicious application of this provision should be made whenever the project will be benefited.

2-3.1B Staking

See Chapter 1-6 of this manual for Inspection of Course Thicknesses and listed tolerance and the *Highway Surveying Manual*.

2-3.1C Excavation

a. Roadway excavation is specified in accordance with Section 2-03.1 of the *Standard Specifications* and shall include all materials within the roadway prism, side borrow areas, and side ditches. Borrow, unsuitable excavation, ditches and channels outside the roadway section, and structure excavation are separately designated. Area designations shall not be construed to imply classification based on the type of material involved.

b. Normally, excavation will be made to the neat lines of the roadway section as indicated on the plans. When material shortages occur, additional quantities may be obtained either from borrow sources or from an enlargement of the regular cuttings as designated by the Engineer. Early determination of additional needs is desirable so that necessary enlargement can be made during the original excavation. Should it be necessary to return to a completed cut for additional material, effort should be made to cause no change in the Contractor's normal method of excavation. If the original excavation was dressed to proper slopes, it will be necessary to pay for sloping the second time in accordance with Section 2-03.3(1) of the *Standard Specifications*.

c. When there is a surplus of material which cannot be handled by changing grade or alignment, it shall be disposed of in accordance with Section 2-03.3(7) of the *Standard Specifications*. If the surplus is wasted by widening the embankments, care must be taken to avoid creating a condition conducive to embankment erosion. If possible, the widening should be made in conjunction with the original embankment and placed in accordance with Method A embankment compaction specifications. If this is not possible, it is preferable to waste along low embankments where Method A compaction can be accomplished. Dumping of loose material on high embankment slopes must be avoided.

When the foundation investigation report from the Materials Laboratory indicates settlement is anticipated in embankments at bridge ends, surplus material shall not be wasted by widening embankments or by building up the adjacent ground line near the structure. Wasting material in this manner adjacent to a structure can result in unanticipated and adverse settlement of the structure even if the structure is founded on piling.

In areas where an overload is required, any required contour grading must be done at the time the overload is constructed. When the overload is removed, the material must be removed entirely from the area and not placed on slopes or wasted in the adjacent area.

d. Wasting excavation material and borrowing may be necessary, however, such operations must be kept to an absolute minimum. Carelessness in this respect is expensive and leads to an unsightly job. Careful planning of work and proper selection and mixing of available materials often will eliminate the need to waste and borrow.

e. Where excavation is in solid rock, the excavation shall be completed full width of the roadway to a depth of 0.5 foot (150 millimeters) below subgrade. Particular attention is directed to the provisions of the specifications regarding drainage of pockets below subgrade in solid rock cuts. Pockets formed by blasting operations must be drained by ditching to the side ditches, and then backfilled with fragmentary rock, gravel, or other suitable material. Silty or clayey soils should not be used.

Most projects involving solid rock cuts will provide for controlled blasting of the faces of the rock slopes to minimize blast damage of the face and overbreak. It is the responsibility of the Engineer to decide which rock faces should be formed by controlled blasting and which ones do not require it. Usually this determination is made at the design stage, but formations may be encountered during the construction which were not anticipated during the design. The Project Engineer should advise the Regional Materials Engineer when rock excavation is in progress so that the Regional Materials Engineer may monitor the progress of the work and check to see that the slopes are suitable for the rock as revealed. The Project Engineer should also contact the Regional Operations/Construction Engineer and Materials Engineer when for any operational reason it appears desirable to change the method proposed.

It is the responsibility of the Contractor to determine the method of controlled blasting to use, but is required to drill and shoot short test sections to see that the method used is producing a satisfactory face and to develop the best methods for the particular rock formation encountered. The Engineer shall check on the results being obtained to see that they are satisfactory, and if they are not, to require the Contractor to make necessary changes in procedures to produce satisfactory results.

Most rock faces will be formed by the preshear method consisting of drilling and blasting a line of holes on the face of the cut ahead of any other blasting. The cushion blasting method consists of blasting and removing the main part of the cut prior to blasting the line of holes on the face of the cut. It is quite important that the blasting for the main part of the rock does not shatter the rock back of the face of the cut. With either method, proper hole alignment is very important. The depth of lifts of rock excavation is dependent upon the depth that the holes can be drilled and maintain proper hole alignment. A setback of about 1 foot (0.5 meter) minimum is required for each lift of rock since it is impossible to position the drill flush to the wall of the upper bench slope.

The results obtained are dependent not only on the properties of the rock but upon the hole size, spacing, amount and type of explosive, spacing of the explosive in the hole, stemming and the timing of the blast. It is desirable that the Project Engineer keep a record of these procedures used by the Contractor, especially in the early phases of the work while the best methods are being sought.

After excavating the rock cuts, the slopes shall be scaled and dressed to a safe, stable condition by removing all loose spalls and rocks not firmly keyed to the rock slope. Mechanical scaling using dozers, front end loader, etc., as the face is developed, is desirable. Any rock exposures which are felt to be a potential hazard to project personnel should be called to the attention of the Contractor. Loose spalls and rocks lying outside the slope stakes which constitute a hazard to the roadway shall be removed and payment made for their removal in accordance with Section 2-03.3(2) of the *Standard Specifications*. Controlled blasting of rock faces may be measured by running a true profile over the top of the rock at each drill hole and quantities computed using cutoff elevations established for the bottom of the drill hole.

f. Should soft areas exist in the subgrade of a completed earth cut, excavation below grade and replacement shall be accomplished in accordance with Section 2-03.3(3) of the *Standard Specifications*. Particular attention should be given to areas of transition between cut and fill. Top soil and other organic or unsuitable material should be removed from these areas and replaced with material suitable for subgrade in accordance with Section 2-03.3(14) of the *Standard Specifications*.

g. The subgrade of cut sections must be checked for density as it is required and necessary that the entire roadway subgrade meet the compaction requirements specified for the project and set forth in Section 2-03.3(14) of the *Standard Specifications*. Density tests shall be taken for each 500 feet (150 meters) or fraction for each roadway. If the density of the subgrade is less than the required density, the subgrade material shall be removed, replaced, and compacted in accordance with Section 2-03.3(3) of the *Standard Specifications*.

h. Overbreak, as defined in the *Standard Specifications*, is that portion of the material which is excavated, displaced, or loosened outside of and beyond the slopes or grade as staked or reestablished, excepting such material which occurs as slides, regardless of whether any such overbreak is due to blasting, to the inherent character of any formation encountered, or to any other cause. All overbreak so defined shall be removed by the Contractor at no expense to WSDOT, except as hereinafter described.

Overbreak, as such, should not be paid for in any manner except when the planned roadway excavation is not sufficient to complete the embankment and borrow excavation has not been included in the proposal. With the approval of the Engineer, overbreak material may then be used to complete the embankment and payment made at the unit contract prices for Roadway Excavation and Haul.

When approved by the Engineer, available overbreak material may be used in accordance with Section 2-03.3(12) of the *Standard Specifications*.

In the event that conditions causing the overbreak justify reestablishing the slopes to include part or all of the overbreak section, the material reverts to roadway excavation material and shall be so paid for. Justifiable reason for reestablishing the slopes may be uncontrollable overbreak resulting from the existence of natural cleavage or faults in rock formations, planned slopes resulting in an unsafe and unstable condition, or other such reason. Overbreak may be expected on unstable slope projects involving rock cuts if the reason for the project is the rock cut is unstable. When a question occurs as to justification for reestablishing slopes because of overbreak, the Project Engineer shall consult with the Regional Construction Engineer.

When overbreak is surplus material and reestablishment of slopes is not justified, the materials shall be removed and wasted as provided for “Surplus Materials” under Section 2-03.3(7) of the *Standard Specifications* except that the work shall be at the Contractor’s expense, including the cost of hauling and wasting.

Where pay quantities of material are wasted and overbreak is used in lieu thereof, no allowance will be made for such overbreak. Haul in this case will be paid upon the basis of the pay quantities of excavation.

i. The Project Engineer’s attention is directed to Section 2-03.3(11) of the *Standard Specifications*, providing for the removal of slides in cut slopes and in embankment slopes. Any slides coming into the roadway after the slopes have been finished by the Contractor shall be removed by the

Contractor at the unit contract price per cubic yard (cubic meter) for the excavation involved. If the Project Engineer orders the slope to be refinished, payment for refinishing would be eligible for an equitable adjustment as defined in Section 1-09.4 of the *Standard Specifications*.

In case of slides in embankment slopes, the Contractor shall replace the embankment material from sources designated by the Project Engineer at the unit contract prices for the excavation involved.

In the event the slide repair is such that quantities cannot be measured accurately, or if the Contractor must use a different type of equipment for removal than that available on the project, payment may be made as provided in Section 1-09.4 of the *Standard Specifications*.

j. The Project Engineer's attention is directed to Section 1-07.14 of the *Standard Specifications*, providing for the Contractor's responsibility for sloughing and erosion of cut and embankment slopes. The ordinary sloughing and erosion of cut and embankment slopes shall not be considered as slides, and the Contractor is responsible for providing temporary control facilities to prevent this.

The following guidelines are provided to assist in determining responsibility for repairs to eroded areas:

1. Slides

   Slide repair costs will be borne by WSDOT, where there is no evidence of neglect by the Contractor.

2. Erosion of Slopes

   A. In places where water has run over the edge of the roadway and where the Contractor has neglected to provide adequate protection, the Contractor must assume the costs of repair.

   B. Where rain on cut and embankment slopes cause rivulets and wash, the Contractor must assume the cost of repairs except as noted hereinafter.

   C. Where erosion of cut or embankment slopes occur from ground water seepage, WSDOT must assume the cost of repairs.

3. Repairs

   A. In 2 B above, the Contractor must, at no expense to WSDOT, remove eroded material from the toe of slope, ditches, and culverts and restore the eroded areas with this material where practicable. If additional top and/or embankment material is needed or different materials are ordered by the Engineer, it will be furnished and placed by the Contractor at unit contract prices.

   B. In 2 A and 2 B where erosion has occurred and repairs are the Contractor's responsibility, the Contractor must restore the area at no expense to WSDOT, including the seeding, mulching and fertilizing.

   C. In 1 and 2 C where seeding, mulching, and fertilizing have been damaged, payment will be made for restoring same at the unit contract price for seeding, mulching and fertilizing.

2-3.1D Embankment Foundations

a. The natural ground upon which an embankment is to be constructed may be such that it will impair the stability of the completed roadway. Such conditions must be corrected prior to starting embankment construction. Unsuitable ground such as peat, soft organic clay, and silts must be removed or otherwise stabilized to prevent unequal or excessive roadway settlement or embankment failure. Areas requiring special foundation treatment will be shown in the plans and/or specified in the special provisions with the exception that possible detrimental soil at the transition between cut and fill and under shallow embankments may not be indicated. Particular attention should be given to these areas and in the event that highly compressible or unstable top soil or other undesirable material exists, it should be removed in accordance with Section 2-03.3(14) of the *Standard Specifications*.

In the event that other unsuitable foundation material exists and is not indicated in the contract and is beyond the limits as described in Section 2-03.3(14), the Olympia Service Center Construction Office should be contacted through the Region for assistance in reaching a resolution.

Where embankments are built on hillsides or existing embankment slopes, the existing surface soil may form a plane of weakness, unless the slope is terraced or stepped by plowing deeply to key the new embankment to the slope. Keying the embankment to the slope is also important when constructing an embankment across a rather steep draw. This operation is a standard requirement for embankment construction as specified in Section 2-03.3(14) of the *Standard Specifications*.

b. Where specified in the contract plans and/or the special provisions, unsuitable foundation materials shall be removed or otherwise stabilized as required. When removal is required, inspection should determine that the removal is complete to solid foundation. Where water exists in the excavation areas, it should be drained, if possible, by ditching so that excavation and backfilling can be accomplished in the dry. Where backfilling must be done under water, granular material should be used, and special care must be taken to avoid trapping unsuitable material in the backfilled area.

c. Removal of unsuitable foundation material by displacement with or without the use of explosives should be attempted only where specified, or where recommended by the Olympia Service Center Materials Engineer and approved by the OSC Construction Office.

d. Embankment settlement can be accelerated by the use of overloads, vertical sand drains, or by vacuum pumping to lower the water table. These treatments should not be attempted unless specified by the contract provisions or recommended by the OSC Materials Engineer and approved by the OSC Construction Office.

e. Settlement indicating devices are occasionally called for on the contract plan and special provisions when it becomes necessary to determine the extent and rate of embankment settlement. Settlement data is necessary for establishing construction schedules for adjoining or adjacent structures where the downward movement of the embankment and its foundation will influence the stability of the structure.

There are several types of settlement indicating devices in current use. The principals of each type and the instructions for installation and monitoring must be understood by all involved project personnel. The Regional Materials Engineer or the Olympia Service Center Materials Laboratory personnel should be consulted in these cases.

2-3.2 Embankment Construction

2-3.2A General Instructions

a. It is expected that the Contractor will construct roadway embankments in accordance with the plans and specifications using construction methods and equipment considered suitable for the type of work involved. All operations must be directed toward constructing a uniform, well-compacted embankment true to grade and cross-section.

b. It is sometimes necessary to construct an embankment across wet and swampy ground which will not support the weight (mass) of heavy construction equipment. It is the responsibility of the Contractor to select a method of construction and type of equipment which will least disturb the soft foundation. It is permissible to start the embankment by dumping and spreading the first layer to a thickness capable of supporting construction equipment across the soft ground, however, this initial lift should be held to the minimum thickness required for equipment selected in conformance with the above. The remainder of the embankment shall be constructed in layers and compacted as specified. Compaction will be required on initial embankment lifts wherever conditions will permit placement and compaction as specified.

c. Proper compaction of roadway embankments and embankment slopes is of vital importance to the structural quality of the final roadway and strict adherence to specification requirements is essential. The type and thickness of the final surfacing and pavement is designed on the basis of the strength of the underlying materials, and the strength of these materials is affected greatly by their state of compaction, therefore, it is essential that the specified density be obtained. To enable the Project Engineer to determine that embankments are being compacted properly, control test procedures and density standards have been developed for use during construction. It is expected that these aids will be utilized to the fullest extent necessary to determine that all embankments are constructed in accordance with specifications. Complete instructions for making maximum density and optimum moisture content determinations for soils and for making field density control tests are furnished with the appropriate testing equipment and in Chapter 9 of this manual.

d. The Project Engineer and the Inspector should understand thoroughly the elements of the compaction process and compaction control procedures. The following brief resume should be supplemented by study of appropriate publications on this subject and by consultation with the Regional Materials Engineer. In general, it can be stated that each soil has a maximum density to which it can be compacted with a given compactive effort. For this compactive effort, the maximum density will be obtained only at one moisture content. Increases or decreases in moisture cause a reduction in the density obtainable with the given compactive effort. When the moisture content is lower than optimum, additional compactive effort is necessary to achieve the specified density. When the moisture content is above optimum, low densities will result, and a soft, spongy condition may develop during the compaction process. In most cases, the moisture content of the material should be less than optimum when the material is covered, due to the fact that frequently materials are over-compacted by the heavy construction equipment now in use. Once the material is covered with another layer of material, it is very unlikely that the moisture content of the material will decrease.

e. Certain soils, primarily fine grained soils having high silt content, may become unstable by virtue of being over compacted even at moisture contents at or slightly above optimum but within specification limits. When working with these soils, the moisture content should be reduced below the maximum allowed if at all feasible, this may require aeration. Specifications provide for payment for this work. Also the Contractor should be requested to compact only to the minimum requirements; however, this is difficult to control. With modern heavy hauling and compacting units, over-compaction occurs with increasing frequency.

When high fills are involved, not only may the subgrade be unstable, but the overall stability of the fill may be reduced to the point that slump failure will occur. When such soil and moisture conditions are encountered, the Project Engineer should recognize the potential danger and notify the Regional Operations/Construction Engineer. Should corrective measures be necessary, one or more of several procedures may be used. When low fills are involved, increasing the surfacing depth, mixing with granular materials available, or allowing the fill to set undisturbed for a period of time may prove satisfactory. When a high fill is to be built, sandwiching layers of free-draining material, incorporating a system of trench drains, or mixing with other materials may prove satisfactory. In all cases, the correction must be aimed at neutralizing the excess pore-water pressure or changing the character of the material. Section 2-03.3(14)J of the *Standard Specifications* provides for the use of gravel borrow material for this type of work.

The gravel borrow may be mixed with the embankment material by placing a layer of the embankment material on a layer of gravel borrow and mixing the two materials using aeration equipment. The materials shall be mixed and the moisture content reduced to a satisfactory level. During drying weather, the gravel borrow material will tend to speed the reduction in moisture of the embankment material. After the moisture has been reduced to a satisfactory level, the layer of material must be compacted to the required density before another layer of material is placed. It is quite important that the moisture be reduced to a satisfactory level or the advantage of mixing with the gravel borrow will be lost.

An alternate method is to intersperse layers of gravel borrow throughout the embankment to reduce the pumping action of the soil and provide drainage for excess moisture. This method is preferred over mixing. The embankment material must be uniformly graded and sloped to the outside of the embankment so any excess moisture will have a chance to drain off. Care must be taken in placing the layer of gravel borrow so ruts or pockets are not formed in the embankment material which will trap moisture and prevent its draining off. The depth of the layers of embankment materials that will maintain the desired embankment stability shall be determined by field tests.

Drainage problems occur quite frequently when an existing embankment is widened, if there is moisture present in the existing embankment, through capillary action, subterranean drainage, or otherwise. If the new embankment traps the water in the existing embankment, usually the moisture saturates the embankment to a point that slump failure occurs. Whenever an existing embankment that could receive moisture is to be widened, drainage must be provided through the new embankment area. If the new embankment material is not free draining, one method of providing drainage is to layer the new embankment with gravel borrow layers at approximately 10-foot (3-meter) intervals vertically. Where seepage is noted, the Regional Materials Engineer should be consulted so that an adequate drainage system is provided.

f. When it is anticipated that certain cuts or borrow areas will contain considerable amounts of material with moisture content in excess of the optimum for proper compaction of embankments, aeration equipment may be included in the proposal for the project.

The inclusion of aeration equipment in the proposal will not relieve the Contractor of the responsibility of employing sound and workmanlike procedures in the prosecution of the work which are effective in constructing embankments with wet materials. Ditches to remove surface or subterranean drainage should be constructed whenever they can be effective and preferably in advance of excavation, thus permitting time for drainage.

The function of aeration equipment is to provide thin, loose layers of material from which moisture can evaporate. Most soils tend to form a crust which retards the evaporation of moisture. Unless this material is worked to break up this crust, evaporation is quite slow. During good drying weather, a sheepsfoot roller is quite effective in certain soils in breaking up the surface of the soil and, in thin lifts of material, leaves large surface areas of soil exposed to the air. However, no separate payment for a sheepsfoot roller will be made and the costs of same are incidental to embankment compaction.

If the material has a considerable amount of moisture above the optimum for proper compaction of embankments, it may be necessary to operate aeration equipment in the excavation areas as well as the embankment areas to increase the amount of material exposed for evaporation. The amount of moisture that will evaporate from the material is dependent on the prevailing weather conditions, the surface area of material exposed and the length of time the material is exposed to the air.

It must be kept in mind that thin, loose layers of material will also soak up large amounts of moisture if it rains, so the surface of the materials must be sealed and sloped to drain off moisture whenever rain is imminent. It is the responsibility of the Contractor to seal the material against rain and in many cases this will have to be done at the end of work each day to protect against sudden, unexpected storms.

g. The maximum density and optimum moisture content for a soil are determined by testing the soil in accordance with WSDOT Test Method No. 606 or AASHTO T 99 Method A as prescribed in Section 2-03.3(14)D of the

Standard Specifications and described in Chapter 9 of this manual. This data is used to establish the density required by specifications. Each different soil may, and probably will, have a different maximum density and optimum moisture content, and it is necessary that tests be performed in the field for each different soil encountered. As each of the materials is being tested, a representative sample should be taken and placed in a sealed sample jar to serve as a future reference for identifying the materials on the grade during construction. It is the responsibility of the Project Engineer to arrange for all field testing necessary to supplement data furnished with the soils report.

Noncohesive sandy and gravelly soils and surfacing aggregate cannot be tested by the above-noted test method. Samples of these materials must be sent to the Regional Materials Engineer with a request for maximum density determination. This test method is described in Chapter 9 of this manual. A gradation vs. density curve will be established for use by the Inspector during construction.

h. To determine if the embankments are being compacted properly, in-place density tests must be taken at frequent intervals. Results of these tests are compared to the density standard established for the soil (noncohesive granular material) being compacted, and are used as the basis for accepting or rejecting the work of the Contractor. Each lift of embankment should be tested before subsequent lifts are placed. When loose free draining sandy material is used for embankment construction, the Inspector should dig down 1 foot (300 millimeters) and run a density test on the undisturbed material. In selecting an area to be tested, the Inspector should choose sites where the least compactive effort has been applied. A continuous record of the Contractor's method of compaction should be kept and compared to test results to assist in selecting a routine procedure which will yield required results. Compaction is required to the neat lines of the embankment, which include the shoulders and slopes. Proper compaction of embankment slopes will tend to minimize slope surface erosion which occurs often on newly constructed embankments.

Care must be taken to see that uniform density is obtained throughout each fill rather than to have some areas compacted greatly in excess of the density requirements, while other areas are below requirements. In order to achieve uniform density, it is essential that the water content be uniform since the density obtainable with a given soil is a function of the water content for any one compactive effort. In most cases, the required density can be obtained with the least effort if the water content is very close to, but less than, the optimum established by standard moisture-density test. Noncohesive granular soils usually compact most easily when wetted to near saturation. The Contractor should be encouraged to establish a definite routine for compaction that will result in uniform compactive effort. When a considerable amount of grading equipment is concentrated in a small embankment area, it is difficult to maintain uniform compaction methods on each lift and the Inspector must be especially alert. When the size of the embankment area can be increased, uniform compaction methods can be more readily established, thinner lifts of material can be placed and moisture content can be better controlled.

The Speedy Moisture Tester is a good tool for the Inspector to use to check the moisture content of the material while it is being worked in the embankment. This will quickly tell the Inspector whether moisture must be removed or added before the layer is covered with additional material. The Inspector must be cautioned that due to the small amount of material used in the speedy moisture tester, it is essential that the sample used is actually representative of the material being worked. If the moisture content of the material being worked is quite uniform, this does not present too much of a problem.

When embankment construction is first started, the Inspector should give particular attention to the compaction methods and take more than the minimum number of density tests to determine the most advantageous compaction pattern that will give the desired compaction results. After a satisfactory compaction pattern has been established for the type of material being placed, the density testing may be reduced to the minimum rate specified.

Where it is necessary to add water for compacting, this may be done either in the cut (or borrow pit) or on the fill. Water must not be added to material obtained from a borrow pit before weighing when payment is by weight (mass). Addition of water in the cut allows the scrapers and hauling equipment to mix the water into the soil so that rolling can proceed immediately after spreading. Sprinkling should be done on a rough loose surface rather than on one which is smooth and tight because the water will not be so apt to run off or form ponds.

Daily compaction reports shall be submitted on Form 351-015. If there are questions concerning operational procedure on moisture-density tests, in-place tests, and reporting of results on the above form, consult the Regional Materials Engineer for advice and assistance.

Special attention shall be given to compaction around structures and bridge ends, where rollers cannot operate. Mechanical tampers or other approved compactors are to be used in these areas. Sufficient density tests shall be taken to ensure that compaction is continued on each lift until the specified density is attained. Failure to do so can result in settlement near the structure.

2-3.2B Rock Embankments

As established compaction tests cannot be applied to coarse granular material with any degree of accuracy, embankment construction has been divided into two classes: rock embankments and earth embankments, as defined in Section 2-03.3(14) of the *Standard Specifications*. It should be noted that this designation is made for the fundamental purpose of determining the method of embankment construction and compaction control to be used, and that it depends only upon the gradation of the excavation material. It is not necessary that an embankment be built entirely of rock material to be designated as rock embankment. Rock embankment is defined as "all, or any part, of an embankment in which the material contains 25 percent or more by volume of gravel or stone 4 inches (100 millimeters) or greater in diameter." The Inspector shall make visual inspection of the embankment material to ascertain whether it contains 25 percent or more of material 4 inches (100 millimeters) or greater in diameter. For rock embankment, in lieu of controlling compaction by performing tests, a given amount of compactive effort is specified in Section 2-03.3(14)A of the *Standard Specifications*. Where the stability of a rock embankment is in question, moisture and density control as specified in Section 2-03.3(14)B and C of the *Standard Specifications* shall pertain. It is considered that uniform compaction to the full width of the embankment normally will not be achieved by routing hauling equipment over the roadway. Rolling equipment shall be required as specified whenever it is possible to operate such equipment on the material being placed. Decision to require or delete the use of rollers as specified shall be based on feasibility of operation rather than on an arbitrary estimate of benefits achieved, as this factor is very difficult to evaluate without conducting extensive and expensive tests.

2-3.2C Earth Embankments

a. Procedures for constructing earth embankments are described in Section 2-03.3(14)B of the *Standard Specifications*. Compaction in accordance with one of three methods designated as Method A, Method B, or Method C as specified in Section 2-03.3(14)C shall be utilized. Unless otherwise specified in the special provisions, Method B will apply. The basic requirements of all three methods are the same in that each requires lift construction, uniform compaction throughout the embankment width and depth, control of moisture content to not more than 3 percent above optimum, and the addition of moisture should it be necessary for proper compaction. The difference between the three methods lies in the thickness of lifts specified, the degree and control of compaction required, and the degree of control of moisture below optimum. The use of suitable compaction units is required for Method B and Method C, although routing of hauling units may be used to obtain partial compaction.

b. Method A normally will not be specified for state highway work, but may be applied on county or city projects or on certain secondary state highway projects. Embankment lifts up to 2 feet (0.5 meter) in thickness may be placed, and compaction is achieved by routing the hauling equipment over the entire width of the embankment. Inspection should determine that the routing schedule is such that all parts of the fill receive the same amount of compaction, including the outer edges of the fill. Drying of soil or addition of moisture may be required, if necessary.

c. Method B will be used on all state highway projects except where other methods are specified. This method requires that the embankment be constructed in lifts not exceeding 8 inches (200 millimeters) in loose thickness except that lifts in the upper 2 feet (0.5 meter) shall not exceed 4 inches (100 millimeters) in loose thickness. Ninety percent of maximum density is required throughout the embankment except that 95 percent of maximum density is required in the upper 2 feet (0.5 meter). Control density tests must be performed to verify compliance with specifications. The Contractor shall be required to dry soil or add moisture as necessary to ensure proper, uniform compaction. The selection of compaction equipment or methods is the responsibility of the Contractor; however, the use of any method or equipment that does not achieve the required density within a reasonable time may be ordered discontinued. The entire embankment, including the side slopes, shall be compacted to specification requirements.

d. Method C will be required when it is considered essential to the structural quality of the embankment that the entire fill be compacted to a high density. This method differs from Method B in that the entire embankment must be compacted to 95 percent of maximum density. Also, a limit is specified for minimum moisture content in addition to the maximum to ensure moisture content uniformity. In all other respects, the two methods are the same, and each requires a high standard of compaction control.

2-3.3 Borrow Pits

The material in borrow pits must be satisfactory for the use it is intended. If the character of the materials is not readily visible, adequate sampling and testing should be done to verify the quality and the quantity of material available. The Project Engineer should check the records to see that this determination has been made, and if any doubt exists to the adequacy of the source, the Regional Materials Engineer should be contacted to see if further testing is indicated. This detail could save considerable time, expense, and future problems if it is determined that a pit is unsatisfactory before extensive work is performed in opening the pit and then discovering that the material is not acceptable.

Sections 2-03.3(14)K, 9-03.20, and 9-03.21 of the *Standard Specifications* provide for the use of select and common borrow for use in construction of embankments. Materials which meet these specifications are intended for use where it is not necessary to strictly control the strength properties of the borrow. Select or common borrow materials should not be used as backfill for mechanically stabilized earth walls, to backfill unsuitable material excavation below groundwater, or as foundation material for any structure, unless specifically approved for use by the Olympia Service Center Geotechnical Branch. The material requirements for select and common borrow will not ensure that the materials will be workable and able to be compacted under inclement weather conditions. Because select or common borrow materials may be subject to moisture sensitivity as described above and in Chapter 2-3.2A(e), compaction of these materials may require control as specified in Section 2-3.3(14)D of the *Standard Specifications*.

Common borrow, as specified by Section 9-03.14(3) of the *Standard Specifications*, may be virtually any soil or aggregate, either naturally occurring or processed, which is substantially free of organics or other deleterious material, and is nonplastic. The specification allows for the use of more plastic (clayey) common borrow when approved by the Engineer. The use of more plastic (clayey) material may require approval of the Regional Materials Engineer or the Olympia Service Center Materials Lab. The 3 percent maximum organic material requirement for common borrow may be determined visually, or, as necessary, by one of the following test methods: AASHTO T 194 (Organic Content by the Wet Combustion Method) or AASHTO T 267 (Organic Content by Loss on Ignition). The correct test method is determined based on the type of organic material present in the soil sample. The Regional Materials Engineer should be consulted as to the appropriate test method. The sample may be field determined to be nonplastic if the fraction of the material which passes the U.S. No. 40 (0.425 mm) sieve cannot be rolled into a thread at any moisture content using that portion of AASHTO Test Method T 90 (Determination of the Plastic Limit of Soils) which describes rolling the thread.

The requirements of Section 2-03.3(13) of the *Standard Specifications* must be observed in the operation and cleanup of borrow pits. With the requirement for reclamation of all pits, a plan must be developed to meet the requirements of the specifications and special provisions and approved before the start of pit operations. See Chapter 3-3 of this manual.

2-3.4 Temporary Water Pollution/Erosion Control

Section 1-07.15 of the *Standard Specifications* covers the requirements for controlling erosion and water pollution on the project. These provisions limit the area of erodible earth material which may be exposed at one time and provide that the Contractor will be paid for construction of temporary pollution/erosion control work.

Prior to the start of the applicable construction, the Contractor is required to submit for acceptance a plan and schedule for accomplishment of temporary water pollution/erosion control and permanent erosion control work. This plan and schedule shall be submitted, reviewed, and approved as specified in Section 1-07.15 of the *Standard Specifications*, prior to the beginning of work. If the contract includes a plan, the Contractor needs to accept the plan by letter prior to starting work. This plan should be reviewed to see that the Contractor has attempted to anticipate all the erosion and water pollution problems that may exist and has outlined and scheduled positive methods to alleviate or control them. If the plan appears to be adequate, acceptance shall be given by the Project Engineer after receiving concurrence from the Regional Environmental Office.

Scheduling of permanent erosion control shall be incorporated as activities in the required progress schedule for the project and shall be evaluated as to adequacy on the basis of scheduling at the earliest time practical.

Preplanned or obviously required temporary water pollution/erosion control measures may be included in the required progress schedule or scheduled separately. Where appropriate, they should be keyed to project schedule activities.

Temporary water pollution/erosion control needs that cannot be predicted may be outlined as procedures that will be used should certain conditions develop.

To meet the requirements of the specifications at the beginning of the project while the Contractor is preparing a CPM project schedule and pollution control plans, the Contractor may submit a letter covering the erosion control plans and schedule for the initial phase of the construction. This letter must be followed up with plans as soon as practicable. The following are some of the features that should be covered in the Contractor's proposal:

a. Time period initial earthwork is to be accomplished (by date).

b. Station limits of earthwork related items.

c. Mobilization effort and scheduling of adequate personnel, equipment, and material.

d. Outline of basic earthwork construction features.

e. Outline of specific problem areas and methods to take care of them.

f. Applicable contract plan sheets marked in red.

On smaller projects, this letter schedule may be adequate in fulfilling the contract requirements.

On larger, more complex projects, the pollution/erosion control work could be included in the CPM schedule or covered in several letters and plans covering each phase of the project as the work progresses.

Where erosion is likely to be a problem, the specifications limit the area of erodible earth material that may be exposed at one time by clearing and grubbing to 750,000 square feet (70,000 square meters), without the approval of the Engineer. If clearing is done separately from the grubbing work, erosion may not be a problem and therefore, the area of clearing would not have to be limited, but the area of grubbing would if the area is erodible. If the Contractor feels that the area limitation for grubbing is too restrictive to accommodate the grading operations, a request should be submitted for approval to open a larger area and outline the proposed plan and schedule for all temporary or permanent pollution/erosion control that may be necessary. The temporary erosion and water pollution control measures to be taken must be consistent with the potential for the amount of damage that may be anticipated.

The area of excavation, borrow, and embankment operations in progress is also limited by the specifications to 750,000 square feet (70,000 square meters) and must also be commensurate with the Contractor's capability and progress in keeping the finish grading, seeding, mulching, and other permanent erosion and water pollution control measures current in accordance with the approved schedule. If the Contractor feels this area limitation is too restrictive, a request should be submitted the same as outlined for the clearing and grubbing work.

Evaluation of the Contractor's request for increased areas shall be the Region's responsibility and shall recognize that the job progress is of critical importance and should not be impeded except when clear probability of detrimental erosion potential exists or where permit constraints may be violated.

Any pollution/erosion control work provided in the plans, shall be paid as specified in the contract. Other water pollution/erosion control work performed in accordance with the approved plan or ordered by the Engineer will be paid for as detailed below:

1. WSDOT Provided Sources Haul Roads for Same and Haul Roads Provided in the Contract.

Such water pollution/erosion control work which does not differ materially from specified contract work shall be measured and paid for at unit contract prices.

Such water pollution/erosion control work not covered by contract items will be paid for on a force account basis in accordance with Section 1-09.6 of the *Standard Specifications*.

2. Equipment Storage Sites, Contractor Provided Sources and Haul Roads for Same (in lieu of WSDOT provided sources).

All temporary water pollution/erosion control requirements as detailed in the specifications will apply.

All work as scheduled will be performed by the Contractor at no expense to WSDOT.

3. Commercial Sources.

The exception to Contractor provided sources will be commercial sources. All water pollution control requirements are the responsibility of the owner and/or operator of any commercial sources.

To further clarify areas of payment and nonpayment, the following examples are listed:

1. Operational expenses incurred on water pollution control facilities will be paid for by force account. This shall include servicing and cleaning settling basins, diversion ditches, and temporary culverts.

2. Settlement ponds for control of pollution while dewatering of excavations or cofferdams are eligible for payment. Temporary water pollution control measures required as a result of stream diversion to allow construction of permanent facilities are also eligible for payment.

3. Any temporary erosion and water pollution control work that is required due to the Contractor's negligence, carelessness, or failure to install permanent controls as part of the work as scheduled, shall be constructed by the Contractor at no expense to WSDOT.

These are but a few examples and it is realized that isolated circumstances will arise which will need further study. Any questions should be referred to the Regional Operations/ Construction Engineer and if necessary, to the Olympia Service Center Construction Office.

Since the Contractor is responsible for any erosion or pollution damage which may occur on the project, the Contractor must anticipate potential erosion and pollution problems and propose methods to take care of the problems. Any reasonable proposed method should be carefully reviewed to avoid placing ourselves in a position of being responsible in case of damage because of our denial of the Contractor's proposed method.

In the Fall months, prior to the "rainy season" or a winter shutdown, the Project Engineer must schedule an on-site review of the project with the Contractor for the specific purpose of identifying appropriate erosion prevention measures that can be taken, such as constructing temporary ditches, sumps, pipes, ditch lining, slope cover, etc., which will reduce and minimize the potential for erosion during the winter months.

2-3.5 Measurement and Payment

2-3.5A General Instructions

Quantities and items involved in grading operations including compaction of embankments shall be measured and paid for in accordance with Sections 2-03.4 and 2-03.5 of the *Standard Specifications*, and Chapter 10 of this manual.

2-3.5B Computer Generated Quantities

Utilizing the current programs available through the department, the personal computer (PC) may be used to determine earthwork quantities, finished roadway or subgrade elevations, slope stake data, and haul quantities.

The type and size of the project and the amount of time that can be saved will be considerations in how much information should be generated by the use of the PC.

All applicable records of computed data shall be kept and become a part of the final records. If the computer was not used in the design stage of the project, it may still be convenient and economical to prepare data to submit for construction quantities.

2-3.5C Use of Photogrammetry Service

The photogrammetry service may be used to create a 3D Digital Terrain Model (DTM) files for use with the department's current design software in order to produce cross sections, contours, and quantity information. Photogrammetry can also provide Digital Ortho Photos as a by product instead of the DTM files. The Ortho Photo has the same accuracy characteristics as a map but without the elevation data. The type and size of the project and the amount of time that can be saved will be considerations in the selection of the method of obtaining the ground line cross-sections. The Project Engineer must also ascertain that the work schedule of the Photogrammetry Section will permit them to provide the DTM files and Digital Ortho Photos by the time they are required. If proper ground control was established on the project during the design stage, considerable savings in time may be realized by using this service.

It is recommended that the Photogrammetry Branch be contacted at the earliest possible date when it is determined that this service may be needed, since the process requires significant time and the weather and position of the sun (angle of the sun's rays) in Washington can affect Photogrammetric mapping schedules by weeks or even months.

The 3D DTM files and Ortho Photos are obtained from aerial photographs and will show the ground as it existed at the time the photographs were taken. This data is measured in the Stereo plotter and transferred to computer files. The Photogrammetry Branch will design each photo mission and mapping process to best fit the needs of the project as defined by the Project Engineer. The Photogrammetry Branch maintains an active archive of each new project's files and all DTM data produced since 1989. It is easily accessible via WSDOT LAN on a file server type computer. Contact the Photogrammetry Branch for specific information on past projects and archived data.

2-4 Haul

2-4.1 General Instructions

Haul is the transportation of excavated material. Measurement and payment for haul is made on material hauled.

The measurement of haul is expressed as a unit of one hundred cubic yards (meters) hauled 100 yards (meters).

Haul quantities can be computed using the PC and associated programs on all earthwork projects and the limits of each segment of haul and the "Haul" units can be identified.

Haul shall be calculated and included in the section from which the material is hauled. Haul on roadway quantities, including borrow obtained by the widening of cuts and including waste deposited along roadway embankment slopes, will be computed on the basis of transporting material along the centerline or base line of the highway.

2-4.2 Vacant

2-4.3 Haul on Borrow or Waste

Quantities of material hauled from a borrow site to the roadway or from the roadway to a waste site are computed normal to the long axis of the borrow or waste site. When computing the amount of haul, determination of the direction of movement of the mass and the distance it is transported requires good, practical judgment by the Engineer. The size and shape of a borrow pit and egress from the pit to the highway improvement must be considered in the proper determination of the amount of haul. The same conditions are true in the case of waste sites. Instructions herein for computing haul from borrow pits shall be applicable to computing haul to waste sites.

The long axis of the borrow pit should be used for the base line of the cross-section which, theoretically, would pass through the centers of gravity of the sections; however, the

base line may approximate the centers of gravity of the sections. Borrow pits which are provided by widening of the roadway cuts would be an exception to this since the *Standard Specifications* define them as "Roadway Excavation" and not "Borrow."

The measurement of the distance from the pit to the center line of the roadway should originate at the center of mass as measured in the pit and be computed via the most direct and feasible route to the nearest practical point on the center line of the roadway.

The route of haul will be indicated on the plans, and, where possible, will be via existing roads. If no road exists, provision will be made in the plans for constructing a haul road and for rights therefor.

If the Contractor chooses to haul over a route shorter than the computed or designated route, payment for haul will be based on the length of the actual haul route. If the Contractor chooses to haul over a longer route than the computed or designated route, payment for haul will be based on the length of the computed or designated route.

2-5 Slope Treatment

2-5.1 General Instructions

Earth cuts, soft or decomposed rock cuts, and overburden in all rock cuts shall have the tops of the slope rounded in accordance with *Standard Plan* H-8 to produce an aesthetic and pleasing appearance. The slope treatment shall be constructed at the time of excavation so the material resulting from the rounding of the slopes may be disposed of along with the excavation from the cut.

The Project Engineer should go over the slope treatment procedure with the Contractor at the beginning of the excavation operation to ascertain that proper rounding is being constructed and reduce extensive reworking.

2-5.2 Measurement and Payment

Slope treatment shall be measured and paid for in accordance with Section 2-03.3(5) of the *Standard Specifications*.

2-6 Subgrade Preparation

2-6.1 General Instructions

The subgrade shall be constructed in accordance with the lines, grades, and typical sections shown on the plans or as established by the Engineer and the *Standard Specifications*.

The subgrade should be uniformly compacted to the density specified rather than to have some areas just meeting the requirements while other areas are considerably above the minimum requirements. The subgrade shall meet the tolerance in Chapter 1-6 of this manual. On some separate grading projects where the surfacing Contractor will be required or elects to trim the subgrade with an automatically controlled mechanical trimmer, the tolerances for the subgrade must be changed to provide material for the subgrade trimmer to trim, but the trimmed subgrade must meet the tolerance stated above.

After the subgrade is prepared, the Contractor shall maintain it in the finished condition until the next course of work is preformed.

2-6.2 Measurement and Payment

The quantities of work involved in constructing and maintaining the subgrade shall be measured and paid for in accordance with the provisions of Section 2-06.5 of the *Standard Specifications*.

2-7 Watering

2-7.1 General Instructions

Water shall be applied as ordered by the Engineer, in accordance with the specifications, uniformly to the material so that all of the material will have approximately the same moisture content. It is more economical and effective to apply water at night or in the early morning hours when loss from evaporation is lower. In many instances, this is the only time that it is possible to increase the moisture content to that required.

The Inspector should be alert to see that the subgrade is not damaged from too much water being applied or that more water is being applied than is necessary. Usually light applications applied more frequently are more advantageous than heavy applications. The water should not be applied on surfacing materials with such force that it will wash the fine particles off the coarser ones causing segregation.

If water is a pay item, the Project Engineer shall verify the size of the water truck by measuring or weighing and if gauges are used, he should also verify the accuracy of the gauge. A record of measurements or weights (masses), and calculations must be made for future references.

A Daily Delivery Record, Form 422-024, showing the time of each load and where it was placed should be maintained on the project. The Inspector will issue a ticket for the amount of water used.

2-7.2 Measurement and Payment

Water shall be measured and paid for in accordance with the provisions of Sections 2-07.4 and 2-07.5 of the *Standard Specifications*.

2-8 Vacant

2-9 Structure Excavation

2-9.1 General Instructions

Before starting structure excavation, stakes should be set to locate the structure and cross-sections should be taken to determine the quantities of material involved.

During the progress of excavation, the character of material being removed and exposed should be examined to determine if it is suitable for use as backfill and to ensure that acceptable foundation conditions exist. This should be done especially on streams subject to high velocity flood water and which carry drift. Open pit excavation or "glory holes" are not allowed without permission. This specification is of special importance in application to the construction of foundations in or adjacent to running streams, where the approval of the Olympia Service Center Construction Office should be secured.

Material obtained from structure excavation may be used for backfilling over and around the structures, for building embankments, or it may be wasted. When this material is stockpiled for backfilling, the Contractor is required to protect it from contamination and the elements. If not properly protected, the Contractor must replace the lost material with acceptable backfill material at no expense to WSDOT. The backfilling of openings made for structures must be made with acceptable material from the excavation, other acceptable backfill materials indicated in the plans and special provisions, or as specified in Section 2-09.3(1)E of the *Standard Specifications*.

When water is encountered in the excavation area, it must be removed before backfilling. Cost for accomplishing this is considered incidental and is done at the Contractor's expense unless otherwise provided for in the contract.

All excavation 4 feet (1.22 meters) or more in depth shall be shored, or protected by cofferdams or shall meet the open-pit requirements of Section 2-09.3(3)B of the *Standard Specifications*. The Contractor must submit his shoring plans in accordance with Section 2-09.3(3)D of the *Standard Specifications*. These drawings must be approved before construction begins. WSDOT's approval, however, does not relieve the Contractor of responsibility of satisfactory results.

The Contractor shall submit detailed plans of cofferdams for approval as required in the *Standard Specification*, Section 2-09.3(3)D when there use is required. This requirement shall be strictly followed. When a cofferdam is required on a railroad right of way, excavation must not be commenced before the plans have been approved by the railroad company. The Contractor should be notified of this requirement well in advance of starting such work, as it usually takes several weeks to get plans approved by the railroads. See Chapter 6-1.5 of this manual for the number of copies to submit and distribution of approved plans.

Cofferdams, in general, must be removed to the bed of the stream, or to below the low water mark. In some cases, it may be advisable to leave the cofferdam in place. The Cofferdam is, however, the property of the Contractor.

When sheet piles are used for cofferdams, the Project Engineer shall see that the sheets are held tightly together during driving and placing, so that no cracks or holes are left, through which water can flow. If timbers are used in the cofferdam, the use of wood preservatives needs to be monitored to be sure that all environmental constraints are met. Cofferdams should be built slightly larger than the neat size shown on the plans. This is to allow for inaccuracy of driving sheet piles.

Where bearing piles are to be driven, the excavation should be carried deeper to allow for upheaval of soil due to pile driving. This extra depth will depend on the character of the material. Usually in sand and gravel from 6 inches (150 millimeters) to 1 foot (300 millimeters) and a river or tide mud from 1 foot (300 millimeters) to 1.5 feet (450 millimeters) is sufficient. Such over-excavation is the Contractor's responsibility. Over-excavation shall be backfilled with gravel backfill to the footing elevation if the upheaval is less than anticipated.

In soft mud, when the driving of piles tends to liquefy the foundation material, it is sometimes necessary to excavate below plan grade and backfill with gravel before concrete is placed. When the Engineer considers this to be necessary and approval of the OSC Bridge Construction Office has been secured, the additional excavation shall be paid for at the unit contract price for structure excavation and the gravel backfill shall be paid for on force account basis or at an agreed price.

Excavations shall be carried to the elevation shown on the plans or as established by the Engineer. The Project Engineer should take into consideration the fact that when a clamshell bucket is used, it is very difficult to clean the hole to an exact given elevation. For direct-bearing footings, the corners and sides of the excavation should be cleaned out as well as possible and there should not be an excess of loose material left in the bottom. If the character of the material found at plan elevation is questionable, consult the Regional Materials Engineer.

When the excavation for the footing has been completed, elevations to establish the footing elevation shall be taken in the corners of any footing and recorded in the project records.

The material on which spread footings are to be constructed must be adequate to support the design soil pressure per square foot (meter) shown in the plans. The Regional Materials Engineer should be consulted to review the foundation conditions if the bottom of the footing is materially different than what is identified in the contract plans. If a change of design or the lowering of a footing appears to be advisable, the Olympia Service Center Construction Office must be advised.

Occasionally, foundations adjacent to large piers are founded at a higher elevation than the large pier foundation. In these cases, the Contractor must carry on operations so that the foundation at the higher elevation will not be disturbed when excavation is made for the lower pier.

Backfilling holes made for piers and column bents up to the surface of the surrounding ground may be done at any time after the forms are removed, providing the backfilling is brought up evenly on all sides of the pier or column.

Backfilling around piers and bents in streams shall be done carefully with material suitable to resist scour, and be brought up to a height not less than the original bed of the stream. Embankment backfill against abutments, piers, walls, culverts, or other structures shall not be placed until the concrete has attained 90 percent of its design strength and has cured for at least 14 days or as otherwise specified in the contract.

It is very important that drainage be provided in back of retaining walls, tunnels, and structures having wing walls or abutments to eliminate excessive soil pressure. Weep holes shall be placed as shown on the plans and as low as possible. Gravel backfill for walls or other suitable materials shall be placed directly behind the structure. If drainage is a major problem, it may be necessary to also construct perforated drain pipe or French drains behind the structure.

The construction of embankments and backfill around bridge ends shall be in accordance with Section 2-03.3(14)I of the *Standard Specifications*. The fill around bridge ends shall be brought up equally on all sides of the bracing, columns, and bulkheads to avoid distortion and displacement of these members.

In addition, Section 2-03.3(14)I of the *Standard Specifications* requires that the superstructure be in place before the backfill behind an abutment can be placed. It further states that this requirement can be waived by the Engineer provided the Contractor submits abutment stability calculations to back up their proposal. When designing the bridge, the designers check the abutment stability using the final condition which includes the dead load of the superstructure. This superstructure dead load increases the resistance to sliding and reduces the overturning moment of the abutment. Since placement of the backfill prior to placement of the superstructure is a condition not analyzed by our designers, we require that stability calculations be submitted for each bridge by the Contractor to reflect this unchecked condition. These stability calculations need to include a surcharge load of at least 2 feet (0.6 meters) to account for the live loading due to the backfill equipment weight (mass).

Around structures and bridge ends, where rollers cannot operate, compaction shall be obtained by the use of mechanical tampers. Density tests shall be taken frequently enough to ensure that compaction is continued on each lift until the specified density is attained.

Structure excavation is classified into two classes. The excavation necessary for the construction of bridge footings, pile caps, seals, wing walls, and retaining walls is classified as Structure Excavation Class A. All other Structure Excavation is classified as Structure Excavation Class B. See Sections 2-09.3(2), 2-09.3(3), and 2-09.3(4) of the *Standard Specifications*.

2-9.2 Measurement and Payment

Structure excavation shall be measured and paid for in accordance with the provisions of Sections 2-09.4 and 2-09.5 of the *Standard Specifications*.

2-10 Ditch and Channel Excavation

2-10.1 General Instructions

Areas where open ditches are to be constructed shall be cleared and grubbed the same as areas for roadway excavation.

The excavated material may be used for the construction of dikes, berms, or otherwise disposed of as shown on the plans or as directed by the Engineer. The materials should not be placed in embankments unless it is suitable for embankment construction.

2-10.2 Measurement and Payment

Ditch and channel excavation shall be measured and paid for in accordance with the provisions of Sections 2-10.4 and 2-10.5 of the *Standard Specifications*.

2-11 Trimming and Cleanup

2-11.1 General Instructions

This work shall consist of dressing and trimming the entire roadway or roadways improved under the contract. The shoulders, ditches, and back slopes shall be trimmed to the specified cross-section to produce a neat and pleasing appearance. All channels, ditches, and gutters shall be

opened up and cleaned to ensure designed drainage. This includes existing drainage within the project limits specified in the contract.

2-11.2 Measurement and Payment

Trimming and cleanup will be measured and paid for in accordance with the provisions of Sections 2-11.4 and 2-11.5 of the *Standard Specifications*.

2-12 Construction Geotextile

2-12.1 General Instructions

Construction geotextile fabric needs to be fully covered at all times until placement. It should be stored in a protected area off the ground and away from items that can cause damage such as sunlight, heat, precipitation, chemicals flames including welding sparks and any other environmental condition that may damage the physical properties of the fabric.

The area to be covered should be graded to a smooth, uniform condition free from ruts, holes, and protruding objects such as rocks and sticks. The fabric needs to be placed immediately ahead of the covering operation with as few wrinkles as possible. The material should not be dragged through the mud nor over sharp or protruding objects which could damage the material.

The cover material is to be placed in front of the placing equipent. This quipment should be sized to minimize the rutting that may occur during the placement. Turning of vehicles on the first lift of material may cause damage to the fabric and should not be allowed.

Sewing of seams is described in Section 2-12.3 of the *Standard Specifications*.

Fabric damaged during placement needs to be repaired as soon as possible. The backfill material needs to be removed and the fabric repaired either as recommended by the manufacture or as listed in the contract. Visible evidence of damaged material may include subgrade pumping, intrusion of subgrade, or roadbed distortion.

2-12.2 Placement

ection 2-12.3 of the *Standard Specifications* lists the required placing and lapping requirements for each type of use of construction geotextile. Following is a short explanation for the placement types.

1. Underground Drainage — The fabric is used as a wrap around the drain rock and the pipe to not only separate the backfill material from the drainage material but also to act as a filter of fine sands and silts. This prevents the fines from flowing into the drain rock and clogging the drainage system.

2. Separation — The fabric is placed directly on a subgrade that contains a large amount of fine sand and silts. Normally the subgrade can be constructed during fair weather, however, almost any amount of moisture can make working on the grade impossible.

3. Soil Stabilization — Soft subgrade that cannot support the weight of equipment constructing the roadbed, is usually removed, a fabric placed and covered with backfill. This allows a stable enough surface to continue construction. Here the fabric not only separates the two materials but also add strength to the roadbed.

4. Permanent Erosion Control and Ditch Lining — The fabric is utilized to reduce or minimize the ground surface's exposure to erosion. The material is placed directly on the surface to be protected and then backfill is placed over the fabric. Rock surfacing should not be placed in a lined ditch under the fabric as this would allow the water to erode the ground under the fabric thus eliminating its effectiveness.

5. Temporary Silt Fences — As the title states, the fabric is used to trap silt and other fine particles from continuing from the project site to open water.

2-12.3 Measurement and Payment

Construction geotextile will be measured and paid for in accordance with the provisions of Sections 2-12.4 and 2-12.5 of the *Standard Specifications*.

P65:DP/CM

Contents

		Page
3-1	**Production**	3-1
3-1.1	General Instructions	3-1
3-1.2	Preparation of Pit or Quarry	3-1
3-1.3	Sampling and Testing	3-1
3-1.4	Pit Operations	3-2
3-1.5	Outline of Inspector's Duties	3-2
3-1.6	WSDOT Furnished Material Sources	3-2
3-1.7	Pit Evaluation Report	3-3
3-1.8	Contractor Furnished Material Sources	3-3
3-1.9	Measurement and Payment	3-4
3-2	**Stockpiling**	3-4
3-2.1	General Instructions	3-4
3-2.2	Measurement and Payment	3-5
3-3	**Site Reclamation**	3-5
3-3.1	General	3-5
3-3.2	Contractor Furnished Sources	3-5
3-3.3	WSDOT Furnished Sources	3-5
3-3.4	Reclamation of Stockpile and Waste Sites	3-5

P65:DP/CM

Chapter 3 Production From Quarry and Pit Sites and Stockpiling

3-1 Production

3-1.1 General Instructions

In the production of crushed and screened materials, continuous and effective inspection throughout all phases of the work is essential in order for the Washington State Department of Transportation (WSDOT) to obtain the best possible product from the available material. The Project Engineer is responsible for the enforcement of all specifications governing pit operations, crushing and screening procedures, and handling and placing of the product, as well as the various specifications governing gradation and quality.

The Project Engineer and Region Materials Office provides the Inspectors with the proper tools to test and inspect the production of materials. They also ensure that facilities are available at the plant site to enable the Inspector to carry out the work in the proper manner and obtain test results which are accurate and complete. The Project Engineer makes certain that the Inspector understands the nature of the work to be performed and is acquainted thoroughly with the applicable specifications and that the Inspector is proficient in the various testing techniques.

The Inspector needs to be familiar with the methods and procedures involved in crushing and screening operations so that the Inspector can appraise the causes of troubles when they occur. The Engineer or Inspector must never attempt to tell the Contractor how to conduct their operations (except where required by the specifications), but a good working relationship with the Contractor, based on a mutual respect for each other's knowledge and ability, will do much to ensure an efficient operation and a good product.

3-1.2 Preparation of Pit or Quarry

The portion of the pit or quarry site to be used is prepared in accordance with the requirements of Section 3-01 of the *Standard Specifications*. The strippings from the pit are stockpiled or disposed of in accordance with the reclamation plan as covered in Chapter 3-3 of this manual. Care is taken in this operation so that usable material is not fouled or lost. In most cases, the manner in which the site is worked will determine how much work will be required to dress it up in accordance with the reclamation plan.

3-1.3 Sampling and Testing

Prior to sampling and testing the material produced by the contractor, the Inspector is required to satisfactorily complete the Construction Tester Qualification Program in Chapter 9 of this manual for the tests to be performed.

It is imperative that the Engineer keep the Contractor informed of test results at all times. If the material being produced does not meet the requirements of the specifications, the Contractor must be informed immediately that the material is unacceptable so that corrections may be made. The Inspector's Record of Field Tests is used to record the test results completed by the Inspector. The Contractor Foreman's copy of the test results should be delivered as soon as practical after completion of each test to the foreman in charge of producing the material. When the test results show the material fails to meet specification requirements, the Inspector shall explain in the remarks section on the test form what action was taken to correct the deficiency. This form has the twofold purpose of providing a record of the test results and of keeping the Contractor informed of the quality and gradation of the material being produced.

Several field control tests may be required by the specifications for the type of material involved. These tests include:

- screen analysis for gradation,
- sand equivalent test for detrimental fines,
- examination of the material to determine percentage of fractured pieces,
- moisture determination test, and
- organic matter content test.

The Inspector shall conduct these tests as often as necessary following the instructions for sampling and test methods described in Chapter 9 of this manual. When production is first started, and until the production has resulted in a uniform product well within specification requirements, tests need to be taken more frequently than the minimum specified. Special care must be exercised to ensure that the sample taken for testing is representative of the material being produced.

Samples are taken and forwarded to the Region Materials Laboratory or Olympia Service Center Materials Laboratory in the amounts and at the intervals specified in Chapter 9 of this manual. Job site samples shall be obtained, tested, and recorded in accordance with the *Standard Specifications*, the contract special provisions, and Chapters 9-5 and 10-3 of this manual.

Samples of aggregate for bituminous mixtures are submitted to the Materials Laboratory for determination of a mix design. These samples must be representative of the average grading of separate materials produced and information concerning the proportions of coarse and fine aggregates produced shall be included in the letter of transmittal. If blending sand may be required, a sample of this material shall be included in the shipment.

Ample time for testing of the materials must be allowed. A minimum time of one to two weeks is required by the laboratory to complete the tests and advise the Project Engineer of the recommended mix design. The *Standard Specifications* require allowance of 15 working days for mix design work after receipt of material and data in Tumwater.

3-1.4 Pit Operations

The Inspector must be alert to detect changes in test results, and look for evidence of changes in the character of the pit, or changes in crushing or screening procedures, as possible causes of variations. The use of production control charts provides an excellent visual means of detecting changes in the material being produced. Use of these charts is recommended for any significant production operation. Some quarries and pits contain pockets or areas of unsuitable material. The Inspector should keep familiar with the condition of the site so if areas of unsuitable material do appear, steps can be taken to bypass these materials. The inspector should also be aware of the tempo of the plant operations. A steady operation in all phases is desired. In particular, the plant should not run faster after a sample has been taken than it was prior to sampling.

Many quarries and pits require scalping to remove a portion of the fine material. When scalping is required, it is necessary for the Inspector to check to be sure the scalping screen does not become coated or plugged and allow the fine material to be incorporated into the finished product. When a scalping screen of a certain size is required in the special provisions, the Inspector shall check to see that it is of sufficient size and capacity that most of the material finer than the specified size is removed.

The Inspector must watch for evidence of segregation of the material on conveyor belts, in bunkers, or in discharging material into trucks. If any evidence of segregation is found at any stage of manufacture or handling, corrective devices, such as baffles, mixing chutes, rock ladders, etc., must be required.

3-1.5 Outline of Inspector's Duties

Some of the most important duties of inspection are listed below:

- Check special provisions for special requirements in pit operation (area to be excavated, depth of excavation, etc.).
- See that overburden is stripped from pit in proper manner.
- Watch for radical changes in the character of material in pit.
- When required, see that washing and/or scalping are conducted in a proper manner.
- See that the plant, belts and loaders operate at a constant rhythm.
- Watch for evidence of segregation of the material. Advise the Contractor to take steps to correct any segregation.
- Sampling and testing of the product by a Qualified Tester: gradation analysis, sand equivalent test, fracture, moisture, etc.
- Keep complete records of field tests.
- See that both the crushing and prime Contractors are informed of test results.
- When required, submit samples for mix design. Be sure to allow ample time for testing.
- Submit samples for determination of standard density.

3-1.6 WSDOT Furnished Material Sources

WSDOT furnished material sources normally are to be used on future projects as well as the present one so it is necessary that the material be removed in such a manner that the future usefulness of the pit is not impaired. Section 3-01.3(1) of the *Standard Specifications* requires the Contractor to submit a work plan for approval of the proposed operations in the pit before starting work in the pit so that it can be ascertained that the Contractor will not impair the future usefulness of the site.

In addition to the source containing sufficient material for the project, there should also be adequate area for the plant setup. If the project includes treated materials, consideration should also be given to provide sufficient area for the temporary stockpiling of the aggregates for the treated material and the mixing plant.

Disposal of strippings and scalpings in the site is of utmost importance if satisfactory reclamation of the site is to be accomplished with the minimum amount of work. This material should be placed where it will not interfere with future development of the site.

Surplus material accumulated during the production of specified materials will remain the property of WSDOT and must be stockpiled in the pit area where directed by the Engineer in accordance with the specifications for stockpiling material. The Contractor may be eligible for reimbursement of the production costs of the surplus material up to 110% of plan quantity or as specified by the Engineer.

If more than one source is provided in the special provisions, the Contractor may obtain the material from any of the sources. If the Contractor sets up in a site, and it is found that the quantity of raw materials from that site, when the site is exhausted, is less than that specified by WSDOT, then WSDOT may pay for moving the crushing plant in accordance with the provisions of Section 3-01.3(5) of the *Standard Specifications*. If the new source of material necessitates a longer haul of the materials, WSDOT may also pay for the additional haul as specified.

3-1.7 Pit Evaluation Report

When the Contractor has completed work in a WSDOT furnished material source, the Project Engineer shall prepare a pit evaluation report on Form 350-023. The information contained in these reports is needed to determine the future use of the pit. Also the information is very helpful in preparing plans for future projects in estimating stripping or special requirements that may be necessary to produce satisfactory products.

3-1.8 Contractor Furnished Material Sources

If the Contractor is required to furnish a source of materials or elects to use materials from a source different from those provided by WSDOT, the Contractor shall make arrangements for obtaining the materials and testing the source at no expense to WSDOT. The contractor shall submit Request for Approval of Material, Form 350-071, identifying the source. If sampling is required, the contractor is responsible for providing the preliminary samples which are taken at locations designated and witnessed by the Region Materials Engineer or a designated representative.

Use of the materials from the Contractor's source will not be permitted until after the materials have been tested, the source approved, and authority granted for the use of it. Acceptance of the materials will be based on their meeting the requirements of the specifications at the point of acceptance in Chapter 9-5.3.

If the Contractor has elected to use a source listed in the Pit Site Data Base, and the material has been approved for the intended use, the Project Engineer can approve the Contractor's request. If the Contractor has selected a source not in the Pit Site Data Base, a preliminary sample will be required. The Project Engineer can approve the request based on test results showing the material meets the specifications for which its use is intended.

Before preliminary samples of the materials are taken, the Contractor is required to have done enough testing of the source to ensure the quantity of material available so samples can be obtained which are representative of the material available from the source. The material in the Contractor's source must be of a quality equal to or better than that of the WSDOT provided source if test values are listed in the special provisions, otherwise they must meet the minimum specification requirements. Any surplus screening accumulated during the manufacture of specified material will remain the property of the Contractor.

When measurement is by mass and the specific gravity of the material in the Contractor's source is greater than in the specified source, Section 3-01.4(1) of the *Standard Specifications* require that any additional material required to construct the minimum specified surfacing depth shall be furnished by the Contractor at no cost to WSDOT. The following procedures shall be used to administer the specification:

When the Contractor's source of material has a specific gravity greater than the WSDOT provided source, a variation up to and including 0.05 above the specified source will be considered within the limit of working variation and will not affect course depths by a measurable amount. A variation in specific gravity greater than 0.05 will require a correction item for a credit deduction in treated and untreated items to compensate for the heavier materials. The credit deduction will be based on the following formula.

$$T \times \frac{C - (S + 0.05)}{(S + 0.05)} = D$$

Where T = Gross Mass of Product Furnished in Tons (tonnes)
C = Specific Gravity of Contractor's Source
S = Specific Gravity of WSDOT Furnished Source
D = Credit Mass to be Deducted in Tons (tonnes)

Payment under the item will be made for:

T – D = Net Tons (tonnes)

The preparation, production, and cleanup of the Contractor's material sources shall conform to the requirements of Section 3-01.4 of the *Standard Specifications*. Clearing, grubbing, and stripping are not to be paid for on contractor's sources.

3-1.9 Measurement and Payment

Clearing, grubbing, and stripping WSDOT furnished quarries, pits, plant sites, and stockpile sites are pay items only when they are included as bid items in the contract. The area to be used to obtain material, for plant setup and any necessary stockpiles, shall be staked and measured for clearing and grubbing as specified in Chapter 2-1 of this manual. The area to be stripped must be staked and final ground measurements taken to determine the volume of material excavated. It is important that an area be stripped which is slightly larger than the area required for the material. This will permit stripping additional area without leaving some material to contaminate the pit and it will also prevent working the pit to the edge of the strippings.

Measurement and payment for particular aggregates produced shall be as specified in the appropriate sections of the *Standard Specifications*.

3-2 Stockpiling

3-2.1 General Instructions

Stockpiles shall be constructed in conformity with the provisions of the *Standard Specifications*. The area upon which the material is to be stockpiled is prepared carefully by removing all vegetation and constructing a uniform, flat ground surface. Preparation of a good base for the stockpile will minimize wastage of material, and will prevent contamination of the material when removing it from the stockpile.

The Engineer indicates to the Contractor the location of each proposed stockpile by placing marked stakes at each corner of the area to be used. If the material is to be stockpiled for later use by the Contractor, as in the case of aggregates for bituminous mixtures, the Engineer must consult with the Contractor and locate these stockpiles to conform with Contractor's plans for erecting the mixing plant, etc.

Stockpiles shall be located to ensure easy access by trucks and loading equipment and care must be exercised to see that a sufficient distance is maintained between the various stockpiles so there will be no possibility of mixing the various classes of materials. For all stockpiles, the maximum height is 24 feet (7.5 meters). For stockpiles in excess of 200 cubic yards (200 cubic meters), the material shall be placed in the stockpile in layers not to exceed 4 feet (1.2 meters) in height, and in such a manner that segregation of the fine and coarse portions of the material does not occur. The Inspector must be watchful to see that segregation is held to a minimum. End dumping, dozing material over the side of the stockpile, or allowing material to roll down the slope is not permitted as severe segregation will occur as a result of such procedures.

After completion of each lift of material during the construction of a stockpile, it is common practice to use a pneumatic dozer to level the top of the lift before placing the next layer. This practice may be permitted but the Inspector must see that the operation of the dozer is limited to the minimum amount of work required to level the top of the layer, as excessive operation of the dozer on the pile can result in serious degradation of the material. If it is known that the stone is rather soft and subject to severe degradation under abrasion, the use of dozers on the pile must be prohibited and the pile leveled by hand or other methods which will eliminate the possibility of excessive degradation of product.

It is important to protect stockpiles from becoming contaminated with mud or other material tracked onto the stockpile. If the surrounding ground is wet and soft, or for any reason contaminates are carried onto the stockpile, the Contractor shall provide a means of preventing the contaminates from contaminating the stockpile. This may be by the placement of granular material on the haul routes to keep the equipment tires clean.

When the Contractor is stockpiling two or more classes of materials at the same time, the Inspector must be alert to see that the materials are placed in the proper stockpiles. A few loads of fine screenings inadvertently placed in a stockpile of coarse screenings can destroy or greatly reduce the quality of a large amount of material.

The Inspector is cautioned to be especially alert when stockpiling is being done during hours of darkness to see that all phases of the work are carried out in accordance with the specifications. In many instances, when difficulties are encountered in the use of stockpile material, it is found that the trouble occurred during the night shift when inspection and testing work are very difficult to accomplish in the proper manner. If the Contractor elects to stockpile aggregates prior to use in the immediate work, the requirements of Section 3-02.2(4) of the *Standard Specifications* must be complied with. The Project Engineer's attention is directed to Section 3-02.3 of the *Standard Specifications* for additional requirements for stockpiling certain aggregates.

Some of the important duties of the inspector are listed below:

- See that stockpile area is prepared properly.
- Stake each corner of proposed area for piles.
- Watch to see that material is placed in the stockpile in an approved manner.
- Watch for evidence of degradation or segregation of the material in the pile.
- See that piles are kept separate and are neatly finished.

3-2.2 Measurement and Payment

Clearing and grubbing of the stockpile site are pay items only when they are included as bid items in the contract. The area to be used for stockpiles shall be staked and measured for clearing and grubbing as specified in Chapter 2-1 of this manual.

Measurement and payment of stockpiled aggregates will be in accordance with Sections 3-02.4 and 3-02.5 of the *Standard Specifications*.

3-3 Site Reclamation

3-3.1 General

All surface mines are to be reclaimed in accordance with RCW 78.44 Surface Mining Act and the Contract Reclamation Plan. Section 3-03 of the S*tandard Specifications* covers the requirements for site reclamation.

The intent of site reclamation is to develop an area that remains useful and aesthetically pleasing in appearance after the materials are removed from the site.

Costs involved in complying with the requirements and restrictions imposed by WSDOT, the Department of Natural Resources (DNR), or other agencies in order to comply with the Surface Mining Act do not constitute a basis for additional compensation. Any request for an extension of time resulting from plan approval delays will be considered only if complete and adequate plans were submitted in a timely manner.

To permit positive identification of the pit sites when the various surface mining forms are filled out, the pit site number should be included in the description box in the upper right hand corner of the forms.

3-3.2 Contractor Furnished Sources

Upon completion of seeding and/or planting, Form SM-3 shall be completed by the Operator and forwarded to the appropriate DNR Area Management office.

Sites operating under a valid reclamation permit issued by DNR will not require a plan to be submitted to the Engineer, nor the DNR form, since the Contractor will be corresponding directly with DNR. Evidence of the permit and the conditions contained therein shall be furnished by the Contractor to the Project Engineer. DNR shall perform the inspection and administration of these sites.

Sites with less than 3 acres (1.2 hectares) of newly disturbed land or with walls less than 30 feet (9.15 meters) in height and one to one or flatter slopes, waste sites, and stockpile sites are not surface mines and do not come under the provisions of the Surface Mining Act but must be reclaimed in accordance with the contract plans.

3-3.3 WSDOT Furnished Sources

Contract reclamation plans for sources furnished by WSDOT will normally be included in the contract plans. When this is not done, or when a change to another state source is required, a new plan shall be prepared by the Project Engineer and submitted to the Region Materials Office for review. The Region Materials Office will review the contract reclamation plan to verify that it is in compliance with the DNR Reclamation Permit. The Project Engineer prepares the plan and related papers in accordance with the instructions issued by the Environmental and Engineering Service Center. These instructions are located in Section 460.05 of the *Plans Preparation Manual.*

Upon completion of seeding and/or planting the source, the Project Engineer shall complete the SM-3 form and forward to the appropriate DNR Area Management office for all sites that come under the provisions of the Surface Mining Act.

3-3.4 Reclamation of Stockpile and Waste Sites

Reclamation plans are not required for stockpile or waste sites. However, all stockpile and waste sites are to be graded to the extent necessary to control erosion and provide satisfactory appearance consistent with anticipated future use.

Compliance with the State Environmental Policy Act (SEPA) is required for sites on WSDOT right of way involving more than 100 cubic yards (76 cubic meters) of excavation or landfill throughout the lifetime of the site. For waste sites not on WSDOT right of way, the contractor must comply with the SEPA regulation adopted by the local jurisdiction. Sites involving more than 500 cubic yards (382 cubic meters) of excavation or landfill throughout the lifetime of the site always require compliance with SEPA.

As an assurance of compliance, it is recommended that a site plan for reclaiming stockpile and waste sites be agreed upon by the Region and the Contractor.

In areas where local City or County ordinances exercise control of stockpile or waste sites, the Contractor shall submit copies of the governing agency's permit and evidence of approval by the property owner to the Project Engineer.

In all cases, the Region will be expected to inspect the sites, devoting special attention to aesthetics and ensuring that any diversion of drainage waters due to the wasting or stockpiling operations will not produce any adverse conditions.

P65:DP/CM

Page

4-1 Gravel Base 4-1
4-1.1 General Instructions 4-1
4-1.2 Gravel Base 4-1

4-2 Ballast and Crushed Surfacing 4-1
4-2.1 General Instructions 4-1
4-2.2 Loading, Hauling and Spreading 4-1
4-2.3 Compaction 4-2
4-2.4 Maintenance of Surfacing 4-2
4-2.5 Keystone 4-3
4-2.6 Inspector's Checklist 4-3
4-2.7 Measurement of Quantities 4-3

4-3 Asphalt Treated Base 4-4
4-3.1 General Instructions 4-4

P65:DP/CM

4-1 Gravel Base

4-1.1 General Instructions

Gravel Base is typically used in the construction of the roadway section and provides support for the pavement. A minimum stabilometer "R" value of 72 is required so that the gravel base will be strong and resist displacement. For the pavement to provide a long life, it is important the gravel base be placed uniformly and compacted properly.

4-1.2 Gravel Base

When gravel base is specified in the contract, gravel borrow may be used in lieu of gravel base. When gravel borrow is substituted for gravel base, the gravel borrow shall have a minimum stabilometer value of 67 in addition to the requirements of Section 9-03.14(1) of the *Standard Specifications*. The top 0.10 foot (30 millimeters) of gravel borrow is required to be replaced with 0.10 foot (30 millimeters) of crushed surfacing top course (CSTC). Testing and sampling frequencies will be as required for the material actually placed. The CSTC and gravel borrow used in lieu of the gravel base is measured and paid for as gravel base and not as CSTC or gravel borrow. The inspector should note on the item quantity ticket that the CSTC or gravel borrow is being used in lieu of gravel base. The as-built plans will identify sections where gravel borrow and CSTC were substituted for gravel base.

4-2 Ballast and Crushed Surfacing

4-2.1 General Instructions

Ballast and crushed surfacing is used in the construction of the roadway section and provides support for the pavement. Ballast may be naturally occurring or manufactured, crushed surfacing is a manufactured material. Careful inspection during the manufacturing process to verify the material meets the contract specifications is important so the material will have the properties needed to provide support to the pavement and drain water from beneath it. For the pavement to provide a long life, it is important the ballast or crushed surfacing be placed uniformly to the line, grade, and cross section specified in the plans and compacted properly.

4-2.2 Loading, Hauling and Spreading

The subgrade for the ballast or crushed surfacing is prepared in accordance with the appropriate specifications. Any soft or spongy areas are to be removed or stabilized before the ballast or surfacing material is placed over it.

The *Standard Specifications* require the material to be mixed by the Central Plant Mix Method, the Road Mix Method, or a combination of the two methods. The Central Plant Mix Method mixes the water and material in an approved mixing plant and results in the water being more uniformly mixed into the ballast or crushed surfacing. This facilitates compaction of the material and reduces the potential of segregation which may occur from washing fines out during the application of water or mixing the material on the road. On some projects, the Central Plant Mix Method is the required method.

Ballast and crushed surfacing materials are hauled and placed on the roadway with the equipment and in the manner outlined in the specifications. The objective of the various requirements is that the material be placed in courses of the required depth and in a state of uniform gradation throughout the surfacing courses. When the material is placed with a minimum of segregation, the task of preparing and compacting the course to receive the next lift is greatly facilitated.

It is imperative that the Inspector watch for segregation of materials during all stages of manufacture, hauling, and placement. The design of the roadway section is based on all materials meeting all requirements of the specifications, including gradation requirements. If surfacing materials are deposited on the roadway in a segregated condition, the only corrective measure available is processing of the material on the roadway, using motor graders or other mixing equipment. Excessive processing of material on the roadway is a poor substitute for placement of material in the proper condition in the first place. Therefore, it is very important that every effort be made to ensure correct handling of the materials at all stages of surfacing operations.

Various types of equipment have been developed in order to facilitate placing the required amount of material with a minimum of segregation to the correct cross-section. When the material is mixed with water in a central plant before placing on the roadway with a spreading machine, it can be compacted and shaped to the proper grade and cross-section with a minimum of handling and shaping on the roadway. Some equipment operates from grade control wires to ensure the material is placed at the proper elevation and transverse slope. If this type of operation is proposed to be used by the Contractor, the Inspector should become familiar with the operation and intricacies of the equipment.

Before each succeeding course of surfacing is placed, the Inspector should verify that the underlying course is uniformly graded and compacted properly. The Inspector should also see that each course is finished to a true, smooth profile with no humps or hollows. A good way to locate irregularities in the roadway profile or crown is by careful observation, or eye-balling the grade. Viewing the grade from a prone position or using stringlines between hubs may be helpful. In this way, additional material can be spot-placed to eliminate low and irregular areas, and the material graded and compacted to a true, smooth surface.

It is important the Contractor place the courses of surfacing material in such a manner as to minimize any deleterious effect on the quality of the material already placed which may be caused by the hauling equipment traveling over each course. The placement of the surfacing should begin at the extreme end of the haul and proceed toward the point of loading. In this way, the least amount of hauling over completed courses will be required.

4-2.3 Compaction

Prior to placing any surfacing material, the Project Engineer submits representative samples of each surfacing material to be used on the project to the Regional Materials Engineer sufficiently in advance of the time of its intended use to permit completion of the compaction control test. For each surfacing material, the Project Engineer will receive a Maximum Density Curve worksheet from either the Regional Materials Laboratory or Field Operations Support Service Center Materials Laboratory. This worksheet shows the standard density for all gradations of the tested material as related to the percent passing the U.S. No. 4 (4.75 mm) sieve.

Each layer of surfacing material placed, including gravel base, is to be compacted with approved compaction equipment and checked for compliance with density specifications before the next layer of material is placed. When individual layers are placed to a depth of less than 1 inch (25 millimeters), testing of two layers at one time is permissible. Field in-place density tests are performed in accordance with the test procedures and testing frequencies outlined in Chapter 9 of this manual. A minimum of 95 percent of the standard density as determined by the compaction control test for granular materials is typically required before the next layer of material is placed.

During processing and compaction, the moisture content of the material should be maintained at the optimum water content. The optimum water content is determined by the Materials Laboratory and is listed on the Maximum Density Curve worksheet. Frequent light applications of water rather than periodic heavy applications are preferable as light applications tend to avoid saturation of the surfacing material below the surface. Some projects, typically ones with a large quantity of crushed surfacing, will require the water be added to the surfacing by the central mix plant method. With this method, the amount of water added can be closely controlled and mixed thoroughly with the aggregate. This will result in a material that is uniform both in gradation and water content which will be easier to compact.

If the special provisions require that the surfacing courses be trimmed with an automatically controlled trimming machine, the top of each course of different surfacing courses shall be trimmed to grade and cross-section. The cutting of the surfacing by the trimming machine is controlled by wire lines setup along each side of the roadway. It is therefore important that frequent checks of the wire be made both at the initial setup of the wire and during the trimming operation. This is necessary to verify that the wire has not been disturbed and that the grade will be trimmed correctly. The Project Engineer should be aware that the trimming machines now in use only trim the top surface and do not move material longitudinally from high spots to low areas. The Project Engineer shall see that the materials are placed in reasonably correct amounts and slightly higher than the finished elevations. After completion of the trimming and compaction of the surfacing the finished grade should be checked. Most of the existing trimming machines do a good job of trimming if they are cutting a nominal amount and they tend to chatter and leave an unacceptable washboard surface when operating over a surface that is at or below the finished grade elevation or very hard. On some projects subsequent operations such as concrete paving will also require wire lines and the contractor will typically use the same wire for both operations. The wires for these cases will need to be set far enough out to allow for the operation of the paving equipment. An alternative to requiring trimming machines for some projects is to use motor graders with automatic controls.

4-2.4 Maintenance of Surfacing

Upon completion of the surfacing courses, the Contractor is required to maintain and water the surface if any traffic is allowed to travel upon the roadway. When traffic is heavy, considerable damage can result if maintenance is not performed daily. It is much better to perform frequent light maintenance on a surfacing course than to wait until considerable rutting, pot-holing, and segregation occur in which event heavy processing and blading will be required. Testing for density in the top surfacing course shall be deferred until just prior to commencing paving operations.

The specifications provide that WSDOT may perform routine maintenance of a traveled roadway only in the event of a suspension of work for an extended period, as in the case of a shutdown for the winter.

4-2.5 Keystone

Keystone may be used as needed to provide a tight surface for ballast, gravel base, crushed surfacing base course, or any other surfacing. If the Contractor's operation are such that a considerable amount of coarse rock accumulates on the surface of the completed course that will not compact tightly, keystone may be constructed in accordance with the requirements specified in Section 4-04.3(6) of the *Standard Specifications*. If the contract includes crushed surfacing top course, the Engineer may order the construction of keystone and include the quantity in the measurement and payment of crushed surfacing top course. If the contract does not include the item crushed surfacing top course, approval for adding the item to the contract is required before it may be used. Keystone placed for the convenience of the contractor is paid for at the lower unit contract price for either the base material being keyed or the crushed surfacing top course.

The specifications require that when keystone is necessary that it be placed each day on the course prepared that day. This requirement is especially important when traffic is being carried through the project to protect the course just completed and also to maintain a satisfactory roadway for the traffic. In areas where the pavement is subject to freeze thaw conditions, the use of crushed surfacing top course may not be appropriate if the crushed surfacing top course is frost susceptible. The Regional Materials Engineer should be contacted prior to using crushed surfacing top course in freeze thaw locations.

4-2.6 Inspector's Checklist

Some of the important duties of inspection are listed below:

1. Watch for segregation of material on roadway.

2. Make sure each course of surfacing is properly prepared and meets density specifications before allowing the next course to be placed.

3. When applying water to a surfacing course, see that it is distributed evenly over the entire course. Avoid over-watering which may cause soft spots in subgrade.

4. Make frequent checks of yield to see that the specified quantity of material is placed.

5. See that surfacing courses are completed and compacted true to profile and section. See that humps and sags in the profile are removed.

6. See that surfacing is maintained properly. Should irregularities develop in any surfacing the contractor shall repair the defects prior to placement of the next course.

7. Make depth checks to ensure conformance with the roadway section.

8. Make daily moisture checks on material paid for by the ton (tonne) when excess moisture is present.

4-2.7 Measurement of Quantities

The *Standard Specifications* require that surfacing materials be weighed and paid for by the ton (tonne) or measured by the cubic yard (cubic meter) in the hauling vehicle at the point of receiving the material.

For surfacing materials paid for by the ton (tonne), water in excess of the maximum permissible amounts, as specified in Section 3-01.5 of the *Standard Specifications*, will be deducted from the mass of material to be paid for on a daily basis. The deduction will be determined by the following formula:

Based on dry weight (mass): $D = \frac{T(M - A)}{100 + M}$

where D = daily tonnage (mass) deduction for excess moisture
T = total daily tonnage (mass) over the scales
M = percent of moisture
A = allowable moisture

4-2.7A Measurement by the Ton (Tonne)

Refer to Chapter 10-2.2 for instructions for measuring materials by the ton (tonne).

The following is a list of the scaleman's duties:

1. Keep the Scaleman's Daily Report continually through the day.

2. Check scale for zero at least twice during a day.

3. Tare each truck at least twice a day and enter on tare sheet.

4. Check the scales often and enter in diary.

5. Fill in appropriate spaces on each ticket.

Monitor and adjust tickets for overloaded vehicles.

4-2.7B Measurement by the Cubic Yard (Cubic Meter)

Refer to Chapter 10-2.3A of this manual for instructions for measuring materials by volume, truck measure.

4-3 Asphalt Treated Base

4-3.1 General Instructions

In areas where suitable materials are available, asphalt treated base is an economical method of protecting the subgrade from the weather and lengthening the construction season for paving. If the subgrade becomes saturated after it has been completed, a considerable amount of time is required during good drying weather before it is possible to proceed with construction of the base course. In many instances, construction of ATB to seal the subgrade from rain water is the only way that the subgrade may be satisfactorily completed within a reasonable length of time.

In order to take full advantage of ATB, the specifications require that the subgrade be covered with ATB as soon as 10,000 square yards (square meters) of subgrade has been completed on any roadway which is to receive ATB. This requirement is important, especially when periods of inclement weather are approaching and is not limited to contiguous areas on the project.

When the Contractor is ordered to construct the work under less than favorable conditions, it is incumbent upon WSDOT to pay for repair work which was caused by this prosecution of the work. The Project Engineer should ensure that during this work condition, the areas for which WSDOT would be responsible for repairs are properly defined.

The construction requirements and procedures are much the same as for asphalt concrete pavement except as they are modified in Section 4-06.3 of the *Standard Specifications*. Chapter 5-4 of this manual also applies to the construction of ATB except as modified by the *Standard Specifications*.

P65:DP/CM

Page

5-2 Bituminous Surface Treatment 5-1
5-2.1 General Instructions 5-1
5-2.2 Duties Before Construction 5-1
5-2.3 Inspection of Bituminous Surface Treatment, Class A 5-2
5-2.4 Inspection of Bituminous Surface Treatment, Classes B, C, and D 5-3
5-2.5 Inspection and Sampling of Materials 5-4
5-2.6 Miscellaneous Inspection Duties 5-4
5-2.7 Reports and Records 5-4

5-3 Stress Absorbing Membranes 5-5
5-3.1 General 5-5
5-3.2 Duties Before Construction Begins 5-5
5-3.2A Traffic Control 5-5
5-3.2B Inspection Tools 5-5
5-3.2C Inspection of Contractor's Equipment 5-5
5-3.3 Inspection of Mixing Process 5-5
5-3.4 Inspection of Application and Sampling Materials 5-5
5-3.5 Reports and Records 5-5

5-4 Asphalt Concrete Pavement 5-6
5-4.1 General Instructions 5-6
5-4.2 Inspector Roles and Responsibilities 5-7
5-4.2A Hot Plant Inspection 5-8
5-4.2B Street Inspection 5-10
5-4.2C How to . . . 5-19
5-4.3 Mix Design 5-19

5-5 Cement Concrete Pavement 5-20
5-5.1 General Instructions 5-20
5-5.2 Pre-Pave 5-20
5-5.2A Subgrade Preparation 5-20
5-5.2B Controls 5-20
5-5.2C Equipment 5-20
5-5.2D Mixing Operations 5-21

			Page
5-5.3	Paving		5-22
	5-5.3A	Preparation	5-22
	5-5.3B	Placing	5-22
	5-5.3C	Installing Tie/Dowel Bars	5-23
	5-5.3D	Finishing	5-23
	5-5.3E	Curing	5-24
	5-5.3F	Joints	5-25
5-5.4	Post Paving		5-26
	5-5.4A	Sealing Sawed Contraction Joints	5-26
	5-5.4B	Thickness	5-26
	5-5.4C	Opening to Traffic	5-26
5-5.5	Unfinished Cement Concrete Pavement		5-26
	5-5.5A	Forms	5-26
	5-5.5B	Joints	5-26
5-5.6	Testing Equipment/Reports		5-26
	5-5.6A	Testing Equipment	5-26
	5-5.6B	Records	5-26
5-5.7	Check Lists		5-27

P65:DP/CM

5-2 Bituminous Surface Treatment

5-2.1 General Instructions

Refer to Chapter 5-4.1 for a general discussion of responsibilities and attitude of the Inspector on bituminous paving work.

It is very important that the Inspector on construction of Bituminous Surface Treatment Class A (penetration treatment) and Classes B, C, and D (seal coat) be entirely familiar with the specifications and methods applicable to the work, as construction of these types of surfaces proceeds very rapidly. If the work is begun without proper preparation and planning, it is entirely possible that a major portion of the job will be completed before correction of any improper methods or procedures can be made.

Careful review of Section 5-02.3(10) of the *Standard Specifications* concerning unfavorable weather and calendar cutoff dates should be made well in advance of any bituminous paving work. In no case should bituminous surface treatments be placed before May 15 or after August 15 of any year without review by the Olympia Service Center Roadway Construction Section and written order of the Regional Administrator.

The following table gives the number of gallons (liters) per ton (tonne) @ 60 F (16°C) for the various asphaltic materials. To correct the volume of the material to 60 F (16°C), there are several handbooks that contain tables of temperature volume corrections for the different asphaltic materials.

Grade	Gallons per Ton @ 60 F	(Liters per Tonne @ 16°C
Cutback Asphalts		
70	253	1056
250	249	1039
800	245	1023
3,000	241	1006
Paving Asphalts		
AR 16,000	235	981
AR 8,000	235	981
AR 4,000	235	981
AR 2,000	237	289
AR 1,000	239	998
Emulsified Asphalts		
All Grades	240	1002

When payment for asphaltic materials is by the ton (tonne), they should be measured by weighing. When it is impractical to weigh the materials, the quantity of asphaltic material used may be measured by the gallon (liter) and the number of gallons (liters) converted to tons (tonnes) with the appropriate temperature volume correction.

5-2.2 Duties Before Construction

See Chapter 5-4 for preliminary duties of the Inspector.

Traffic Control

Refer to Chapters 1-2.3 and 5-4 of this manual for instructions concerning preliminary arrangements to be made for control of traffic.

Inspection Tools and Equipment

Before construction begins, the Inspector shall secure from the Project Engineer all equipment necessary to carry out the inspection duties. This equipment shall include air and asphalt thermometers, sieves and scale, tapes and rules, canvas sample sacks, containers for sampling asphalt, notebooks, ticket books and diary book.

Inspection of Contractor's Equipment

Prior to construction of the bituminous surface, the Inspector shall make an inspection of the Contractor's equipment. The Inspector shall check to see that all required equipment is available, and see that the equipment is in good condition and is properly adjusted.

A careful check of the asphalt distributor shall be made to ensure that it meets the requirements of the specifications. The capacity of the distributor shall be determined, and ensure that the volume gauge is calibrated to correctly indicate quantities in the tank.

Special attention should be given to the condition and adjustment of the asphalt pump, spray bar and spray nozzles. The nozzles should be set uniformly at the proper angle from the axis of the spray bar, normally 15 to 30 degrees, to eliminate interference of the sprayed material from one nozzle with that from an adjoining nozzle. Each nozzle should be set at the same angle. The height of the spray bar must be checked to see that the correct overlap of the spray from each nozzle is obtained. This can be accomplished by plugging alternate nozzles and adjusting the height of the spray bar until the edges of the spray

fans from the unplugged nozzles just meet at the roadway surface. When all nozzles are spraying, an exact double coverage of asphalt will be obtained, resulting in an application of asphalt free from longitudinal streaking.

The asphalt pump must be checked to ensure that the required pressure can be maintained uniformly.

The Inspector must check the motor patrol graders, rollers, spreader boxes, etc., to ensure that they are in good operating condition. The Inspector should see that the motor patrols are equipped with the required moldboard brooms. The capacity of hauling trucks and water tanks must be determined from measurement obtained on the job, the results being recorded for future reference.

5-2.3 Inspection of Bituminous Surface Treatment, Class A

Preparation of Roadway

The roadway to be treated shall be processed, shaped and compacted to a smooth, uniform grade and cross-section before application of the asphalt. It is essential that the grading of the surfacing material be uniform over the area to be treated to allow uniform penetration of the asphalt. The quality and smoothness of the finished roadway depends to a great extent on the quality of the work done in preparing the roadway. Careful inspection during this operation will lay the groundwork for a smooth riding and uniform appearing finished project.

In many instances, the surfacing course upon which the bituminous surface treatment is to be placed will be segregated, rutted and pot-holed by traffic using the roadway prior to oiling. Such a surface must be completely processed to the depth of the ruts or potholes, and re-laid. Do not allow the Contractor to merely lightly blade the surfacing course, filling the holes with loose, segregated material. Such procedures are sure to result in a rough uneven pavement, due to differential compaction and penetration.

The surfacing must be thoroughly rolled to obtain a dense, unyielding base for the bituminous surface treatment. A final coverage with the steel-wheeled roller will produce a smooth surface upon which to apply the prime coat.

The blading and rolling of the surfacing shall be coordinated so the asphalt will be applied while the surfacing material is still damp. If the surfacing material compacts to a very tight surface, the asphalt material will not penetrate as much as if the material is more open. If this is the case, the inspector should be careful to not apply too heavy a coat of asphalt.

Application of Asphalt and Aggregate

Immediately prior to starting an application of asphalt, the Inspector should require that the spray bar and nozzles be tested to see that the asphalt will be sprayed properly. The distributor should be placed with the spray bar off the roadway and the nozzles opened so that the spray may be checked visually for evidence of non-uniformity.

Building paper shall be placed at the joint, each time the distributor starts, in a manner that assures a uniform asphalt spread across the area of the joint.

During the application of the asphalt, the Inspector shall maintain a close inspection of the roadway to see that the asphalt is applied in a uniform manner. If any evidence of improper application is apparent, the operation must be stopped at once and required corrections be made to eliminate the trouble. The Inspector must check to see that the asphalt pump pressure and the speed of the distributor are maintained at uniform rates to ensure even application of the asphalt. A record shall be made of each distributor load applied, showing area treated, gallons (liters) spread, temperature of asphalt, etc. The Inspector should compute the yield of each spread in gallons per square yard (liters per square meter).

Part of the prime shot asphalt applied to the surfacing penetrates the material and the rest remains on the surface and surrounds the aggregate, usually $^1/_2$ inch (12.5 mm) screenings. The clean screenings (chips) are used in place of cover stone to promote the venting of volatiles from the cutback asphalt needed for penetration. Constant checking needs to be made to ensure that enough asphalt product is being applied to fill the voids and stick the aggregate. This may change during the day because of weather or the preparation crew's efforts to stay ahead of the oiling crew. Some bleed can be tolerated on the prime shot as it can be corrected on the second (tack) shot if uniform in nature. The final mat will be thicker and better if the maximum amount of asphalt possible, without excessive bleed, is shot on the first (prime) shot. Succeeding shots are placed as seal coats described in Chapter 5-2.4 of this manual.

The stockpiled aggregate shall be inspected to determine the grading of the material, and to see that it is damp at the time of loading onto trucks for hauling to the roadway. If dry or dusty, the material in stockpile must be watered to produce a surface damp condition. The asphalt does not readily coat a dry dusty surface. During good warm weather, the moisture on the surface of the aggregate will quickly evaporate after the aggregate is spread on the asphalt on the roadway.

The Inspector must frequently check the truck loads of aggregate at the point of delivery on the roadway, to see that the trucks are completely loaded and that the material is damp. Tickets shall be issued for each load of material received or a receiving report record made as the loads of material are received and a record made of the quantities of material used on each section.

Following the application of asphalt, the Inspector is responsible for seeing that the aggregate is applied in accordance with the specifications, watching especially

that the aggregate is applied at the correct rate within the time limit allowed. The roadway shall be inspected for signs of skips or omissions in the application of the cover stone and to see that any omissions are immediately covered by hand-spotting methods. The Inspector must not allow excessive amounts of aggregate to be applied, which will only result in waste of the material, and require harmful excessive brooming.

Careful inspection and control of the rolling operation must be made to see that the requirements of the specifications are met. It is important that rolling be conducted as soon as possible following application of the aggregate in order to properly imbed the aggregate in the asphalt.

Chips are broomed the day following the shot because loose chips are of no value in protecting the mat and any loose aggregate on the roadway promotes wheel tracking. Areas of severe bleed will need to be blotted with 1/4-inch (6.3-mm) material during the cure period. Cutback asphalts are curing as long as you can smell the volitiles on a warm day. Emulsions do not really cure except to shed water when they break. Either asphalt will be tender for awhile, although probably ready for the next construction step.

When the asphalt has started to cure and the chances of it bleeding are remote, the excess aggregate on the edge of the roadway should be broomed off as it is a hazard to traffic and reduces the usable width of the roadway.

5-2.4 Inspection of Bituminous Surface Treatment, Classes B, C, and D

Preparation of Roadway

Prior to the application of the seal coat, the Inspector shall see that the existing surface is broomed clean and that holes and breaks are patched as required. The Inspector should inspect the existing surface carefully over the length of the job, noting the surface characteristics of the roadway, so that the rate of application of asphalt best suited to the conditions can be determined. The Inspector should make note of varying conditions and plan to vary the application of asphalt accordingly.

Any areas of the roadway showing failure caused by soft subbase or poor drainage must be removed and the cause of the failure corrected.

If any open or porous surfaces, particularly on recently constructed bituminous pavements, are found in the area to be treated, the Inspector shall require the application of a “pre-seal” treatment to be applied before construction of the seal coat. If this pre-seal treatment is not shown on the plans, the Inspector will inform the Project Engineer of the situation, so that a supplemental agreement may be reached with the Contractor.

The Inspector is responsible to see that a newly constructed bituminous surface be allowed the required time for curing before allowing construction of the seal coat over the affected area.

Construction of Seal Coat

Refer to Chapter 5-2.3 for instructions covering inspection duties during application of asphalt and screenings or cover stone.

In the construction of a seal coat, the quantity of asphalt spread is very critical, due to the thinness of the layer of aggregate placed on the asphalt. Constant checking must be done to ensure that embedment of the major stone in the asphalt is 50 to 70 percent. Where 1/2-inch (12.5-mm) chips are used on routes with moderate traffic volumes, 1/4-inch (6.3-mm) material may be used either ahead of or immediately behind the main rollers. Some bleed is inevitable at intersections, on steep hills, and at severe horizontal or vertical curvature. This is less objectionable than losing rock on long sections in between, due to insufficient asphalt.

The Inspector must maintain continual inspection of the application of aggregate on the freshly spread asphalt, to see that the material is placed within the allowable time. The Inspector must make certain that the spread of asphalt is not extended beyond the area which the Contractor is capable of covering within the allowed time.

Omissions or skips in the spreading of aggregates must be immediately covered by the hand spotting crew.

The best seal coats are obtained on those jobs where the time elapsed between spreading of asphalt and application of aggregates is held to the shortest possible time.

The Inspector must see that the rolling operation is not allowed to lag far behind the spreading of aggregates. It is important that the particles of aggregate be rolled into the asphalt film as soon as possible following application.

Spreading Fine Screenings

When constructing Bituminous Surface Treatment Class B or Class C, the specifications require the application of fine screenings following spreading and rolling of the coarse aggregates. The Inspector must exercise judgment in determining the time for applying the fine screenings. When using emulsions, the fine screenings should be applied immediately, sometimes even before initial rolling.

Fine screenings, applied at the proper time, will key the interstices between the particles of coarse aggregate and provide a smoother riding surface, as well as absorb any free asphalt which might “bleed” to the surface of the coarse particles.

By observing conditions and results carefully, the experienced inspector will determine the procedure producing the best results under any particular condition.

If the sealed roadway is rained on before the asphalt has cured and the asphalt starts to emulsify under the traffic, the roadway can usually be saved from damage by applying fine screenings on the roadway to prevent the traffic from picking up the asphalt.

5-2.5 Inspection and Sampling of Materials

Asphalt

The shipments of asphalt arriving on the job by tank truck shall be inspected by the Inspector. Each shipment must be accompanied by a weigh bill and shipper's certificate. The tank must be inspected after unloaded to see that no asphalt remains in the tank.

The Inspector must check and record the temperature of each load of asphalt delivered to the roadway for spreading.

Samples of the asphalt shall be taken as required in Chapter 9-4.2 of this manual, and shall be submitted to the Olympia Service Center Materials Laboratory for Testing.

Aggregates

No aggregate shall be used without the approval of the Olympia Service Center Materials Laboratory. If material available in stockpile for use on the contract has been approved at some previous date, screen analysis must be made of a sample of the material to see that the material meets grading requirements. If any question arises concerning quality of the material, a sample shall be sent to the Materials Laboratory for testing before use and preferably during plan preparation.

5-2.6 Miscellaneous Inspection Duties

Protection of Structures

When spreading asphalt near curbs, bridge rails, or other structures, adequate protection must be provided to prevent asphalt from splashing or blowing on the structures. The Inspector shall see that any asphalt sprayed on a structure is satisfactorily removed by the Contractor.

Control of Traffic

Frequent checks should be made of traffic control operations to see that traffic is being conducted through the job in a safe, orderly manner. When spreading asphalt, traffic should not be allowed to travel past the distributor. Control of the speed of traffic is very important, especially during the early curing stage of the asphalt, so that the aggregate covering the asphalt is disturbed as little as possible. Control of traffic must be maintained as long as required to prevent excessive pickup and whipping-off of the aggregate. The Inspector must see that all warning signs are properly in place throughout construction. See Chapter 1-2.3 of this manual for further instructions on construction signing.

Maintenance and Finishing Roadway

The Inspector shall see that the newly completed roadway is properly maintained during the required five-day maintenance period. The Contractor shall be required to keep sufficient equipment on the job to adequately handle any situation that may develop. Before the work is accepted, the Contractor shall be required to finish the roadway and clean up any debris resulting from their operations, as required in the Specifications.

Measurement of Stockpiles

Before construction is begun, stockpiles from which materials are to be removed shall be measured and quantities computed. Upon completion of the work, the Contractor shall be required to leave the remaining materials in neat, presentable stockpiles, and the stockpiles shall again be measured and quantities determined. The difference in quantities obtained by this procedure will aid in checking pay quantities determined by truck volumes. It will also serve as an accurate basis for reporting quantities withdrawn from stockpiles.

Notice to Maintenance Superintendent

The Project Engineer should keep the area Maintenance Superintendent informed of the Contractor's proposed progress schedule so that maintenance operations can be coordinated to accommodate the construction work. The Project Engineer must also notify the Maintenance Superintendent of the date when the Contractor's maintenance period will expire so that maintenance of the roadway may be taken over by WSDOT and maintained without interruption. These notices should be given sufficiently in advance to enable the Maintenance Superintendent to provide equipment and organize the work.

5-2.7 Reports and Records

A Daily Report of BST Operations, Form 422-644, shall be made at the end of each day's work, showing type of work, areas treated, quantities used, etc. This report shall be submitted in duplicate for the Project Engineer and Region.

Records of quantities of asphalt and aggregate used shall be kept in the Inspector's notebooks, and shall be checked daily against quantities shown on tickets issued to the Contractor. Accurate, neat records are invaluable to the Project Engineer in preparing estimates and final records. See Chapter 10-2 of this manual for instructions concerning quality control procedures.

The Inspector shall enter in the Inspector's Daily Report all pertinent information concerning each day's work.

5-3 Stress Absorbing Membranes

5-3.1 General

Stress absorbing membranes are seal coats similar to bituminous surface treatments except that paving grade asphalt mixed with rubber is used for the binder. The grades of asphalt allowed are specified in the contract special provisions as are the rubber requirements. The rubber is usually a ground or powdered substance manufactured from used tire carcasses. There are two types of stress absorbing membranes:

(1) SAM; a stress absorbing membrane used as the finish wearing surface of the roadway.

(2) SAMI; a stress absorbing membrane interface used between an existing roadway surface and a new layer of asphalt concrete to prevent existing cracks from reflecting through to the new surface.

5-3.2 Duties Before Construction Begins

See Chapter 5-4 of this manual for preliminary duties of the Inspector.

5-3.2A Traffic Control

See Chapters 1-2.3 and 5-4 of this manual for traffic control arrangements.

5-3.2B Inspection Tools

Before construction begins, the Inspector should gather together the tools needed to perform inspection duties: the equipment required includes air and asphalt thermometers, sieves and scale, tapes and rules, sample sacks, quart cans for sampling asphalt, notebooks, forms, ticket books, and diary book.

5-3.2C Inspection of Contractor's Equipment

Section 5-02.3(1) of the *Standard Specifications* details the equipment requirements. In addition, self-propelled power brooms will be required to clean the existing pavement. The only rollers allowed will be self-propelled with pneumatic tires. The Inspector should also review Chapter 5-2.2 of this manual.

5-3.3 Inspection of Mixing Process

There are two mixing processes currently being used. The specifications for both processes require that the asphalt and rubber be combined in the proportions of two pounds (one kilogram) rubber to one gallon (4.2 liters) of asphalt. The Inspector must determine the percentage by mass of the asphalt and rubber incorporated into the mixture. When a diluent is used, it must have a boiling point of at least 250 F (176°C) and should be mixed as rapidly as possible when introduced to the asphalt along with the rubber. The other process utilizes an extender oil, with the mixture then being heated to 400 F (205°C).

5-3.4 Inspection of Application and Sampling Materials

The following application procedures are used for SAMs and SAMIs.

(1) The existing surface is cleared and patched as required by Section 5-04.3(5)A of the *Standard Specifications*. Existing cracks 1/4 inch (6 mm) or larger should be filled before application of stress absorbing membranes. The use of a power broom is required.

(2) The hot rubber mixture is applied at a rate of 0.50 gallons (2.25 liters) plus or minus 0.05 gallons (0.2 liters) per square yard (meter) dependent upon the absorption of the mixture into the existing pavement, surface texture of existing pavement and absorption of the mixture into the cover stone.

(3) Aggregate spreading *must* start within 15 seconds after application of the hot rubber mixture. The amount of aggregate spread is 25 to 40 pounds (13.5 to 22 kilograms) per square yard (meter) for a SAM. The SAMI will be overlaid with a course of asphalt concrete pavement, therefore only the minimum amount of aggregate needed to protect the membrane from equipment is needed. This is estimated to be 25 pounds (13.5 kilograms) per square yard (meter). If preheated aggregates are used they should be kept at specification temperature or slightly above or there will be problems with the spreader belts elongating.

(4) Rolling is started immediately following the aggregate spread. At least four complete passes are required to imbed the aggregate in the hot rubber mixture. A 25-ton (22-tonne) roller is desirable for best results.

(5) If traffic is to be allowed upon the fresh surface and precoated aggregate is used, then an additional layer of aggregate, 1/4 inch-0 (6.3 mm-0), may be required after rolling. The aggregate would be applied at a rate of 5 to 10 pounds (2.7 to 5.4 kilograms) per square yard (meter). If the aggregate embedment is less than 50 percent, a fog seal is recommended. Also, discontinue the application of 1/4 inch-0 (6.3 mm-0).

(6) Samples of the rubber and asphalt mixture shall be taken as required in Chapter 9 of this manual, and shall be submitted to the Materials Laboratory for testing.

5-3.5 Reports and Records

Same as Chapter 5-2.7.

5-4 Asphalt Concrete Pavement

5-4.1 General Instructions

The technology of asphalt materials and mixes is continuously changing. It is imperative to study contract documents and specifications prior to the start of any paving contract. There also are many excellent handbooks that can be obtained to assist paving inspectors and testers. It is recommended that Project Engineer's obtain copies of these handbooks. A recommended handbook is "Hot-Mix Asphalt Paving" by the US Army Corps of Engineers.

Good work and a successfully completed job depends on good equipment, skillful operation of the equipment, competent, knowledgeable supervision and inspection, and open lines of communications. Maintaining open lines of communication through informal daily meetings between the project inspector and contractor, can greatly improve the success of any job. Asphalt paving projects, are not always built as originally scheduled. Changes may occur because of material supply, equipment breakdown, contractor and subcontractor schedules, and weather conditions. Informal meetings on a regular basis provide a forum for the exchange of information and discussion of problems. To begin the communication process a pre pave meeting is recommended. The Project Engineer, paving inspectors and testers together with Contractor superintendents, foremen, screed operators, rakers, roller operators and plant operators should be present to go over all activities and plan the entire operation. It is also advisable to include traffic control personnel. The following check list may be used as an outline for the pre-pave meeting:

Pre-pave Check List

1. Verify with Contractor what mix design will be used and inform the Contractor what the starting point for asphalt content will be.

2. Go over procedures for modifying mix designs.

3. Discuss construction of test sections to determine mix compactibility and utilization of the test section for rolling patterns.

4. Go over the procedure and timing in obtaining density gauge correlation factors.

5. Discuss the communication procedure to be used for weather shut downs, use of mix in trucks and silos, and other potential construction problems.

6. If material transfer equipment is used what is to be done when breakdowns occur.

7. Discussion of what to do if segregation of the mix is occurring.

8. Discuss use of tack such as application rates, pickup problems and problems with rain.

9. Go over asphalt densities: Who, When, and How, notification of results, request for cores, and utilization of core results.

10. Mix sample and testing: Who, When, and How, notification of results, composite pay factors, and Contractor's use of challenge test specifications.

11. Obtain a copy of the temperature-viscosity curve for the type(s) of asphalt cement being used on the project. This will normally be available from the manufacturer of the asphalt cement.

12. Traffic control procedures and lines of communication.

13. Other factors specific to Contract or of concern by those attending.

In the construction of asphalt concrete pavement, it is extremely important that the plant-mixed material meets all requirements of the specifications. It should be remembered that specifications are not arbitrarily arrived at, but have evolved through the years as a result of experience and research.

Experience has shown that pavements which do not meet all specifications will not perform satisfactorily, resulting in high maintenance costs. The responsibility for obtaining a mixture in close conformance with the project mix design and meeting the specification requirements rests with the Contractor. The importance of this cannot be overemphasized, since the best possible construction at the lowest cost to WSDOT cannot be obtained unless the mixture produced at the plant is uniform and of good quality. The key word used to describe quality production of asphalt mixtures is UNIFORMITY.

- The aggregate in the stockpile must be of UNIFORM quality and gradation;
- Aggregate must be fed into the plant in a UNIFORM, controlled manner;
- The heating and drying of the aggregate must be UNIFORM;
- The separation of the aggregate in the bins must be UNIFORMLY controlled;
- The aggregates and asphalt must be combined and mixed in a UNIFORM, consistent manner.

In order to achieve this uniformity of quality, it is necessary that the entire operation be conducted so that each phase of the production operation is in balance with all other phases.

With the advent of Quality Assurance (QA) specifications, the role of inspection has evolved from one that was highly involved in the operation of the asphalt plant to one that is more involved in verification that the material the Contractor produces is in conformance with the mix design and in accord with the specifications. However, it is still important that the Inspector be knowledgeable in the working of asphalt plants and the effect that adjustments or maintenance of the plant operations can have on mix quality and consistency.

Various testing procedures are available to ensure that the component materials and the completed mixture meet the requirements of the specifications. However, since only relatively small samples of each day's production can be tested, inspection duties and responsibilities involve more than merely performing the required tests. Inspectors and testers must be familiar with the working of the asphalt plant. The Contractor is responsible for the uniform application of plant controls so that the end product is of uniform quality. Only when the product is uniform can samples be considered representative of the material produced. The Inspector, through communications and observations of plant operation, can work with the Contractor to assure that the mix is being produced uniformly. If problems are observed, the plant foreman should be notified and be responsible for making the necessary corrections. If violations or misunderstanding of the specifications arise that cannot be promptly settled, the Project Engineer must be notified immediately.

Instructions in all cases shall be issued to the Contractor's designated representative rather than the workers. A diary must be kept, showing all instructions received from the Project Engineer and instructions issued to the Contractor.

Careful review of Section 5-04.3(16) of the *Standard Specifications* concerning weather limitations and calendar cutoff dates should be made in advance of any asphalt concrete paving work so that paving can be planned and completed prior to any unfavorable weather. Pavement performance is as dependent on the weather conditions in the first weeks and months following paving as it is on the weather conditions on the day of placement. Invariably, when these specifications are not closely adhered to, early pavement performance problems occur. Therefore, between October 15 and April 1, no wearing course is to be placed without written approval of the Regional Administrator. The Project Engineer field staff will typically provide input to this decision by the Regional Administrator.

In addition, use of a pneumatic tired roller is required from October 1 to April 1. It has been shown that during warmer weather, traffic will knead the asphalt pavement providing a more durable pavement. To duplicate this benefit for late season paving, use of pneumatic tired rollers is part of the specifications. Placement of open graded mixes or dense graded mixes of 0.10 foot (30 millimeters) or less is not recommended between September 1 and April 1. Heat loss in thin lifts is very quick and in most cases inadequate time is available for placement or to achieve needed compaction

5-4.2 Inspector Roles and Responsibilities

Testing Equipment

Before production commences, the Inspector needs to ensure that all of the necessary equipment that will be needed to accomplish all of the test procedures has been obtained. In addition, chapter 9-8 lists the equipment that needs to be calibrated or verified. The Inspector needs to make sure that this equipment is in good working order and has a current calibrated or verified sticker on it.

The Inspector is charged with responsibility for care and safekeeping of all testing equipment which is issued. The equipment must be maintained in a clean and proper operating condition to ensure accuracy of test results. Special care must be exercised in the use and maintenance of sieves to see that they do not become clogged or damaged. Thermometers must be handled carefully to avoid breakage.

Electronic scales are expensive, desirable, and delicate equipment. Particular care should be taken to protect them from theft or voltage spikes.

The ignition furnace is a high temperature oven, care must be exercised in it's operation and testers must be certified in its use.

Given reasonable care, asphalt concrete testing equipment will give long and satisfactory service.

Required Tests

The Project Inspector is responsible to the Project Engineer for the required field tests as well as for submission of required samples to the Materials Laboratory for testing. Testers must be qualified in the "Asphalt Module" or for the particular method of sampling and testing they will be performing. It is the intent of QA specifications that the Contractor be made totally responsible for the maintenance and operation of equipment and the production of the asphalt concrete. It is the Inspector's role to sample and test the material to assure that WSDOT is getting a uniform and specification product. However, it is not possible or desirable for the WSDOT Inspector to take a "hands off" approach to the production of asphalt concrete. If the Inspector notices anything at all that affects the quality of the asphalt concrete, this information should be brought to the Contractor's attention in a cooperative manner so that the situation can be corrected.

5-4.2A Hot Plant Inspection

Plant Inspector's Check List

Some of the most important details of inspection on asphalt plants are listed below:

1. See that testing tools, equipment, and samples are on hand at the plant site and in good condition. Make sure you understand all tests.

2. Inspect all components of the asphalt plant; make sure all deficiencies are corrected *before* production is begun.

3. Verify that all proportioning and weighing scales are currently certified in accordance with Section 1-09 of the *Standard Specifications*.

4. Post mix designs, including all revisions.

5. See that stockpiled aggregates are kept separate; see that no intermingling occurs at cold feeders unless single stockpile is used.

6. See that cold aggregate feeder gates are being monitored and that cold aggregates are feeding continuously.

7. Watch for evidence (dark smoke from plant exhaust and oily coating of aggregate) of incomplete combustion of burner fuel.

8. Check frequently the temperature of the asphalt and volume accumulation from flow meter.

9. Observe plant operator occasionally to see that correct weights and proportions are obtained, including asphalt content.

10. Make frequent visual inspections of mix leaving plant for evidence of non-uniformity or incomplete mixing.

11. Check temperature of mix frequently.

12. Inspect truck beds before loading; see that bed is free of congealed chunks of mix and excess bed release agent.

13. Check frequently with Street Inspector concerning workability and uniformity of mix at the paving machine and density test results.

14. Take samples of mix for field tests and submission to laboratory.

15. Make accurate, complete record of all test results, asphalt used, and other pertinent data.

16. Have copies of all test reports available for review.

17. Fill out the required daily reports.

18. Keep in constant communication with the plant foreman and the street inspector and give immediate notification regarding any problems.

Field Tests

On all projects involving asphalt concrete, job site samples shall be obtained, tested, and recorded in accordance with the *Standard Specifications*, the contract special provisions, and Chapters 9 and 10-3.5 of this manual. A split of the field sample will be retained by the field tester for further testing if necessary. This sample may be used when test results are challenged by the Contractor per *Standard Specification* 5-04.3(8)A. Asphalt content of the mix shall be determined by use of the Ignition Furnace in accordance with AASHTO T308, and gradation determined in accordance with WAQTC FOP for AASHTO T30.

Samples Required by Materials Laboratory

When taking a sample of the mixture for mix design conformation, a sufficient quantity of the mix should be obtained so that a portion of the same sample may be submitted to the Materials Laboratory for testing. Samples shall be taken as provided in Chapter 9 of this manual and forwarded to the Materials Laboratory in the amounts and at intervals therein specified.

Sampling Methods

Samples of the complete asphalt mixture should be taken from the hauling conveyance in accordance with the current test method and quartered down to the desired size for testing. Remember that the value of material quality testing is dependent on exact parallel tests of identical splits from representative samples.

Verification of the Ignition Furnace Calibration Factor

The Project Engineer shall verify that the "Ignition Furnace Calibration Factor" shown on the asphalt mix design is valid. The verification of the "Ignition Furnace Calibration Factor" shall be determined in accordance with current test methods and should be done prior to beginning the production of any paving mixture using initial mix design. The verification shall be done using the furnace which will be used for acceptance testing. In some circumstances it may be necessary to use production data to verify acceptance results but should be only utilized when all verification procedures have been used and validated

5-4.2A(1) Inspection of Mixing Plant

Project Inspectors should familiarize themselves with plant operations prior to beginning of paving. A visit to the plant will do this and additionally provide an opportunity to inspect the plant for conformance to WSDOT specifications. Specification violations should be brought to the attention of Contractor so they may be corrected prior to beginning paving.

When doing plant inspection, particular attention should be given to examination of gates, feeders, drier and dust collector, screens and bins, pugmill, and all thermometers,

pyrometers, and weighing scales. To assist in this inspection, one of the previously recommended hot mix asphalt paving handbooks will provide excellent guidance. In addition, the manual from the WSDOT Asphalt Concrete Testing Procedures training class provides an excellent resource.

With the increased emphasis on aggregate structure and void content, it may be necessary for the Contractor to use multiple stockpiles.

Allowable methods of heating the asphalt are stated very clearly in the specifications, and the limits of the range of application temperatures are also specified. An asphalt thermometer is required to be installed in the asphalt line. This thermometer should be checked for accuracy before work starts. Close control of variations in temperature of the asphalt cement is very important, as overheating of asphalt oils will cause hardening and may cause substantial decrease in pavement life. When using modified Performance Graded (PG) asphalt, the asphalt manufacturer may recommend a higher mixing temperature. The Project Engineer may approve of increasing the mixing temperature, in accordance with the manufacturer's recommendation, as allowed in the *Standard Specifications*.

Section 5-04.3(1)A of the *Standard Specifications* requires that a valve be placed in either the asphalt supply line to the mixer or the storage tank for sampling the asphalt. This valve should provide a safe method of obtaining samples of the asphalt material which are representative of the material being incorporated in the mixture. All samples must be taken in the Inspector's presence. If for any reason the asphalt oil is suspected to have become mixed or contaminated in the storage tank, additional samples from the asphalt supply line should be taken and noted on sample submittals.

During the preliminary inspection of the asphalt mixing plant, the Inspector should note any violation of safety rules concerning machinery safeguards, such as lack of guards on belts, sprockets and the like. The Inspector should call to the attention of the Contractor any such violations and request that corrections be made. If the violations directly affect the functions of the engineers and inspectors, the Project Engineer should refuse to allow mixing to begin until conditions are safe for sampling, inspecting, etc. Section 1-05.6 of the *Standard Specifications* requires the Contractor to provide safe facilities for inspection of the plant and the work.

5-4.2A(2) Inspection During Mixing Operations

After the mixing begins, and throughout the day, the Project Inspector working with the qualified tester shall make the required tests of the mixture. It is very important, however, that the Project Inspectors and testers spend some of the time observing the operation of the plant and the condition of the mixture being produced. Changes in the mixture can quickly be detected by observing changes in appearance or color of the mixture.

Periodic checks of the temperature of the liquid asphalt, as well as the mixture produced must be made to ensure that maximum allowable temperatures are not exceeded and a uniform material production is being produced. The Contractor will choose the desired temperature of the mixture within specification limits, depending on weather conditions, length of haul, and other factors. Project inspectors should watch for excessive variation in temperatures, and notify the contractor of any variation that occurs. Variable temperatures of the mix may cause compaction and segregation problems and close monitoring of temperatures is an essential part of asphalt concrete paving.

When stockpiled aggregates contain a high percentage of moisture, difficulty may be encountered in heating the material to the proper temperature. In some cases, the contractor may try to correct this condition by increasing the amount of fuel oil fed to the burner. This can be done satisfactorily until incomplete combustion of the fuel oil occurs. Black smoke coming from the exhaust stack is an indication that incomplete combustion is occurring. Black smoke is also a sure sign that air quality standards are being violated. The Inspector should watch for this condition, as the unburned fuel will deposit a sooty, oily film on the aggregate particles which is detrimental to proper coating of the material with the asphalt film. A reduction in the amount of cold aggregate fed to the drier will usually correct the situation and allow proper heating and drying of the material.

Frequent inspections of the condition of the mixture leaving the plant should be made, noting the consistency of the mix, the distribution of asphalt and aggregate throughout the mixture, and the temperature of the mixture. Trucks should be loaded by multiple dumps of three or more as recommended by NAPA. If the quality of the mixture varies from truck to truck, an immediate check should be made to locate the source of trouble. Uniform distribution of the asphalt throughout the mix is extremely important. If portions of each truck load varies from rich to lean, the Inspector shall advise the Contractor to correct the problem. It may be necessary to increase the mixing time to correct this situation. By examining the mixture in bright light, the experienced Inspector can quickly detect non-uniformity in the mixture.

5-4.2A(3) Miscellaneous Duties of the Plant Inspector

One of the duties of the Plant Inspector may be to oversee the work of the scale person on truck weighing scales at the plant, and see that the required tests of the scales are performed. The Inspector must see that tickets are properly

made out and issued for each truckload of mixture delivered, and shall also seethat daily totals are promptly obtained and entered on the daily report.

Before trucks are allowed to be loaded at the plant, a check shall be made to see that the truck beds are properly lubricated as required in the specifications. No pools of bed release agent shall be allowed to remain in the truck bed following this operation. The truck bed should be raised to allow any excess material to be drained off.

When the Contractor is using a site furnished by WSDOT, the inspector should see that the Contractor shapes up any remaining aggregate into neat stockpiles, and removes all debris from the plant site when the project is complete.

5-4.2B Street Inspection

General

In the construction of asphalt pavements, it is the responsibility of the Street Inspector to see that construction methods and equipment used, as well as the finished pavement, meet the requirements of the specifications. In order that the Inspector may properly discharge this responsibility, it is necessary that the Inspector thoroughly understand the *Standard Specifications*, the special provisions of the contract, and the instructions set forth herein. The Inspector must also have a good working knowledge of methods and equipment involved in the construction.

A means of communication between the Street Inspector and the Plant Inspector must be established, and the Street Inspector shall keep the Plant Inspector informed of any difficulties encountered in the laying of the mixture or of any faulty mixture received at the paving site.

Street Inspector's Check List

Some of the most important details of inspection on asphalt paving are listed below:

1. Check condition and adjustment of paving machines and rollers.

2. Has width of spread in successive layers been determined?

3. See that traffic control is organized and functioning properly; make sure required signs are in place and document same.

4. Check application of tack coat; do not allow tacking of more base than will be paved each day. Be sure that the pavement is swept and clean ahead of the tack application.

5. Examine pavement base, see that required patching and/or pre-leveling is done. Do not be afraid to get the front of your shirt dirty; do a lot of "belly-grading." Make a check of surfacing depths before paving begins.

6. See that paver guidelines are set and adhered to.

7. Check transverse joint for smoothness and appearance.

8. Watch trucks dumping into paver hopper for adverse effect on paver operation. Pay particular attention to constant uniform paver speed and minimum operation of the hopper wings.

9. Check temperature of mix occasionally and watch for evidence of incomplete mixing.

10. Maintain constant inspection of mat behind paver for signs of roughness or non-uniformity of mixture.

11. See that longitudinal joint is raked and compacted properly.

12. Make frequent checks of yield and depth.

13. Watch rolling operation; see that the established rolling pattern is used; watch for variation in speed of rollers and correct. See that nuclear density readings are maintained. Check internal temperature of mix to verify that vibratory rolling is not used below 175 F (79°C).

14. Keep record of truckloads used each day; check with Plant Inspector concerning masses.

15. Make sure the job is in good shape before you leave at the end of the day and see that any excess paper is trimmed from the transverse night joint.

5-4.2B(1) Duties Before Paving Begins

The Street Inspector is a key participant in the pre-pave meeting and typically oversees all aspects of the operation at the jobsite. The street inspector should be knowledgeable as to the project limits, hours of operations, the direction in which paving is to proceed, methods of performing any unusual features of work peculiar to the project, proposed traffic control methods, etc. The plan of operation agreed upon at the pre-pave meeting should be followed faithfully whenever possible.

Traffic Control

The Contractor shall conform to the requirements of Section 1-07.23 of the *Standard Specifications*. The Project Engineer and the responsible inspector must work closely with the Regional Traffic Engineer and the Contractor to ensure that the proper signs are placed in the best possible manner. All applicable signs shall be installed on the job before paving begins. Chapter 1-2.3 of this manual includes additional sign installation details.

Inspection Tools

Before paving work begins, the Street Inspector must see that all tools and equipment necessary for the inspection work are available. These would include such things as

surface and probe thermometers, tape measure, depth gauge, tire pressure gauge, 10 foot (3 meter) straightedge, notebooks, diary, report forms, ec.

Inspection of Paving Equipment

It is the duty of the Street Inspector to inspect the Contractor's paving equipment, checking the condition and adjustment of the component parts of the paving machines and rollers. In order that the best possible surface finish will be obtained, it is essential that all machines be in good conditio and all parts be in proper adjustment. All equipment, including trucks, should be checked for hydraulic and fuel leaks when systems are under pressure. By making this inspection prior to the beginning of paving operations, obvious deficiencies in the condition of the equipment may be discovered and corrected, thus avoiding delays once the work is under way. The Contractor must not be allowed to begin work until the Inspector is satisfied that the equipment is in good operating condition.

Listed below are some of the most important details the Inspector should check during the inspection of paving equipment:

(a) Paving machines. Several types and makes of paving machines are in use in this State, all of which are capable of producing satisfactory surface finishes. The differences between types of paving machines are primarily in the methods used in striking off, compacting, and smoothing the mixture. The Inspector must be familiar with the mechanical features of the type of paver to be used on each job, so that an intelligent appraisal of the condition and adjustment of the machine can be made. Handbooks of operating instructions are available from each manufacturer, in which the various adjustments and operating details are shown. The Inspector should obtain copies of these instructions from the Contractor or the manufacturer.

Paving machines using a vibratory screed to strike off, compact, and smooth the mixture must be checked to see that all vibrators are set to deliver vibrations of equal amplitude and frequency. The screed plate should be checked for signs of excessive wear, and engine speed determined to ensure correct adjustment of the governor.

Any extensions that are added to the paving machine should be checked to make sure they have the same equipment as the rest of the paver. Most newer paving machines will be equipped with automatic screed extensions. Regardless of whether the screed extensions are automatic or bolted on, sufficient auger must be added to properly distribute the mix without segregation.

On all track paving machines, correct adjustment of the track linkage is essential for smooth operation. A poorly adjusted track, or a badly worn one, can produce an uneven, lurching movement in the travel of the machine which will be reflected in an uneven, "choppy" pavement surface. Observation of the machine in motion will usually show up any defects in the track or drive mechanisms.

Some pavers are suspended on rubber-tired wheels. With these machines, all tires must be inflated to the correct pressure, and the drive system must be examined to see that it is without slack.

(b) Rollers. Steel-wheeled rollers must be inspected to determine that the wheels are capable of rolling a true plane and are in good condition. The Inspector should be especially watchful for flat spots on the wheels. The steering and driving mechanisms must be free of excessive play or backlash. Observation of the roller in motion and reversing direction will disclose any deficiencies in the drive and clutch mechanisms. The maximum rate of travel shall be limited to 4 mph (1.75 meters per second).

Vibratory rollers must have at least two amplitude settings and the minimum capability of 2,000 vibrations per minute at any speed. The maximum rate of travel shall be limited to 3 mph (1.3 meters per second).

Pneumatic-tired rollers, to function properly, must have tires of equal size and in good condition. All tires must be equally inflated, so that all exert equal unit pressure on the pavement. Tire pressures may be varied to suit conditions on the job, but, in general, should be such that ground contact pressures range between 40 and 80 psi. The Inspector should observe the roller in motion to see that all wheels are rolling true, without wobble or creep. See Figure 5-1. The maximum rate of travel shall be limited to 5 mph (2.2 meters per second). Pneumatic tired rollers shall have full skirts as the tires must be warm to prevent "picking." (When the cool tires roll over the hot ACP mix, the mix tends to stick to the tires, and is "picked" up from the mat onto the tires.)

(c) Miscellaneous tools. A check must be made to see that the Contractor has an adequate supply of rakes, lutes, shovels, brooms and other small tools available on the job. The Inspector should be satisfied that the Contractor is properly equipped with portable barricades, cones, or other means of protecting the freshly laid pavement from damage by traffic.

Upon completion of the check of the paving equipment, the Street Inspector should call any deficiencies or maladjustment of equipment to the attention of the Contractor, so that correction can be made before the work begins.

Preleveling

The Engineer must give careful consideration to the use of a preleveling course over areas of unusual roughness, wheel ruts, or sags in the profile of the pavement base.

The Contractor should be given as much advance notice as is possible of the intent to place a preleveling course. The areas that need prelevel should b marked out and reviewed with the contractor prior to the pre-pave meeting. The extent of prelevel and the methods to be used should be discussed at the pre-pave meeting.

One method used for preleveling may be using a motor patrol grader. A paving machine may be used when the Engineer has determined that better results can be obtained by this method and particularly where long undulations occur. When conditions warrant, a reference line may be erected for preleveling and a long multi-footed ski-type reference should be used for placement of subsequent pavement courses. Ruts can be economically preleveled by dragging a paver screed. Because of the possible detrimental effect on the equipment, it should only be done with the consent of the Contractor or if required by the plans. In order to outline areas and amount of preleveling, the Contractor should be encouraged to erect a single reference line along the crown point for the first pass. The practice of directly marking depths and limits of preleveling required on the pavement surface is considered beneficial.

The nominal compacted depth of any layer of any course, including preleveling lifts, shall not exceed the depths outlined in the *Standard Specifications* for the class of mix being used. The purpose of this requirement is to reduce the differential compaction which takes place and to ensure adequate compaction of thick lifts between two humps. Compaction should be accomplished with a pneumatic roller.

To produce a satisfactory riding surface, preleveling, in theory, should continue regardless of quantities until a uniform lift of asphalt concrete can be placed by paving machines with the multi-footed ski-type reference. If it appears that the plan quantity of prelevel must be exceeded due to the condition of the existing pavement, the situation should be immediately brought to the attention of the Project Engineer, and the Region Construction staff. The Engineer must take care to clearly distinguish between preleveling operations and paving operations, especially leveling courses.

Preparation of Untreated Roadway

Section 5-04.3(5)B of the *Standard Specifications* covers the work of preparing the untreated roadway quite thoroughly. When the roadway is carrying traffic, public or construction, it is usually necessary to construct the prime coat treatment to maintain the roadway to the desired line, grade and cross-section until the first course of pavement is constructed. If there is no traffic problem, it may be desirable to eliminate the construction of the prime coat treatment.

Weather conditions must be satisfactory for construction of the prime coat treatment and the prime coat must be allowed to cure for a minimum of 5 days before proceeding with paving. When the weather limitations cannot be met or the minimum curing period would present a hardship and it is desirable to pave the roadway, elimination of the prime coat should be considered.

5-4.2B(2) Duties During Paving Operations

Prior to beginning of paving work each day, the paving equipment shall be checked for adjustment and condition. The Inspector shall see that guidelines are set for the day's work, that the base is properly prepared, and that the tack coat has been applied through the area to be paved during the day. It is not a good practice to apply the tack coat over more area than can be paved in a day or an hour or two if the weather appears to be questionable. Traffic conditions may also dictate how far the tack coat should be placed ahead of the paving operation.

The specifications require an application of tack coat from 0.02 to 0.08 gallons (0.1 to 0.35 liters) of retained asphalt per square yard (meter). For pavement of normal thickness, less than 0.05 gallons (0.23 liters) per square yard (meter) should be adequate. Thin lifts of pavement and open graded mixes such as Class D require heavier applications of tack coat to prevent raveling, spalling, and delamination. As a guide, existing surfaces that are coarse, dry or milled require a higher application rate of tack coat than surfaces that appear rich or bleeding.

Joints

The *Standard Specifications* provide that butt joints be constructed. The use of heavy paper is recommended to form the butt joint at the end of the day's work, with a temporary ramp laid on the paper beyond the joint to assist traffic over the change in elevation. Paper protruding above the pavement shall be carefully trimmed flush with the pavement so that there will not be an illusion of a hazard a night. When the ramp and paper are removed prior to beginning the succeeding day's paving, a well-constructed joint will require a minimum of cutting back to form the required butt joint. When hand raking is performed on a joint, all segregated coarse aggregate shall be removed, to avoid a coarse, porous surface at the joint.

If the roadway is open to traffic, the transverse joint must be feathered to provide a smooth transition for the traveling public and joints between successive lifts in each lane should not be less than 100 feet (30 meters) apart. The higher the speed on the roadway, the longer the taper on the joint must be to provide an acceptable transition.

Certified Max. Ground Contact Pressures
Smooth Tread Compactor Tires
Issued by
Bituminous Equipment Manufacturers Bureau

	2000	3000	4000	2000	3000	4000	2000	3000	4000	2000	3000	4000	Wheel Load
7:50 x 15	50	50	50	60	60	60	70	70	70	90	90	90	TIP
10 ply	46	53	57	56	65	68	60	67	73	67	75	82	GCP
7:50 x 15	50	50	50	70	70	70	90	90	90	110	110	110	TIP
12 ply	53	60	66	60	69	75	69	77	84	75	83	89	GCP
7:50 x 15	50	50	50	70	70	70	90	90	90	110	110	110	TIP
14 ply	59	66	71	65	73	79	72	80	86	78	87	94	GCP

	2000	4000	6000	2000	4000	6000	2000	4000	6000	2000	4000	6000	Wheel Load
9:00 x 20	35	35	35	50	50	50	75	75	75	90	90	90	TIP
10 ply	48	55	58	53	62	66	64	75	81	68	82	88	GCP
9:00 x 20	35	35	35	50	50	50	75	75	75	90	90	90	TIP
12 ply	47	55	57	53	61	66	64	75	81	68	82	88	GCP
9:00 x 20	35	35	35	75	75	75	90	90	90	105	105	105	TIP
14 ply	42	49	55	57	68	74	62	74	81	67	81	89	GCP
9:00 x 20	35	35	35	75	75	75	90	90	90	105	105	105	TIP
16 ply	40	50	57	57	68	75	64	75	82	69	81	89	GCP
10:00 x 20	35	35	35	70	70	70	85	85	85	100	100	100	TIP
14 ply	40	48	53	51	60	66	56	66	71	61	72	77	GCP
10:00 x 20	35	35	35	70	70	70	100	100	100	125	125	125	TIP
18 ply	40	48	54	51	60	66	61	72	78	67	80	87	GCP
11:00 x 20	35	35	35	50	50	50	70	70	70	90	90	90	TIP
14 ply	42	47	51	45	51	58	54	63	70	68	75	82	GCP
11:00 x 20	35	35	35	70	70	70	90	90	90	105	105	105	TIP
16 ply	42	47	51	54	63	70	68	75	82	69	83	88	GCP
11:00 x 20	35	35	35	70	70	70	90	90	90	105	105	105	TIP
18 ply	42	47	51	54	63	70	68	75	82	69	83	88	GCP

	4000	6000	8000	4000	6000	8000	4000	6000	8000	4000	6000	8000	Wheel Load
13:00 x 24	35	35	35	60	60	60	80	80	80	100	100	100	TIP
18 ply	50	54	57	63	66	69	71	75	79	80	85	88	GCP
13:00 x 24	35	35	35	60	60	60	80	80	80	100	100	100	TIP
22 ply	50	54	57	66	69	72	77	81	84	87	91	95	GCP
13:00 x 24	35	35	35	60	60	60	80	80	80	100	100	100	TIP
26 ply	54	59	62	69	73	76	81	85	89	91	96	100	GCP

GCP Ground Contact Pressure

TIP Tire Inflation Pressure

Note: Interpolation is necessary between either/or Loads and Pressures. Each axle of pneumatic roller should be weighed separately and ballasting done accordingly to provide uniform tire load and contact pressure.

Figure 5-1

The recommended minimum slope ratios for various vehicular speeds are:

70 mph (110 kph)	1 vertical to 50 horizontal
50 mph (80 kph)	1 vertical to 30 horizontal
35 mph (55 kph)	1 vertical to 10 horizontal

This schedule will usually require use of more than one width of paper. Sufficient material must be temporarily placed in front of the paver to prevent a deformation from occurring in the permanent ACP behind the joint. Care should be taken to construct a straight line taper without humping. As the thickness of the course increases, the longer the taper should be increased over the minimum length for a satisfactory transition.

The open longitudinal joint resulting from any day's operation should be abutted by paving the adjacent lane on the next day.

At the beginning of the day's work, special care must be exercised in the construction of the transverse joint joining the freshly laid mixture with the previous day's work. The paver should be allowed to proceed at a low rate of speed (creep) ahead of the joint, until hand finishing of the joint is completed. The paver should not come to a full stop or the screed may settle and cause a dip at that point. The Inspector should check this work closely, using the 10-foot (3-meter) straightedge to see that the requirement for surface smoothness is met.

Spreading and Finishing

In the construction of asphalt concrete pavements, it is extremely important that the paving machine be in good adjustment and that the machine and screed operators be experienced and capable. The Inspector should be quick to note operational practices which have an adverse effect on the work, and request the Contractor to make immediate corrections.

Before beginning paving work for the day, or before resumption of paving following a lengthy shutdown, the Inspector must see that the machine is cleaned of all congealed pieces of mix and that the screeds are heated to the operating temperature. If a delay occurs during the day which will allow the mix to cool below the temperature required for proper compaction, the Contractor must construct a transverse butt joint before the mix cools below the temperature required for proper compaction.

Compaction procedures will be as specified in Section 5-04.3(10) of the *Standard Specifications* and Chapter 5-4.2B(3) of this manual.

During the paving operation, constant inspection must be maintained to see that the machine is producing a smooth pavement having the required characteristics of texture and uniformity. The Inspector must require immediate action be taken to correct any trouble that may develop and should attempt to assist the Contractor in locating the source of the trouble.

Listed below are some common difficulties encountered on asphalt paving work, together with the most common causes of the difficulty:

- *Wavy surface (short, choppy waves):* Worn or poorly adjusted tracks or drive train; truck driver setting brakes too tightly; excessive paving machine speed.
- *Wavy surface (long waves):* Excessive variation in amount of mix carried in auger box ahead of screed; over-controlling screed; roller operating too fast.
- *Excessively open surface texture:* Improper adjustment of strike off; screed plate rough or galled; excessive paving machine speed.
- *Varying surface texture:* Insufficient mixing; trucks being loaded improperly at the plant; segregation of mix in trucks; poor gradation control at mixer; screed not uniform across paving machine.
- *Streaked surface texture:* Insufficient mixing; segregation of mix in trucks; worn or damaged screed plate.
- *Bleeding patches on surface:* Asphalt not uniformly mixed; excessive moisture in mix.
- *Irregular rough spots on pavement:* Roller standing on fresh surface; abrupt reversing of roller; trucks backing into paver; poor workmanship at transverse joints.
- *Cyclic open texture, that usually matches up with the distance that each truck load of material covers:* This is primarily caused by the machine operator allowing the head of material to fall below the top of the augers or by dumping the wings of the paver when the hopper is low on material. Hopper wings should be operated only occasionally and then with some load in the hopper. This may also result from "thermal" segregation where there are nonuniform temperatures across the mat behind the paving machine.
- *Crooked or irregular longitudinal joint lines:* Careless machine operation or no guide string placed for the machine operator to follow.

Some paving machine operators have a tendency to operate the paver at speeds in excess of that required to handle the quantity being produced at the plant, resulting in a jerky, stop and go operation. *This must not be allowed.* Generally, the slower the paver is operated, consistent with plant production and roller capacity, the smoother the finished surface will be. The ideal speed of the paver will be that which will result in a smooth, nearly continuous process with a minimum of stops required in waiting for trucks

and/or the compaction equipment. If the production rate of the mixing plant is very high, requiring excessive speed of the paver, the Contractor will be required to correct the situation by slowing his production or using additional paving machines and generally, additional compaction equipment. Delivery must be adjusted to match production and uniform lay down. A formula is provided in Section 5-4.2(C) to help determine the approximate paver speed for continuous operation.

The Inspector should periodically check for difficulties while dumping truck loads of mixture into the hopper of the paving machine. Trucks must not be allowed to back into the paver in such a manner that they bump the paver, nor shall trucks which bear against any part of the machine other than the pushing rollers be permitted to dump into the paver. Any mix spilled onto the pavement in front of the paving machine must be shoveled into the hopper of the machine or back into the truck before paving is resumed. The Inspector should be especially watchful to see that mix spilled in the paths of the tracks or wheels of the machine is removed.

Checks should be made of the crown adjustment of the screed, to ensure that the finished surface will conform to the required section.

Particular attention must be given to the construction of the longitudinal joint when paving adjacent to a previously laid lane. The Inspector must insist that hand raking be held to a minimum, by adjusting the screed so that the freshly laid pavement is of the proper depth, allowing for compaction, to meet the grade of the previously laid lane. The uncompacted mixture immediately adjacent to the joint should be left slightly high so that the roller can compact the mixture thoroughly at this point. The rakers must not be permitted to cast excess mixture over the uncompacted, freshly spread lane. The Inspector must insist that segregated coarse particles of mix remaining after making the joint be removed and wasted, to avoid construction of a coarse, porous joint.

Surface Smoothness

During construction of the leveling course, an attempt must be made to remove all depressions and sags in the grade line by adjusting the depth of the course. The Inspector should work closely with the screed operator to accomplish this result by pointing out irregularities in the base far enough ahead of the machine to allow proper adjustment of the screed to eliminate the irregularity. The objective to be attained during construction of the leveling course is the complete elimination of all irregularities, so that the placing of the wearing course can be accomplished with a minimum of screed adjustments. If the base is excessively rough, pre-leveling should be done prior to construction of the leveling course.

Section 5-04.3(3) of the *Standard Specifications* require the use of automatic screed controls on the paver. It must be remembered that as the equipment becomes more sophisticated, it also becomes more necessary that it be properly adjusted and operated or satisfactory results will not be achieved. With proper operation, this equipment will give excellent performance.

When reference lines are required, or the Contractor elects to use reference lines, particular attention must be given to see that the line is properly set and tensioned. If the line is offset too far from the paving machine, vibrations of the machine may affect the operation of the automatic controls which in turn affect the smoothness of the pavement. The reference line for asphalt paving machines normally will not be used when the roadway is under traffic. The specifications provide that if the course that the pavement is to be placed on is superior to established smoothness requirements, the paver may operate from a multi-footed ski-like arrangement instead of the wire. The inspector must ascertain that smoothness of the pavement continues to be superior to the requirements of the specifications.

Normally, when the surface for paving is properly constructed using a reference line, or the first course of pavement is constructed using a reference line, subsequent courses of pavement may be constructed using skis with continued improvement in the surface smoothness.

Manual operation of the screed controls will be permitted in the construction of irregular shaped and minor areas, such as gore areas, road approaches, left turn channelization, and tapers.

Surface smoothness and good riding qualities of a pavement are secured only by hard work and strict attention to small details. The Inspector should continually study the conditions peculiar to the job, and strive to obtain the smoothest surface possible. A smooth riding pavement costs no more than an unsightly, poor surface, but it does require constant, careful inspection of all details of construction to obtain the desired results.

Section 5-04.3(13) of the *Standard Specifications* outlines the smoothness requirements using a 10 foot (3 meter) straight edge oriented in both the longitudinal and transverse directions. Smoothness checks should be made at the starting point of paving, at transverse “night joints”, whenever the paver is stopped for any length of time, or where ever the inspector suspects a smoothness problem.

5-4.2B(3) Compaction

General

Adequate field compaction is very important in the construction of durable asphalt concrete pavement. When good compaction is coupled with the proper mix design, extended service life of the pavement can reasonably be expected.

The importance of thorough, early compaction of asphalt concrete cannot be over stresed. Two major factors are working simultaneously in a well-designed mixture to resist good compaction - (A) the stability of the mix in place increases with each pass of the roller, and (B) the viscosity of the asphalt increases as the temperature drops. A temperature-viscosity curve for the type of asphalt used in the mix can be a useful tool in determining the ideal compaction temperature of the mix.

Although densities occasionally may be increased at temperatures below 175 F (80°C), vibratory rollers may damage the mat internally in ways that cannot be seen at the time of compaction. To counteract these factors, the Inspector should insist that compaction be accomplished at a temperature above the minimum specification of 175 F (80°C). When paving in air temperatures over 90 F (30°C), some or all of the compactive effort may have to be delayed, but in no case should it be delayed below 175 F (80°C) mat temperature.

The desirable end point of a properly compacted asphalt concrete is a dense and nearly impermeable mat. Acceptable densities can be obtained if the mix proportions are proper. If not, no reasonable amount of compaction can produce acceptable density. Without proper density, the asphalt concrete will be subject to early distress and failure. Having available the 0.45 power plot of the design and production mixes will help the Inspector know what to expect in terms of compaction difficulty.

The asphalt content in an ideal mix should be sufficient to allow the mix to compact to specification density. The mix design asphalt content is a good starting point; however, the asphalt content is subject to adjustment as indicated by field tests on compacted mix. Increasing the asphalt content on high traffic volume routes carries more long term performance risk than on low volume roads.

The use of thicker lifts of pavement permits more time for compacting and will increase the effectiveness of the equipment. With careful organization and planning, the production of over 400 tons (360 tonnes) per hour may be compacted by as few as three rollers on deeper lifts. It is also apparent that high production rates with thin lifts might require twice as many rollers or more.

Usually the Contractor has a companion group of rollers, pavers, and production equipment that is used together on ordinary paving projects and have proven to be compatible. By consulting with the Region Staff, it may be determined if the full complement is present or just what past experience has been. Before production begins, the Regional Materials Engineer should be notified to provide equipment, guidance, advice, and arrange for the coring of the pavement to correlate nuclear densities to core densities for calculation of a gauge correlation factor.

In general, compacting shall begin on the outer edge of the course and progress toward the center of the pavement except on superelevated sections where the initial effort shall be on the lower side with the progressive compaction toward the higher side.

The type of rollers and their relative position in the compaction sequence shall generally be at the Contractor's option provided specification densities are attained and it's not specified otherwise in the contract provisions. An exception is that the pneumatic tired roller is required between October 1 and April 1. On wearing course, coverage with the vibratory or steel roller may precede pneumatic tired rolling. The maximum speed of rollers shall not exceed 3 mph (1.3 meters per second) for vibratory, 4 mph (1.5 meters per second) for steel-wheeled, and 5 mph (2.2 meters per second) for pneumatic tired. Better performance is generally obtained in the $1^1/_2$ to 2 mph (0.7 to 0.9 meter per second) range with vibratory rollers. The speed of the roller must be slowed and the vibrators turned off momentarily while reversing direction.

The vibratory roller is generally used for the primary compaction on ACP mixes and sometimes for finish rolling in a static mode. Two terms frequently used with vibratory rollers are frequency and amplitude. Frequency is how often the impacts are applied and is normally stated in cycles per second. Amplitude is the greatest vertical movement, up or down, of the drum during a cycle. The current specifications for vibratory rollers are:

1. A variable amplitude with at least two settings.

2. A variable frequency with a 2000 RPM minimum.

3. The maximum rate of travel shall be limited to 3 mph (1.3 meters per second).

4. Pneumatic propulsion on surface courses shall be limited to smooth tires that will not leave visible tracks.

Vibratory rollers achieve their compaction effect from the kinetic energy produced by the vibrating components of the roller. Vibratory rollers usually work best when operated with high frequency and low amplitude on dense graded leveling and wearing courses. On hills, it usually works best to operate the vibrators only while traveling uphill. Over vibrating can cause decompaction. Operated in the static mode, despite their apparent bulk, they are less effective than even intermediate size conventional steel wheel rollers due to their lower mass.

Vibratory rollers may not be practical in areas where there are mortar joint concrete or certain other vintage pipe used for utilities or irrigation. Compaction can be achieved with pneumatic rolling if the mix is good. Elimination of vibratory rolling is not consistent with the *Standard Specifications*, and will generally require a special provision or change order before an alternate method of compaction is considered for use.

With pneumatic roller breakdown it will be necessary to hold in about 6 inches (150 millimeters) from unsupported edges to avoid lateral displacement. Keep the tires dry and the roller within 200 feet (60 meters) of the paver and in constant motion. A narrow overlap of successive trips is desirable. During the initial compaction, the rollers direction should be such that the powered wheel passes over the uncompacted mix first. Breakdown tiller wheels will be turned the least possible amount in the uncompacted area and thereby avoid pushing and shoving the hot mat in a local area. Avoid stopping the roller in the same place. Continue pneumatic breakdown rolling until deep tire tracks are ironed out as much as possible and the roller walks out to the top of the mat, and then move ahead. The most desirable arrangement is to have two similar pneumatic rollers about 6 feet (1.8 meters) wide with the "air-on-the-run" feature and posi-traction type differential followed by a tandem steel wheel roller. The steel wheel roller should follow closely behind the pneumatic roller to compact the center line joint and the edge of the pavement as well as iron out the pneumatic tire marks. The steel wheel roller will exert extra pressure on the uncompacted edge and should have no difficulty in properly compacting this edge if the roller is close behind the pneumatic rollers. Cold rubber tires usually "pick" the mat. Every effort should be made to warm the tires before compacting the mat. Sending the rollers for a drive before the work is fully organized prior to paving will help with the tires.

The ground contact pressure of pneumatic rollers is a combination of load and tire pressure as outlined on Figure 5-1 and shall be such that it will produce the desired densities without shoving or rutting the mixture.

Individual dual axles shall be weighted by the use of iron pigs, chain, rivets or other concentrated loading in addition to the usual water and aggregate tank loading to control the total roller weight (mass). Ground contact pressure is determined by the tire inflation pressure. Provided the mixture is close to the Mix Design recommended by the Materials Laboratory, a ground contact pressure of 70 psi (480 kilopascals) will be a reasonable pressure to start with. Variation in the mixture and tire pressures will soon determine the most desirable combination of mixture, temperature, contact pressures and number of applications.

Steel wheel rolling is generally used for finish rolling; however, it is sometimes used for breakdown and primary compaction. It is important that vibratory roller operation on pavement with temperatures below 175 F (80°C) not be permitted. Over-rolling by the steel wheel roller may damage the pavement more than under-rolling.

Preferably, rolling equipment should be wide enough so that a uniform application of compactive effort can be distributed over the entire course without creating hard streaks or leaving narrow porous strips. Breakdown and intermediate rolling should be completed while the mixture is above 185 F (85°C) with the finish rolling completed above 150 F (65°C). With lower temperature mixes and thin lift applications it becomes obvious that the rollers must be kept up close to the paver.

Test Sections

Construction of test sections is an important part in paving of asphalt concrete pavement.

In order for the Contractor to determine if the mix being produced is compactible, test section(s) must be constructed. In some contracts test section(s) construction is required on the first day of paving for any new mix design and the contractor must wait one additional day before beginning production paving. The maximum specified quantity of mix to be placed and compacted on the first day of paving would be as provided in the contract. The contractor is only allowed to place and compact this quantity of asphalt mix on the first day so compactibility of the mix can be determined, density gauge correlation factors can be obtained and other mix analysis made. Specifications in all cases require the contractor to construct a test section for compactibility of the mix, and if not done, the mix is considered compactible. Equally important for a Contractor to construct a test section(s) is to determine what rolling pattern with his compaction train will give best results. Test sections are financially important to both WSDOT and the contractor and therefore need careful attention. Although it is the responsibility of the contractor to show that a mix is compactible and determine his rolling patterns, it is to WSDOT's best interest to assist in construction of test sections.

When the compacted course thickness is 0.10 foot (30 millimeters) or less for any dense graded mix in the traffic lanes, or when paving shoulders and other nontraffic lane areas, regardless of course thickness, the a test section will be constructed to establish a rolling pattern. The test section shall be constructed in accordance with the following instructions (Steps 1 through 6) except that the proposed rolling pattern and equipment shall be used. The number and timing of passes with an approved compaction train that will yield the maximum density as determined in the test section, is the determining factor that adequate density is being achieved.

When paving with open graded mixes such as Class D, or when paving with prelevel, a test section will not be required. Usually, a specified minimum number of passes with a specific type or size of roller will be specified in the contract for compaction of open graded mixes.

The test section(s) provide for varying compactive efforts. If the compaction equipment and compaction conditions are right, values should increase with increasing number of roller passes. Ideally, the values should rise until a

maximum compacted mat has been reached and then flatten out as compactive effort increases. An exception to this can occur when the vibratory roller is used as it can pull the mat apart and lower the density if operated after the temperature cools to below 175 F (80°C). If the mat does not react to the compactive procedures described, then the Inspector should review the directions for test procedures to ascertain what corrective action to take.

The procedures for a test section are as follows:

1. Select a test section on a reasonably level portion of the project providing a consistent paving depth and uniform underlying conditions.

2. Compaction equipment used in the test section should be the most effective units. Pneumatic tired rollers and/or vibratory equipment in the vibrating mode are normally the most effective units.

3. Select a section approximately 200 feet (60 meters) long of course thickness depth.

4. Select a test spot within the section near the center of the traveled lane and near the middle of a truck load discharged to the paver. Avoid longitudinal ruts or nonrepresentative locations (severely alligatored, patched pothole).

5. After each roller pass, a density reading is taken with the nuclear gauge at the test spot.

6. After finish rolling, densities are then to be determined at two additional locations, 15 to 25 feet (5 to 8 meters) each side of the test spot and in line longitudinal with the direction of paving. Evaluation of the compactibility of the mix shall be made on the average of the three densities.

7. If the average test spot density is greater than 92 percent, but less than 96 percent of Rice density for wearing courses or less than 98 percent of Rice density for base and leveling courses, a satisfactory test section has been completed. If the test section values are beyond these limits, the mix design should be changed. The OSC Materials Laboratory can provide assistance as needed.

The test section should be repeated when:

1. The results of previous tests are not considered by the Engineer to be reliable.

2. The Engineer directs a change in mix composition. Note that slight adjustments in bin masses are not considered a change in mix composition.

The Contractor may request a test section when:

1. There is a change in compaction equipment.

2. Routine control tests indicate changes from results found in previous qualifying test sections. (In this instance, the Inspector should check the contractor's rolling pattern for changes and check plant test results for mix changes. Any changes should be noted on the compaction report.)

Compaction Control

Compaction is controlled by testing with the nuclear density gauge for all classes of dense graded ACP where the paving is in the traffic lanes and compacted course thickness is greater than 0.10 foot (30 millimeters). The nuclear gauge testing shall be conducted in accordance with current test methods. The specification requirements shall be a quality level of 1.00 or greater referenced to a minimum density of 91 percent of the maximum density as determined by WSDOT TM209.

Cores of the finished pavement may be substituted for nuclear gauge readings to determine densities, provided they are requested by the Contractor by noon of the next day after paving. If this alternate is done at the request of the Contractor, WSDOT shall be reimbursed for the coring expenses at the rate of $75 per core. If the cores show the materials to be within specification limits, then there will be no charge for the cores.

Control lots not meeting the prescribed minimum density standard of 0.75 CPF need to be evaluated for removal and replacement with satisfactory material. At the Engineer's option, control lots with a CPF between 0.75 and 1.00 may be accepted at a reduced price in accordance with current policies.

For Class D and preleveling mix, the compaction control shall be to the satisfaction of the Engineer.

For all other conditions, the Contractor shall construct a test section in accordance with instructions from the Engineer. The number and timing of passes with an approved compaction train that will yield maximum density with the nuclear gauge in the test section shall be used on all succeeding paving. The Inspector should make sure the Contractor is making the required number of passes and reconstruct a test section if conditions change.

5-4.2B(4) Miscellaneous Duties of the Street Inspector

When constructing plant-mixed pavement adjoining gutters, curbs, cold pavement joints, manhole castings, etc., the Inspector shall see that all contact surfaces are painted with an approved asphalt material before placing the adjoining pavement.

A detailed Inspector's Daily Report (Forms422-004, 422-004A, and 422-004B) shall be kept by the Inspector, noting all unusual occurrences, orders received from the Project Engineer, orders issued to the Contractor, and other pertinent information.

The Asphalt Concrete Pavement Compaction Report, Form 350-092, shall be prepared by the Density Inspector and distributed as shown on the form.

5-4.2B(5) Multiple Asphalt Plants

When two or more asphalt plants are used on one project, the mix from each plant must be placed with separate paving machines and compaction equipment. This is necessary because of the required adjustments on each paving operation to accommodate the different mixes and the various rolling patterns which may be necessary. Otherwise the test sections would not reflect true data for compaction controls due to different characteristics for the different aggregates or asphalt plants.

5-4.2B(6) Weed Control Under Asphalt Pavement

Weeds cause considerable damage to thin asphalt pavements such as sidewalks, shoulder overlays, and asphalt lined ditches. It is typically recommended that chemical weed control be used under all asphalt pavements less than 0.35 foot (105 millimeters) in depth unless a full depth base preparation was included in the construction. Check the contract requirements to see if soil residual herbicide is required.

5-4.2C How to . . .

Calculate Approximate Paver Speed for Continuous Operation

To assist in working with the Contractor to determine paver speeds, the following formula can be used to calculate approximate speeds required to handle various production rates at varying depths. Section 5-04.3(3) of the *Standard Specifications* requires the paving machine to be operated at a uniform speed consistent with the plant production rate and compaction train capacity, which will allow a smooth, *continuous* paving operation.

English

$$[(T \div 0.076) \div (W \times D)] \div 60 = S$$

where: T = Tons per hour
W = Width in feet
D = Depth in feet
S = Paver speed in feet per minute

Based on 2.052 tons per c.y. = 0.076 tons per c.f.

Metric

$$[(T \div 2.432) \div (W \times D)] \div 60 = S$$

where: T = Tons per hour
W = Width in meters
D = Depth in meters
S = Paver speed in meters per minute

Based on 2.432 tonnes per m^3

Compute Yield

During the paving operation, a careful record shall be kept, showing truck loads, the weight (mass) of each truck and other pertinent data. Periodically, the Inspector shall compute the quantity of mix placed per square yard (meter), and shall compare the yield against the proposed quantities. Overruns or underruns in quantities may be avoided by making a constant check of quantities placed.

Asphalt concrete pavements are designed on a weight (mass)-volume relationship of 137 pounds (74 kilograms) for one square yard (meter) of pavement of a compacted depth of 0.10 foot (30 millimeters). It is the intention in the construction of the pavement to spread the mixture according to an average yield in pounds (kilograms) per square yard (meter).

Remember that the minimum compacted depth of pavement must also be met. If the aggregates are heavier than anticipated when the quantities were computed, or if the surface that the pavement is being constructed on is not true, the average yield can be attained without meeting the minimum thickness requirement.

Weigh tickets shall be collected and a daily total weight (mass) of mixture received shall be obtained and entered on the daily report for submission to the Project Engineer. To eliminate possible errors, totals as recorded by the Plant Inspector shall be compared against the total obtained by the Street Inspector. Careful attention given to those details may save argument with the Contractor concerning pay quantities.

5-4.3 Mix Design

Establishing Mix Proportions

The Contractor is required to submit representative samples from mineral aggregate stockpiles, blend sand and RAP sources to be used for ACP production. These samples are to be shipped to the OSC Materials Laboratory for development of a mix design. Sample submittal shall include asphalt sources and the production mix gradation and combining ratios of mineral aggregate stockpiles, blend sand and RAP that will be used and this is the basis for the mix design and job mix formula. The OSC Materials Laboratory uses the Contractor's proposal to determine if a stable mix can be obtained, and also determines the asphalt oil content and percent of antistrip required (if any).

The *mix design* developed by the OSC Materials Laboratory is based solely on the information and samples furnished by the Contractor. It may be necessary to make adjustments in aggregate gradation and asphalt content on the job to fit field requirements such as workability, compactibility, and void content. Section 9-03.8(6)A of the *Standard Specifications* provides the limits of change, both for the aggregate and the oil content, that can be made by the Project Engineer. These changes can be made at the request of the contractor provided the change will produce material of equal or better quality.

Adjustments for oil content greater than ± 0.3 percent may be approved by the OSC Materials Laboratory or OSC Construction. Based on past experience in the Region, the Regional Administrator or the Regional Construction Engineer may wish to change the asphalt content beyond the ± 0.3%. To accomplish this, the Region may direct the Project Engineer to increase or decrease the asphalt content by notifying the Project Engineer in writing, or by e-mail, and sending a copy of this direction to the OSC Materials Laboratory. It is intended that this action include consultation with the OSC Materials Laboratory or OSC Construction to provide the best asphalt paving material possible.

During construction, guidance for adjustments is provided through the use and interpretation of the compaction test sections and compaction control testing results.

The Contractor's plant operator shall be advised of all results of sampling and testing performed so that the proper gate settings may be established at the cold aggregate feeders.

5-5 Cement Concrete Pavement

5-5.1 General Instructions

Concrete paving is a highly complex, mechanized operation involving tens of thousands of dollars worth of pavement in a single day's production. Proper organization and planning of the work are essential on the part of both Contractors and Engineers. Cement concrete pavement has a relatively high initial cost and WSDOT expects many years of satisfactory service from this type of pavement. It is imperative that the Project Engineer and Inspectors are thoroughly familiar with the specifications and techniques applying to the work, if this objective is to be attained.

Before construction begins, the Project Engineer should review all phases of the work, and see that all members of the crew are familiar with the duties to which they are to be assigned. Advance planning and organization of the engineering and inspection teams will do much to eliminate the confusion and improper construction sometimes found during the first day's work. All inspection equipment and testing tools should be on hand in advance of beginning of paving, and demonstrations should be made to acquaint Inspectors with their proper use.

The Project Engineer should make certain that all Inspectors are instructed in the proper methods of keeping notes, records and diaries. Accurate records of construction progress and test results are absolutely essential in evaluating pavement performance through the years.

5-5.2 Pre-Pave

5-5.2A Subgrade Preparation

The subgrade should be shaped and thoroughly compacted. Special attention should be directed to see that all parts of the subgrade are firm and unyielding. Soft spots should be removed and backfilled with suitable material. The subgrade should be prepared to a width that will accommodate the paving equipment without visible distortion.

The subgrade must be trimmed to the proper subgrade elevation and shape. After trimming, the subgrade shall be thoroughly wetted and compacted to achieve a dense unyielding surface. The subgrade must be kept in this condition until the concrete is placed.

The elevation of the subgrade should be checked either by stretching a stringline between the control wires and measuring down to the surface or by another method that provides for a satisfactory check. Extra checks should be made through crown and super transitions to be sure proper adjustments were made in the machine through this area and that no high spots exist.

5-5.2B Controls

If control stakes have not been set for previous operations, they need to be installed at this time. If the control stakes have previously been set, the installation of the wire shall be checked to verify that it is set to the proper line and grade. This is especially important if the wire is offset from its original position.

5-5.2C Equipment

Before paving operations begin, the Inspector should check to see that all the required paving equipment is on the project, it meets the requirements of the specifications, is in good working order, and is properly adjusted.

Inspection of Mixer

The following instructions apply primarily to portable mixing plants set up specifically for the project. Refer to Chapter 6-2.2 for inspection of permanent ready mix plants.

An inspection should be made of the mixing drum, to see that the mixing blades are not excessively worn. A worn blade will show wear at the center of the blade, while the ends receive very little wear. Since new mixing blades are generally straight, the amount of wear can be determined by use of a stringline or straightedge. Blades worn more than 3/4 inch (19 millimeters) must be removed and new ones installed. Make sure the interior of the drum and the blades are clean, and that accumulations of hardened mortar are all removed.

The batch counter, or timer, should be checked to see that a batch receives the full specified period of mixing before the first part of the batch emerges from the discharge gate.

The water meter should be checked for calibration to ensure that the indicated quantity of water is delivered into the mixing drum. By diverting the discharge water into a suitable container and weighing the quantity delivered, the accuracy of the meter can be checked. This check of the calibration should be made at a minimum of three different settings of the meter control, covering a somewhat wider range than that expected to be used on the job. If the quantity of water delivered does not check with the setting on the gauge, a curve should be plotted, showing actual quantity delivered for a given gauge setting.

The Inspector should check to see that no water valves or lines are leaking, resulting in loss of control of water content of the mix and should make sure that no other means are available for the mixer operator to add unauthorized water.

A careful inspection of the mixer prior to beginning of work will pay dividends in better control of the mix once the job is underway.

Inspection of Batch Trucks

Nonagitating trucks are permitted to haul plant mixed concrete provided the concrete is delivered and discharged within 45 minutes after the introduction of mixing water to cement and aggregates, and the concrete is in a workable condition when placed. The trucks shall be inspected for tightness and ability to dump or empty. If square cornered truck beds are used, corners should be baffled to prevent bridging and hanging-up of concrete.

Inspection of Paver

The slip form paving equipment must be self-propelled and capable of placing, spreading, consolidating, screeding, and finishing the freshly placed concrete to the proper pavement elevation and cross-section within the specified tolerances. Sliding forms on the paver must be rigid to prevent spreading of the forms. The paving equipment must finish the surface in a manner which will minimize hand finishing.

Slip form pavers contain various combinations of all or some of the following components: auger spreader, spud vibrators, oscillating screeds, tamping bars, and pan floats. The equipment should be checked for calibration and satisfactory operation in accordance with the manufacturer's manual before paving is allowed to proceed.

Critical features include, checking all screeds with a stringline to ensure a true plane or crown, checking the height of the finished pavement elevation, checking vibrating frequency of the vibrators and screeds, checking the feelers or sensors for sensitivity, and the related stringline for tightness to ensure adequate control of line and grade. The paver should be checked to see that it can accomplish the desired crown break section and any transition adjustments required from this section to a one plane section.

If it is necessary to stop the forward movement of the paver, the vibratory and tamping elements should also be immediately stopped. No tractive force should be applied to the machine except that which is controlled from the machine.

Inspection of Miscellaneous Tools and Equipment

The power saws shall be checked to see that they are in proper running order and adjustment to the crown of the roadway and the required depth. Extra blades shall be on hand and sufficient lighting to operate at night.

The curing compound applicator shall be checked to see that it is capable of applying the curing compound as specified at a uniform rate.

5-5.2D Mixing Operations

Batching

Refer to Chapter 6-2.2 of this manual for instructions concerning inspection of the batching operations.

Mixing

It is essential that careful, diligent inspection of the mixing of the concrete be maintained. A great many features of the work require constant attention in order that properly mixed concrete of uniform consistency will be placed on the subgrade. The concrete must be properly mixed in order that the pavement will have the desired characteristics of strength and durability. So that concrete may be finished uniformly and result in a smooth profile, it is essential that the mix be of uniform consistency.

Several items of work that the Inspector must watch are listed below:

(1) The addition of water during the mixing period is of utmost importance. Every effort should be made to see that the total water content of the mix remains uniform. Variations in water content result in variations in the strength

and shrinkage characteristics of the separate batches. Over-watered batches will cause difficulties in finishing, edge slump, and also will result in random cracks due to excessive shrinkage.

If variations occur in slump, look for:

- variation in the moisture content of the aggregates,
- leakage of water from the discharge valve into the drum,
- variations in batch sizes due to errors in weighing or spillage, or
- non-uniformity in grading in each size of aggregate.

(2) If an air-entraining agent is added at the mixer, checks need to be made of the quantity added to each batch by the automatic dispenser. Tests for air content of the mix should be made with the air meter. The automatic dispensers have been known to malfunction, resulting in an excess of air entrained in the mixture, or no air entrained at all. For this reason, occasional checks should be made to see that the dispenser is functioning properly by comparing the amount of air-entraining agent used against the number of batches mixed.

(3) Speed of the mixing drum in RPM's should be checked when the mixer is in operation. Specifications require that the drum shall revolve at the speed shown on the manufacturer's name plate.

(4) Occasional checks should be made of the mixing time. Once the mixing timer is set and locked, it must not be changed except on order of the Engineer.

(5) Check to see that the concrete is well mixed with no segregation when emptied from the mixer.

(6) The Inspector should make daily inspections of the mixer for wear of mixing blades, and to see that hardened concrete is not allowed to accumulate on the blades or sides of the drum. Proper mixing is dependent upon a clean drum with full-sized, clean mixing blades.

Transporting

The trucks transporting the concrete are to conform to the load limits specified in Section 1-07.7 of the *Standard Specifications*. If the trucks travel on or off the edge of existing pavement, see that the edge of the pavement is protected from damage by the trucks.

See that there is no segregation in the concrete when it is discharged from the truck and that the complete batch is discharged. See that the trucks are properly cleaned at the end of each day's operation.

5-5.3 Paving

5-5.3A Preparation

Ahead of the paving operation, the subgrade must be properly prepared with some type of "fixed" control template to accommodate the width of the paver. The subgrade must be properly dampened so as to have no water demand from the mix, but, also, the concrete must not be placed on subgrade on which pools of water have formed. If concrete is delivered by trucks on the grade, subgrade disturbance should be kept at a minimum.

A very important factor in obtaining a superior product with slip form paving is uniformity of operation. The Engineer should ensure that the plant, mixing facilities and hauling units are in quality and quantity balance to supply the paver with an adequate quantity of concrete for continuous operation at the recommended speed, without sacrificing uniform slump. Considerable pavement roughness can be attributed to spasmodic operation, and this should be held to a minimum.

It is very important that uniform consistency of the concrete be maintained. The *Standard Specifications* no longer require the slump be maintained between $^3/_4$ inch and $1^1/_4$ inch (19 mm and 32 mm) unless otherwise modified by the Engineer. The current requirements for water/cement ratio and edge slump are intended to control consistency.

5-5.3B Placing

As paving progresses, the Inspector should be alert to the wire position just ahead of the machine, since the most precisely set control can be disturbed by workers or equipment hitting it. If you notice anyone or anything bumping, touching, leaning on or otherwise in contact with the control wire, notify the Contractor immediately. It is much easier to correct a misaligned control wire that to repair the pavement after it has been placed.

The unconsolidated concrete in front of the paver should be kept well distributed by spreading or by dumping. As the truck or mixer discharges the mix onto the grade in front of the paver, the forces delivered to the machine should be held to a minimum, with all systems functioning as designed. If the paver is not moving, the vibration should be off. When vibration is in progress, it is important that the concrete becomes uniformly plastic for the full slab width as it passes through the vibration area. A lack of consolidation at one position on the machine could cause a potential fracture line parallel to the direction of movement and also a rough and uneven finished surface. The machine should always operate with a full head of material in front of it to prevent an abrupt reduction in slab thickness.

It is possible that experimentation may be necessary at the beginning of paving. To start, no trailing forms should be used on the machine and all finishing equipment should be engaged. This could then be modified if problems occur. One of the prime contributors to edge slump is high slump concrete. This should not be tolerated. Another is tie bar insertion for abutting lanes which should be installed ahead of the final finishing.

Edge slump of the unsupported sides behind the paver is one of the major problems to be combated on slip form paving. The surface should be immediately straight edged by the Contractor and methods corrected to deliver a consistently true edge. Trailing forms can be used to give support beyond the length of the paver, but this may not be the answer. It is possible that more damage than good is done by trailing forms in some cases, by drag resistance pulling down the edge, or by mechanical vibration transmitted through the paver linkage to the form. This comment is also applicable to a trailing finisher. Remember that the concrete is between the moving forms only a few minutes and does not take its initial set until long after the forms leave it.

If water is added to the surface from a spray bar at the rear of the machine it should be in the form of a fine fog spray to avoid washing of the surface and extreme care must be exercised to see that the amount of water added is held to a bare minimum. Addition of excessive amounts of water during finishing will weaken the surface of the concrete and may result in hair checking or scaling of the pavement surface at an early date. If a considerable amount of water is continually required to finish the concrete, it may be better to add more water to the concrete mix to reduce the need for spraying water on the surface. Rain on a green unformed slab can cause disastrous edge slump and erosion. The Contractor should be encouraged to halt operations previous to this circumstance, and should be prepared to protect the pavement at all times.

Although the paver template was established true “dry”, soon after paving starts, and periodically thereafter, the slab template should be checked by stretching a line over the wires (transverse) and measuring down to see that the machine has not changed due to the concrete support. This check should also be made through curves and transitions to ensure that the proper section adjustments are being made.

Behind the paver, a grout rod 4-inch to 6-inch (100-mm to 150-mm) aluminum pipe is dragged parallel to and at a skew with the pavement to heal minor faults in the surface. This may be replaced with other methods at the Contractor’s discretion.

The slip form paver behaves similarly to an asphalt paver with the front probe approximately $^{3}/_{16}$-inch (5-mm) higher than the rear. This will probably vary with the machine, due to mass distribution, etc.

Slope of less than this produces an unstable characteristic and an undulating profile, slopes in excess of the correct one cause the machine to repeatedly build up and then slump down. If the symptoms occur, this is one place to check. The machine also has about $^{3}/_{4}$-inch (19-mm) convergence in the sides, to encourage stability. Hand finishing, water adding, and other surface manipulation should be kept at a minimum.

5-5.3C Installing Tie/Dowel Bars

Tie/dowel bars must be installed where specified in the *Standard Plans*. Tie bars must be placed so that equal lengths of the bars project into the two lanes of adjoining pavement. When paving two or more lanes at a time, the tie bars are placed at the juncture of the lanes by mechanical means. The Inspector must be alert to see that the bars are set at the proper spacing and depth and are properly centered between the two lanes.

When placing tie/dowel bars in the edge of a slab, the ends of the bars projecting from the forms should be protected against disturbance which might destroy the bond between the concrete and steel. The bars already in place shall be bent to lie close to the slab to permit preparation of the subgrade of the adjoining lane, and carefully straightened to their proper position before placement of concrete.

5-5.3D Finishing

After the concrete has been given the preliminary finish by the paving machine, the Contractor shall check the surface with a straightedge device not less than 10 feet (3 meters) in length. High and low areas indicated by the straightedge shall be corrected. The requirements of checking the surface with the straightedge may be waived if it is demonstrated that other means will consistently produce a surface that meets the requirements for surface smoothness.

Before the concrete has taken its initial set, the edges of the pavement on each side of transverse construction joints shall be edged with a $^{1}/_{8}$-inch (3-millimeter) edger.

The pavement shall be given a final finish by texturing with a comb perpendicular to the center line of the pavement. The comb shall produce striations approximately 0.01 foot (3 millimeters) minimum in depth in the fresh concrete with spacing of the striations at approximately $^{1}/_{2}$ inch (13 millimeters). If the striation equipment has not been previously approved, a test section shall be constructed prior to approval of the equipment. It is important that the comb be used when the concrete is at the proper consistency. If the concrete is too soft, it will not retain the proper texture obtained by the comb, and if the concrete is too hard, the proper texture will not be achieved. The comb should be set up and ready to use well in advance of the time it will be required.

In general, the paving contractor is responsible only for the pavement placed by them. This includes the smoothness of the pavement on both sides of any and all joints constructed. On the other hand, the Contractor would not be responsible for pavement placed by another contractor or if the work abuts a bridge or approach slab constructed on a separate contract. When leaving or approaching such joints, the center of the profiler will be started or stopped on the pavement to be profiled at a point approximately 15 feet (5 meters) from the joint. The remaining areas that are unprofiled would be checked for smoothness with the 10-foot (3-meter) straightedge in accordance with current practices used on bridge decks.

Since the primary goal is to obtain a smooth pavement, it would be advisable to run the profiler over the joints at the beginning and end of the project, as well as any intermediate joints as described above, and exclude these readings from the profile index. Should these areas meet straightedge tolerances, but not that for the profiler, the consideration should be given to grinding which would be performed at WSDOT's expense.

Section 5-05.3(12) of the *Standard Specifications* requires that the pavement smoothness be checked by not later than 5 p.m. of the day following the placing of the concrete by the Contractor in the Engineer's presence using the computerized recording profiler to determine whether the equipment and methods used by the contractor are producing a pavement meeting the smoothness required by the specifications. For the purposes of determining the "daily profile index", two or more profiles may be averaged together (see example in WSDOT Test Method 807). The "daily profile index" may also be used to identify those areas having high points in excess of 0.3 inches (7 millimeters) which must be reduced by abrasive means until reruns indicate the area does not exceed the allowable deviation. The longitudinal "profile index" of the pavement is based on the elevation of any point on the pavement relative to the elevation of points 12.5 feet (3.8 meters) ahead of and behind the point. This is measured by a 12-wheeled vehicle having a 25-foot (7.62-meter) wheel base and a reference wheel, free to move in a vertical direction, suspended midway between the outer wheels. The vehicle is calibrated to record longitudinal travel and vertical variations in elevation on a continuous strip chart as it traverses a section of pavement. The "profile index", which is determined from the recorded chart of each 0.1-mile (0.1-kilometer) section, is defined as the cumulative total of recorded elevation extremes above or below a standard variation of ±0.1 inch (±10 millimeters).

For example, if the chart for a 0.1-mile (0.1-kilometer) section showed all elevation extremes to be within the +0.1 inch (1.5 mm) standard, except for 2 points which measured +0.2 inch (+3 mm) and +0.3 inch (+4.5 mm) respectively, the "profile index" would be 0.3 inch per 0.1 mile (4.5 mm per 0.1 kilometer), or 3 inches per mile (45 mm per kilometer).

The "daily profile index" may be used for acceptance purposes should the various individual indexes used to determine the "daily profile index" not exceed 0.7 inches (10 mm) per any 0.1-mile (0.1-kilometer) section or 7 inches (100 mm) per mile (kilometer).

Grinding depths should be limited to 3/8 inch (9 mm). If the specifications cannot be met with this, the section should be removed. Low areas which grinding cannot feasibly remedy shall be sandblasted, filled with epoxy bonded mortar and textured by grinding. Areas which exhibit improperly finished surfaces and would require extensive patching should be removed at the Engineer's discretion.

5-5.3E Curing

Immediately following final finishing of the concrete, or after free water leaves the surfaces, the curing compound should be applied. The purpose of curing, whatever method is used, is to prevent the loss of moisture required to hydrate the cement so that the concrete will gain its proper strength and durability. It is essential that a complete coverage of curing compound be applied to seal the exposed surface of the pavement.

On most paving work, specifications will call for machine application of the curing compound. It should be seen that the spray nozzle is adequately protected from the wind by shielding so that the compound is not blown off the pavement surface. The Inspector shall check to see that the specified rate of coverage is obtained.

The efficiency of the curing compound in preventing escape of moisture from the concrete is dependent upon the thickness of the membrane. For this reason, it is essential that the compound be evenly applied over the exposed surface at a rate of application not less than that specified.

The curing membrane must be protected from damage by foot traffic or equipment. There is a certain amount of foot traffic required in sawing joints, operating the profiler and other operations. This traffic should be held to a minimum, and if damage from undue scuffing or other causes does occur, the area shall be re-sprayed with the required amount of curing compound. Care must be exercised so that curing compound is not sprayed into saw cuts, as the joint sealing compound will not adhere to the concrete in the joints if the curing compound is present.

When pavement is being constructed in early spring or late fall, the Engineer must be alert to predictions of freezing weather, and see that the Contractor is prepared to protect the fresh concrete from freezing, as required in Section 5-05.3(14) of the *Standard Specifications*.

When special protection against freezing is required, the protective earth or straw covering must be placed against the sides of steel forms, if used, as well as on the surface of the pavement, since steel offers poor insulation to the change in temperature.

5-5.3F Joints

Contraction Joints

As concrete cures and hardens, a change in volume occurs due to loss of moisture and cooling. This shrinkage results in tensile stresses being set up in the pavement, causing cracks to develop. History has shown that transverse cracks will develop at about 15-foot (4.5-meter) intervals along the length of a slab, and that a slab wider than 15 feet (4.5 meters) may crack longitudinally. Random spacing is specified to break up the harmonics occurring from the wheels rhythmically crossing joints (see the *Standard Plans*).

The purpose of contraction joints is to control the cracking of the concrete, thereby preventing ragged random cracks which spall and require expensive maintenance. Good construction of these joints is of the utmost importance, and inspection of this work is one of the most important phases of the Engineer's duties.

Contraction joints are weakened planes which collect the cracking into a controlled joint. These joints are made by sawing and pouring a hot or cold filler into the joint. The purpose is to create a maintainable joint in the slab and cause the crack to form along the plane of the joint.

This type of joint is constructed by sawing a groove in the hardened concrete to create a plane of weakness along which the crack will form. The saw cuts are made with the circular saw blades edged with abrasives or diamonds. On full width construction, a gang sawing machine using several blades simultaneously is generally used to saw the transverse joints. When the gang sawing machine is used, the Inspector must see that the individual blades are properly aligned and set to cut the required depth.

It is necessary to control the time of sawing transverse joints very carefully, so that sawing may be done when concrete has hardened as much as possible without delaying so long as to allow development of random cracks. It is impossible to state a sawing schedule that will be ideal for every job, since curing conditions vary a great deal from job to job. Some generalizations can be made concerning sawing, but the Engineers on each job must determine from experience the most suitable schedule for that job.

It is desirable to delay sawing as long as possible to allow the concrete to gain enough strength to resist raveling adjacent to the saw cut. Sawing green concrete produces excessive wear on the saw blades, and causes washing, raveling, and other structural damages to the concrete near the joint. However, it may be necessary to make some early cuts to control cracking.

In general, a program of sawing control joints should be followed, sawing every fifth joint, not to exceed 64 feet (19.5 meters), as soon as the concrete hardens sufficiently to resist excessive raveling. The time of beginning sawing may vary from about 6 hours on hot, dry days to as long as 18 hours when the weather is cool and the humidity high. The Inspector must use good judgment in controlling the sawing sequence. Sawing of the intermediate joints should follow the sawing of the control joints. It will usually be found possible to delay sawing of the final joints until the day following placement of the concrete (see the *Standard Plans*).

By observing the frequency of cracking and opening of joints the next day, it will be possible to lay out a sawing schedule that will give best results. If only the control joints are cracked, the sawing of the intermediate joints can be delayed further, given fairly constant weather conditions.

Sawing of the longitudinal joints on full width pavement can be delayed as long as 3 days with no danger of random cracking.

The Engineer should mark off the locations of the transverse joints and should check frequently to see that the specified depth of cut is sawed. Since much of the sawing will be done at night, the Inspector should be equipped with a good flashlight to properly examine the condition of saw cuts and to watch for random cracks.

When paving a lane adjacent to a previously paved slab, an early morning examination of joints in the existing lane will show the joints that are open and working. These locations should be marked for sawing control joints in the second lane. Friction at the construction joint and the tie bars will transmit stresses to the new slab and may cause random cracking to occur. For the same reason, uncontrolled cracks in the first lane should be matched with a control joint in the second. In addition, a bond breaker, such as a small piece of roofing felt, should be over each working joint to prevent uncontrolled migration of the crack into the adjacent slab.

Construction Joints

A construction joint shall be made at the end of each day's paving by placing a header board transversely across the pavement. Uncapped dowel bars should be installed in the joint, seeing that the dowels are parallel with the centerline and profile of the pavement. The ends of the dowels projecting from the header should be protected so that they will not be disturbed or moved from their correct positions.

Upon beginning paving the following day, any broken curing seal on the end of the previous day's work must be re-sprayed with curing compound. In addition, the exposed dowel bars shall be "greased" to allow for future slab movement.

5-5.4 Post Paving

5-5.4A Sealing Sawed Contraction Joints

Prior to opening of the pavement to traffic, sawed joints must be sealed with an approved type of filler material. Before application of the filler material, the joints must be thoroughly clean and dry. In most cases, it will be necessary to clean the saw cut with a carborundum blade saw and remove dirt and dust with a jet of compressed air. It is important that the saw cut be completely filled to within 1/4 inch (6 mm) of the top with the filler material. The Inspector can check this by probing the joint after sealing with a stiff wire and watching for sagging of the filler below the top of the joint.

5-5.4B Thickness

Section 5-05.5(1) of the *Standard Specifications* outlines procedures for thickness determinations and provides penalties when prescribed tolerances are exceeded. Before final payment, the thickness tests will have to be made in order to determine the quantities.

5-5.4C Opening to Traffic

During the curing period designated for the concrete mix, the pavement must be properly barricaded to close it to all traffic. If necessary, the Contractor may be required to furnish a person to prevent traffic from using the pavement.

When the pavement has developed a compressive strength of 2500 psi (17 megapascals), as determined from cylinders made at the time of placement, it may be opened to traffic. The pavement should be cleaned either by brooming or a pickup sweeper prior to opening.

5-5.5 Unfinished Cement Concrete Pavement

5-5.5A Forms

Metal side forms, conforming to the requirements of Section 5-05.3(7)B of the *Standard Specifications*, shall be used for the construction of unfinished cement concrete pavement unless the Contractor requests to use an approved slip form machine.

It is essential that the base of the steel forms have full, equal bearing upon the subgrade throughout their length and width. They should be set true to alignment and grade and firmly staked with steel pins to avoid movement. Steel forms must never be set on blocks or pedestals. After the forms are firmly staked in place, a final inspection of line and grade should be made by sighting along the tops of the forms. Minor adjustments in grade can be accomplished by tamping additional subgrade material under the form base by an approved mechanical form tamper.

If major changes in alignment or grade are required, the forms should be removed and the subgrade reshaped to the proper elevation and recompacted before resetting the forms.

5-5.5B Joints

Contraction joints will be provided by scoring the surface 1 inch (25 mm) deep to create a weakened plane. The joints shall match transverse joints on adjacent concrete pavement and be at 15-foot (4.5-millimeter) intervals transversely on other areas.

5-5.6 Testing Equipment/Reports

5-5.6A Testing Equipment

Specified screens, sieves, and scales

Slump cone

Pycnometer

Air meter

Straightedges and stringlines

Thermometers

Stop watch

Flashlights

Unit weight (mass) bucket,
(1 or 1/2 cubic foot) (0.01 or 0.02 cubic meter)

5-5.6B Records

The Project Engineer is responsible for the keeping of proper records which must include the following information:

Record of cement received and used

Record of batches weighed and mixed

Record of daily yield

Screen analysis of aggregates (see Chapter 9)

Record of cement factor

Record of density of fresh concrete

Air-entraining agent used, and air meter test results

Rate of application of curing compound

Inspector's diaries

Record of surfacing depth determinations (see Chapter 4-4.4)

5-5.7 Check Lists

For the convenience of the Inspector, some of the most important inspection duties on concrete paving work are listed below:

Pre-Pave

1. See that all testing tools and equipment are on hand and in good condition.

2. Inspect Contractor's paving equipment; see that all deficiencies are corrected before paving is begun.

3. Calibrate water meter and air-entraining agent dispenser on mixer.

4. Check capacity and condition of batchtrucks.

5. Check preparation of subgrade; watch for soft spots.

6. See that forms are in good condition and are set securely, true to line and grade. If slip form paver is used, check position of wire.

7. Make sure subgrade is wetted thoroughly in advance of paving.

Paving

8. Check mixing time frequently.

9. Watch for variations in consistency of mixed batches.

10. Make tests of air content of mix in accordance with Chapter 9.

11. Check quantity of air-entraining agent used against number of batches mixed.

12. Make cement factor test in accordance with Chapter 9. On projects using slip form pavers, density tests shall be made in accordance with Chapter 9.

13. Make test beams as required by Chapter 9; see that they are cured properly.

14. Make complete, accurate record of test results and computations.

15. See that tie bars and dowel bars are installed properly.

16. Watch for excessive movement of forms under weight (mass) of paving equipment.

17. Check frequently to see that vibrators are operating properly.

18. Watch finishing operations to make sure excessive amount of water is not added to surface; allow fine spray only to be used.

19. Check the combing operation to see that proper, uniformly textured surface is obtained.

20. See that curing compound is placed uniformly, at the required rate, and at the proper time.

21. See that concrete is consolidated properly at night headers.

Post Pave

22. Inspect joint sawing operation to see that required depth is cut, and that the best possible saw cuts are obtained.

23. Watch removal of forms; see that damage to pavement does not occur; require curing compound to be applied on edge of slab immediately following form removal.

24. See that additional curing compound is applied over areas scuffed by foot traffic.

25. Make sure pavement is protected from traffic with necessary barricades, lights, etc.

26. See that sawed contraction joints are sealed properly.

27. Check surface smoothness each day in accordance with Section 5-05.3(12) of the *Standard Specifications*.

P65:DP/CM

Page

6-1 Structures, General Requirements 6-1
6-1.1 6-1
6-1.1A General Inspection Procedures 6-1
6-1.2 Foundations 6-1
6-1.3 Clearing the Site 6-2
6-1.4 Alignment and Grade of Railings 6-2
6-1.5 Working Drawings 6-2
6-1.6 Approval of Material Sources 6-3
6-1.7 Safety Nets and Staging 6-3
6-1.8 Working in Water 6-3
6-1.9 Final Cleanup 6-4
6-1.10 Concrete Placement Checklist 6-4
6-1.11 Inventory Inspection 6-4
6-1.12 Falsework 6-4

6-2 Concrete Structures 6-4
6-2.1 Proportioning and Mixing Concrete 6-4
6-2.1A Mix Designs 6-4
6-2.2 Inspection of Concrete Production Facilities 6-6
6-2.2A Prequalification Inspection 6-6
6-2.2B On-Site Inspection of Trucks 6-6
6-2.2C Verification Inspection 6-6
6-2.3 Concrete 6-6
6-2.3A General 6-6
6-2.3B Bridge Deck Construction 6-9
6-2.3C Use of Epoxy Resins 6-11
6-2.3D Finishing Structures 6-11
6-2.3E Drilled Shaft Foundations 6-12
6-2.3F Curing Concrete 6-12
6-2.3G Test Cylinders 6-13
6-2.4 Concrete Seals and Cofferdams 6-13
6-2.5 Pier, Column, and Wall Concrete 6-14

		Page
6-2.6	Concrete Structures	6-14
6-2.6A	Forms and Falsework	6-14
6-2.6B	Traffic Barrier, Pedestrian Barrier, and Rail Bases	6-16
6-2.6C	Reinforcing Steel	6-17
6-2.6D	Welding Reinforcing Steel	6-19
6-2.7	Prestressed Concrete Girders and Piles	6-19
6-2.7A	Shop Inspection of Prestressed Concrete Products	6-20
6.2.7B	Prestressed Girder Camber	6-20
6-2.8	Post-Tensioned Bridges	6-22
6-2.9	Measurement and Payment	6-27
6-3	**Steel Structures**	6-27
6-3.1	General	6-27
6-3.2	Layout	6-27
6-3.3	Handling and Storing Material	6-28
6-3.4	Straightening Bent Material	6-28
6-3.5	Setting Anchor Bolts and Masonry Plates	6-28
6-3.6	Erection of Steel	6-28
6-3.6A	Assembling	6-28
6-3.6B	High-Strength Bolts	6-29
6-3.6C	Welding	6-32
6-3.7	Placing Concrete Roadway Slab	6-32
6-3.8	Railings	6-33
6-3.9	Painting	6-33
6-3.10	Measurement and Payment	6-33
6-4	**Timber Structures**	6-33
6-4.1	General	6-33
6-4.2	Storage and Handling	6-33
6-4.3	Framing	6-33
6-4.4	Field Treatment of Timber	6-33
6-4.5	Painting	6-33
6-4.6	Measurement and Payment	6-33

Page

6-5 Piling 6-33
6-5.1 General 6-33
6-5.2 Treated Timber Piling 6-33
6-5.3 Precast Concrete Piling 6-34
6-5.4 Cast-in-Place Concrete Piling 6-34
6-5.5 Vacant 6-34
6-5.6 Steel Piling 6-34
6-5.7 Pile Driving 6-34
6-5.7A General 6-34
6-5.7B Test Piles 6-37
6-5.7C Pile Driving Records 6-38
6-5.8 Measurement and Payment 6-38

6-6 Bridge Railings 6-38
6-6.1 General 6-38
6-6.2 Measurement and Payment 6-38

6-7 Painting 6-38
6-7.1 General 6-38
6-7.2 Cleaning Metal 6-39
6-7.3 Applying Paint 6-39

6-8 Waterproofing 6-40

P65:DP/CM

6-1 Structures, General Requirements

6-1.1

6-1.1A General Inspection Procedures

Because of the wide variety of types and designs of structures, the Inspector should be thoroughly familiar with all of the contract documents as they provide the specific materials requirements, dimensions, and other details that make each structure unique. The Inspector should examine the contract documents extensively by:

Thoroughly reviewing *all* contract documents, including:

- The plans and special provisions for the project.
- The appropriate *Standard Specifications*, supplemental specifications, and standard drawings that apply.
- Any contractor-provided documents, such as traffic control plans, falsework and forming plans, shoring plans, and shop drawings for prefabricated items.
- Check with the Region's Environmental Section to verify that all necessary environmental documentation has been obtained for the project and is current.
- Special care needs to be taken over streams that are subject to the Endangered Species Act (ESA) as the requirements and the regulations are constantly changing and may change during the life of the contract.

Checking and verifying all:

- Plan dimensions,
- Elevations, and
- Materials quantities.

List any discrepancies that are discovered and report them to a supervisor (along with any items that may require clarification).

Set up part of the inspection documentation records in advance so that the actual dates, dimensions, quantities, and other values can be more easily filled in as the work progresses.

When inspectors cannot participate directly in the preconstruction conference, they should check with the Project Engineer after the conference to identify any areas of special concern.

6-1.2 Foundations

Elevations of bottoms of footings, as shown in the plans are determined from information secured from test holes or borings or other sources. The Project Engineer shall observe the character of the materials removed to confirm the material is similar to that identified in the test borings. If the material is similar, they shall note the elevation of such material and approve the footing elevation. If the material differs from the test borings, Olympia Service Center Construction Office shall be consulted for an evaluation. Except in solid rock foundations, it is necessary to carry all footings well below any possible line of scour. Footings in streams are often carried to greater depths in hard material than they would be in the same material where danger of scour does not exist. Footings on solid rock shall be well keyed into the rock to prevent sliding of the structure. Keys should not be less than 1 foot (300 millimeters) deep and the rock surface should be rough so it has more value as a key. Arch abutments may be designed with bottoms on an inclined plane. Care must be taken that the rock or other material is cut as nearly as possible to the plane shown. If this cannot be done, the material should be removed to a satisfactory foundation, cross-sections taken and the Construction Office should be advised and requested to secure a new design of the abutment. Material at the heel, or back of the abutment, shall be carefully removed and all loose material removed. In placing concrete in arch abutments, the concrete is placed directly against the undisturbed foundation material at the back of the abutment for the reason that an arch abutment is subject to very high vertical and horizontal loads. Footings in hard material are sometimes sloped or stepped. Steps must be carefully made and if the material is not hard enough to stand vertically the steps shall be inclined or beveled. The slope shall not be steeper than the angle of repose. Backfilling to level up foundations or to fill holes will not be allowed except by permission of the Olympia Service Center Construction Office. Under certain conditions, permission will be granted to fill a hole with a lean concrete mix. If the design soil pressure is low, unsuitable material may be replaced by granular material compacted to 95 percent density. If there is no contract unit price for the replacement material, an agreed unit price must be secured. Just prior to placing concrete, all loose material shall be removed and, if in the dry, shall be well sprinkled with water before concrete is placed.

The following are the approximate bearing values (in tons per square foot) of various materials encountered in foundation excavations:

Alluvial Soil	1/2 to 1 ton	50 to 100 kPa
Ordinary clay	1 to 2 tons	100 to 190 kPa
Dry, stiff clay	2 1/2 to 3 tons	240 to 290 kPa
Confined sand	3 to 4 tons	290 to 380 kPa
Ordinary sand and gravel	2 to 3 tons	190 to 290 kPa
Cemented sand and gravel	5 to 10 tons	480 to 960 kPa
Solid rock	5 or more tons	480 or more kPa

6-1.3 Clearing the Site

The Contractor shall clear the site of the proposed structure of all trees, brush, stumps and debris for the full width as required and in the manner specified in Section 2-01 of the *Standard Specifications*. Existing bridges, buildings or obstructions shall be removed as provided in the contract or the *Standard Specifications*.

Payment for clearing and grubbing and removing structures and obstructions shall be as provided in the contract. If no specific payment is provided, this work is considered to be incidental to the construction.

The removal or relocation of public or private utilities encountered on the site will be as provided for under the terms of Section 1-07.16 of the *Standard Specifications*.

The Project Engineer shall make a thorough study of the various public utilities involved with respect to the construction of the new work, noting the clearances required for all power and telephone lines and poles, sewer and water lines; tracks, trolley lines, ditches, signals, etc., on railroad grade separations; and possible interference with or inconvenience to adjoining property. The Project Engineer shall ascertain from the Regional Utilities Engineer if notification has been given to utilities for required movement of lines so that the construction is not delayed.

6-1.4 Alignment and Grade of Railings

Bridge traffic barriers, curbs, bridge railings and rail bases shall be carefully aligned to give a pleasing appearance. See Chapter 6-6 of this manual for further instructions.

6-1.5 Working Drawings

The Contractor is required to submit for approval detailed plans for falsework, concrete forms, cofferdams, shoring, and cribbing. These plans must comply with the requirements of the contract plans and specifications and shall be designed under the supervision of or by a Washington State licensed professional engineer and shall bear their seal and signature.

If appropriate, the plans should include:

1. Ground line at time of construction when falsework, shoring, and cribbing are involved.

2. Horizontal clearances to adjacent roadways, existing structures, and railroads when shoring and cribbing are involved.

A change order is required for any deviation from the contract. Deviation from an approved working drawing requires Olympia Service Center's approval. The Project Engineer must receive approval of these plans before the Contractor is permitted to start construction of the structure.

If a project has a large number of working drawings associated with it the project engineer should talk to the contractor about prioritizing his submittals. The project engineer should share this information with the Bridge and Structures Engineer so that the review process can be accomplished in the most efficient manner for the contractor.

The Contractor shall submit six complete sets of plans directly to the Bridge and Structures Engineer (or Terminal Design Engineer — Ferries Division) for review and approval, and two complete sets to the Project Engineer for information. If a railroad is involved, four additional sets shall be submitted to the Bridge and Structures Engineer (or Terminal Design Engineer) for each railroad company involved. See the Shop Plans and Working Drawings Table in Chapter 1.2.4I of this manual.

The Project Engineer will review the plans to see that they comply with the requirements of the contract and send any comments to the Bridge and Structures Engineer (or Terminal Design Engineer) about any field conditions or contract deficiencies that would affect the checking of the plans.

When preapproved formwork plans are used, the Contractor shall submit two sets of the plans to the Project Engineer. The Project Engineer must then advise the Contractor that construction may proceed unless a field condition needs to be resolved before doing so. If a railroad is involved, four additional sets shall be submitted to the Bridge and Structures Engineer for each railroad involved. The Bridge and Structures Engineer (or Terminal Design Engineer) will return two copies to the Project Engineer with the notations made by the railroad. The Project Engineer will then advise the Contractor that construction may proceed utilizing any notations given by the railroad.

The Contractor must allow sufficient time for review and approval of the working drawings. It usually takes two to four weeks for review and approval and if a railroad is involved, this time is increased to four to eight weeks. The Project Engineer should alert the Contractor to this time requirement and urge them to submit their plans sufficiently in advance of their need. If the plans are incomplete or unsatisfactory, the time required to get final approval is increased.

Falsework shall be supported on piling unless the Bridge and Structures Engineer (or Terminal Design Engineer) approves the use of mudsills in lieu of piling. When mudsills are proposed and indicated by the Contractor on the falsework plans, the Project Engineer must provide the Bridge and Structures Engineer (or Terminal Design Engineer) with information regarding the soil conditions and allowable soil pressures. Soil condition information and allowable bearing values shall be obtained from the Olympia Service Center Materials Engineer if unavailable in the contract plans.

When mudsills are approved, they shall be placed on undisturbed firm soil or on fill compacted to 95 percent density. The loose upper layer of soil shall be removed and the firm soil below shall be fine-graded to provide firm, even bearing over the entire area of the mudsill. If placed on sand, gravel or other material which can be displaced sideways, the bottom of the mudsill shall be set about 6 inches (150 millimeters) below the normal surface of the surrounding area. Posts should be centered on the mudsills. Mudsills shall be constructed to distribute the load from the post to the soil with very little deflection or settlement.

Falsework piling shall be driven in accordance with the specifications for permanent piles of the same material unless alternate criteria is shown on the Contractor's falsework plans. The falsework piling shall be driven to develop a bearing value as shown on the approved falsework plans. Allowance for settlement must be made for all spans, as the amount varies, depending on the character of foundations and the number of joints of timber. Piles and timbers should be carefully cut to fit, thereby reducing settlement of the falsework.

Forms for concrete deck on steel or prestressed concrete girder spans shall be fully supported on the girders. They shall in no case extend to the ground unless the steel girders are also supported on piles or posts.

The Project Engineer shall see that the falsework and forms are constructed in accordance with the approved plans. If it becomes necessary, or the Contractor desires to deviate from the approved plans, a revised plan for approval shall be submitted and the Contractor shall not start construction in accordance with the revised plan until receiving approval of the revision. All revisions to the approved plan shall be reviewed by the Bridge and Structures Engineer (or Terminal Design Engineer) to ensure the structural integrity of the falsework and formwork.

6-1.6 Approval of Material Sources

The Project Engineer shall notify the Contractor that approval of the sources of all materials used in permanent structures is required. Contractors frequently list only the local suppliers and not the origin of the material. This should be discussed with the Contractor at a preconstruction meeting. Particular care should be used to see that this requirement is met in regard to minor parts and materials such as drains, bearings, expansion dams, bolts, pins, and paints. It should also be impressed on the Contractor that inspection of all materials is required before they are used and that the best time for inspection is generally before the materials are shipped. Contact the Olympia Service Center Materials Lab for inspection services.

Prefabricated materials, such as structural steel and cast steel, are fabricated in accordance with approved shop plans, submitted by the Contractor, and approved by the Bridge and Structures Engineer. Erection of unapproved prefabricated materials shall not be allowed.

6-1.7 Safety Nets and Staging

Fall arrest and protection shall be provided. Reference WAC 296-155-24510, Fall Restraint Systems, and WAC 296-155-24510, Fall Arrest Systems. A Fall Protection Work Plan shall be on site.

Section 1-05.6 of the *Standard Specifications* requires the Contractor to furnish sufficient, safe and proper facilities such as walkways, railings, ladders, and platforms for inspection of the work. The Project Engineer should insist that the Contractor provide safe facilities and should not permit WSDOT personnel on the project when it is not safe for them.

6-1.8 Working in Water

When working in water, the Project Engineer shall see that the Contractor complies with the requirements of the specifications and the various agencies for pollution control and navigation. If the contract requires the Contractor to obtain special permits, the permits shall be obtained before the work covered by them is begun. In the event of a fuel or oil spill, the Contractor is required to notify the Coast Guard immediately, regardless of the amount of the spill or the efforts for containment.

Whenever construction work is performed in navigable waterways, it is necessary to obtain a construction permit from the Coast Guard. One of the requirements of the construction permit is regular submission of Bridge Construction Progress Reports. Two copies of the report should be prepared by the Project Engineer sufficiently in advance of the first working day of the month and transmitted to the Olympia Service Center Bridge and Structures Engineer. One additional copy of each report must be forwarded by the Project Engineer to the Olympia Service Center Construction Engineer, Bridges.

The Bridge Construction Progress reports shall be made in the form of a print of the Coast Guard Bridge Permit exhibit sheet. The print shall be marked in green to show construction progress of permanent work, in red to show work scheduled for completion in the next month, and blue

to show current location of falsework supports and other temporary obstructions to navigation, such as anchor lines, or moored barges. Supplemental sketches may be required for clarity. The forwarding memo to the Olympia Service Center Bridge and Structures Engineer should include information about any activities planned for the next month that could affect waterway users.

When a Coast Guard permit modification is proposed (by the Contractor or WSDOT), it shall be submitted to the Bridge and Structures Engineer for processing through the Coast Guard. The time required for approval/disapproval of the proposed permit modification is variable and depends on the nature and significance of the modification. Up to six months may be required.

When all construction obstructions to navigation have been removed, the Project Engineer shall report that fact immediately to the Bridge and Structures Engineer indicating the date removal was completed.

Upon completion of all permitted bridge work, a final report indicating the date of completion and certifying that the bridge has been constructed in compliance with the Coast Guard Bridge Permit shall be submitted by the Project Engineer to the Olympia Service Center Bridge and Structures Engineer.

6-1.9 Final Cleanup

When the structure is completed, the Contractor shall clean up the site and remove all materials and debris. The decks of the structures shall be swept and washed clean. The Contractor shall level off and fine grade all excavated material not used for backfill, and fine grade around all piers, bents, abutments, and on slopes so that the entire site and structure is left in a clean and presentable condition.

Upon completion of the work, all falsework piling, cofferdams, shoring, curbs, and test piles shall be removed to a minimum of 2 feet (0.6 meter) below the finished ground line. Removal limits within a stream or channel are described in Section 2-09.3(3)D of the *Standard Specifications*.

6-1.10 Concrete Placement Checklist

The Concrete Placement Checklist was developed as an inspection aid. See Figure 6-1. The use of this checklist is encouraged.

6-1.11 Inventory Inspection

After a permanent or temporary bridge or a bridge modification is complete and preferably before opened to traffic, the Bridge and Structures Office's Bridge Preservation Unit needs to perform an inventory inspection. The purpose of this inspection is to field verify certain contract plan details, to provide a base-line condition assessment of the bridge, and to identify any potential problem features.

When the bridge is nearing completion, two to four weeks before completion, the Project Engineer should notify the Bridge Preservation Engineer of the anticipated completion date. The Bridge Preservation Engineer will make arrangements with the Project Engineer for an inventory inspection.

When load or width restrictions are in force on a temporary structure, immediate notification should be provided when service is discontinued on the temporary structure and traffic is rerouted to the permanent structure.

6-1.12 Falsework

Falsework construction is a critical part of the bridge construction process. Generally, the factor of safety used for design of falsework is less than that of permanent construction. Therefore, it is extremely important that the falsework is constructed in accordance with the approved falsework drawings. Any changes to the approved falsework drawings must be approved by the Bridge and Structures Office.

6-2 Concrete Structures

6-2.1 Proportioning and Mixing Concrete

Mix design, proportioning, and mixing concrete is the responsibility of the Contractor. General information regarding proportioning and mixing concrete is provided in Appendix A at the end of this chapter to provide a better understanding of the variables involved.

6-2.1A Mix Designs

The *Standard Specifications* require the Contractor to provide a mix design for all classes of concrete specified in the Plans except for those accepted based on a Certificate of Compliance. The mix design should be submitted on Form 350-040 Proposed Mix Design. The Project Engineer should review all Contractor proposed mix designs for conformance to the contract. Specific items to look for are:

1. There is at least the minimum cement content specified in Section 6-02.

2. The minimum amount of fly ash (if called for).

3. The amount of fly ash (if used) does not exceed 25 percent.

4. The aggregate conforms to Section 9-03.

5. Air entrainment is included if required.

Concrete Placement Checklist

Location _____
(span, pier, station)

Part of structure being cast _____
(seal, footing, deck, etc.)

Concrete scheduled for _____ (a.m.) (p.m.) on
(time)

Contract No. _____

Structure _____

Inspector _____

Date _____

_____
(day of week and date)

Weather forecast is _____

1. Foundation:

A. Spread Footing:
- ___ cross-sections recorded prior to excavation
- ___ excavated to plan elevation
- ___ foundation approved by the Project Engineer (if foundation material differs from the test borings, consult Olympia Service Center Construction Office)

B. Pile Supported Footing:
- ___ excavated to plan elevation
- ___ pile order length given to contractor (if required)
- ___ pile driving completed and accepted
- ___ pile cutoff elevations checked
- ___ pile cutoff treated (timber)

2. Falsework:
- ___ constructed per approved F/W drawings
- ___ tattletails set and checked after first placement
- ___ foundations (mudsills or piling) constructed per specifications and falsework drawings

3. Forms:

A. Approved Form Drawings:
- ___ dimensions verified
- ___ elevations checked
- ___ longitudinal and transverse form alignment checked
- ___ studs and walers in accordance with approved drawing
- ___ plumb and/or batter checked
- ___ form material of proper thickness, grade and grain orientation, facing, and in satisfactory condition
- ___ form liner approved
- ___ kickers and braces in accordance with approved drawing
- ___ ties, bolts, nails, etc., in accordance with approved drawing
- ___ forms coated with a release agent

Concrete Placement Rate: _____ m/hr. at _____ °C

B. Construction Joints:
- ___ location checked
- ___ construction joint properly formed, braced, and aligned
- ___ shear keys fabricated to proper size and correctly placed
- ___ construction joint elevation checked
- ___ existing concrete at the construction joint is cleaned, roughened, and wetted
- ___ open or dummy joints formed and located in accordance to the plans
- ___ premolded joint filler secured

4. Reinforcing Steel:
- ___ cut sheets reviewed
- ___ mill certificates received
- ___ bar sizes, number, and spacing checked
- ___ bottom and top concrete cover and side clearances checked
- ___ bar ties and supports in accordance with contract
- ___ splice locations and lengths checked (welded or mechanical splice approved)
- ___ alignment and length of bars extending into future work checked

5. Post-Tensioning:
- ___ approved shop drawing received
- ___ trumpet, distribution plate, and reinforcement correctly located and secured
- ___ duct sizes, material, and wall thickness checked
- ___ ducts installed per approved profile and alignment
- ___ ducts securely tied
- ___ ducts free of holes and dents
- ___ duct joints sealed
- ___ ducts clear and unobstructed
- ___ inlets, outlets, vents, and drains properly installed
- ___ contractor prepared to clear all ducts immediately after concrete placement

6. Method of Concrete Placement:
- ___ pump
- ___ pump backup system available
- ___ bucket
- ___ chute
- ___ tremie
- ___ other list: _____

7. Concrete:
- ___ Concrete Class _____
- ___ 28 day strength _____ MPa
- ___ specified slump _____ mm (max.)
- ___ specified air entrainment _____%
- ___ flyash
- ___ air-entraining admixture, Brand _____
- ___ water-reducing admixture, Brand _____
- ___ retardant admixture, Brand _____

Estimated Concrete Quantity: _____ cubic meters

Inspector: _____

Date: _____

Figure 6-1

6-2.2 Inspection of Concrete Production Facilities

6-2.2A Prequalification Inspection

All concrete production facilities which produce concrete other than commercial or lean will be prequalified. Commercial concrete and lean concrete may be batched in production facilities which are not prequalified. The prequalification inspection and approval shall be accomplished either through the National Ready Mix Concrete Association (NRMCA) or by the Regional Materials Engineer.

The prequalification inspection by the Region Staff shall use a check list similar to that used by the NRMCA. The inspection includes a review of the following:

1. Storage and handling of cement and other cementitious material such as fly ash and aggregates.

2. That the admixtures are protected from freezing.

3. The weigh batchers are protected from the effects of wind to ensure accuracy.

4. The accuracy of the weighing equipment. That the batch scales have been serviced and certified as to accuracy by a commercial scale company within the past six months.

5. For transit-mix plants and central mix plants, the delivery fleet is to be inspected as it is an essential part of the mixing operation. The inspection shall be in accordance with the *Standard Specifications*.

6. A producer-signed agreement stating that the batch scales will be reinspected and certified at intervals not exceeding six months.

The completed inspection form shall be signed by the Regional Materials Engineer and submitted to the Olympia Service Center Materials Laboratory. The Materials Laboratory will publish a listing of all prequalified concrete production facilities. The listing is titled *Approved Concrete Batch Plants*, and identifies the concrete batch plant (company name and plant location), the date the scales expire, the date the next inspection is due, the plant type, and the status (current or expired).

The Contractor is required to submit Form 350-071, Request for Approval of Materials Source, listing the name and location of the plant which will supply the concrete and also the source of the cement, aggregates, and admixtures that will be used in the concrete. Concrete from the plant shall not be used until the plant has been approved. The Project Engineer shall take approval action based on the Approved Concrete Batch Plant listing provided by the Olympia Service Center Materials Lab and the Approved Source of Material Listing. If the Approved Concrete Batch Plants list indicates that the scales have expired, the Project Engineer shall confirm that the scales have been recertified or the source will not be approved.

6-2.2B On-Site Inspection of Trucks

Whenever ready mix concrete is used on the project, the Inspector shall be alert to the condition of the trucks being used for delivery. All trucks shall have operational counters and a device to measure the amount of water added at the site. All trucks are required to be operated within the rated capacity stated on the manufacturer's data plate. When necessary, the Inspector will inspect the drums of the delivery trucks for the condition of the fins and buildup of hardened concrete.

6-2.2C Verification Inspection

When necessary, the Project Office shall make an inspection of the batch plant to confirm: the accuracy of the batching process; that the scales have current certifications; the accuracy of the water metering devices; and to sample the coarse aggregate and fine aggregate.

6-2.3 Concrete

6-2.3A General

Type III portland cement shall not be allowed in any concrete structure unless called for in the plans or specifically approved by the Olympia Service Center Construction Office. The use of Type III cement in structures is not desired because it is believed to reduce the resistance of the finished surface to weathering, particularly to freezing and thawing cycles and is more subject to plastic and shrinkage cracking. If it is necessary or desirable to place structural concrete in service prior to the time stated in the *Standard Specifications*, authority must be obtained from the Olympia Service Center Construction Office. In such cases, test cylinders from each pour are taken and tested by the Contractor to determine the early break strength.

All sawdust, nails, dirt, and other foreign material, including ponded water, must be removed from within the forms and the forms shall be inspected and approved before placing any concrete.

The bottom of footings and forms must be thoroughly soaked with water prior to placing the concrete so they do not absorb water from the concrete mix. Care must be taken to be sure there is no ponded water when placing the concrete.

Vibrators are usually specified to be used when placing concrete. Their use is important for the purpose of consolidating the concrete in the forms, thus producing a dense uniform concrete.

Adequate vibration is necessary for placing concrete in difficult places, such as under and around closely spaced reinforcement. When steel forms are used for curbs, traffic barriers, or rail bases, external vibration may be required to eliminate voids at the surface caused by entrapped air. It is desirable to have the Contractor designate one person to operate the vibrator. This person could then be instructed in its use and an effort could be made to have that person kept on the same work whenever it is required.

The quantity of mixing water to be used shall be the minimum amount possible to produce the required workability. Vibrators shall be used only in freshly placed concrete. As soon as the concrete is dumped it should be spread out and vibrated by inserting the vibrator torpedo directly into the fresh concrete. However, it should be kept in one place only long enough to make the concrete uniformly plastic. Dependence should not be placed on the vibrator to work the concrete into corners and along the faces of the forms. Metal or wooden spades should be used to whatever extent is necessary in places where the vibrator cannot be satisfactorily employed, however, spades should be used only to accomplish complete filling of the forms and not for the purpose of puddling the concrete.

In regard to the desired consistency of concrete and the use of vibrators, the *Standard Specifications* should be carefully studied and followed. Every effort should be made to see that the specifications are followed.

Air-entrained concrete is required in all structural concrete above ground. The use of air entrained concrete below the finished ground line is optional with the Contractor.

The specifications require that construction joints shall be located and constructed as shown in the plans. Approval to add, move, or delete construction joints must be obtained from the Olympia Service Center Construction Office. Section 6-02.3(12) of the *Standard Specifications* requires that shear keys shall be provided at all construction joints unless a roughened surface is shown in the plans, and where the size of keys is not shown in the plans, they shall be approximately one-third of the area of the joint and approximately 1½ inches (40 millimeters) deep.

Construction joints are to be either vertical or horizontal. Wire mesh, wire lath, and other similar items can be used for a roughened surface construction joint but shall be removed and the joint cleaned before making the adjacent pour. Construction joints in roadway slabs must be formed vertical and in true alignment. An edger shall not be used on the joint but lips and edgings must be removed before making the adjacent pour. If the joint is properly formed, a good straight edge will be obtained with a minimum amount of lips and edgings to be removed.

Shear keys in construction joints shall be formed with 1½-inch (40 millimeter) thick lumber and shall be constructed the full size shown in the plans. For box girder webs, these shear keys are normally shown in the plans to be full width between stirrups. The specifications require shear key forms to be left in place at least 12 hours after the concrete has been placed. The plans will indicate certain joints to have a roughened surface. These joints shall be finished and prepared for the next pour in accordance with the instructions given in the specifications or as shown in the plans.

Expansion dams or the expansion dam blockout shall be carefully placed before concreting the roadway decks. They shall also be carefully aligned for crown and grade.

Blockouts for expansion joint seals must be carefully formed to the dimensions shown in the plans for proper placement and operation. Be sure to check that the rebar in the blockout does not conflict with the expansion joint anchors. The joint seal must be placed using a lubricant adhesive.

Concrete shall be placed in accordance with the requirements of Section 6-02.3(6) of the *Standard Specifications*. The Inspector should be alert to see that any method of placing concrete that causes segregation of the concrete mix be discontinued. Some of the conveyor belt systems tend to cause segregation of the mix after several exchanges from one belt to another. The Inspector shall see that the length of conveyor belt is limited so segregation does not occur. Aluminum pipe or sheeting shall not be used in contact with fresh concrete.

In heavily reinforced sections, the maximum concrete slump may be increased 2 inches (50 millimeters) with the use of a high range water reducer, as discussed in Section 6-02.3(4)C of the *Standard Specifications*. It is anticipated that possible candidates for this increase of concrete slump may be columns, cross-beams, and post-tensioned box girder web walls and other heavily reinforced members.

6-2.3A(1) Weather and Temperature Limits

Concrete may **not** be placed when rain is hard enough to:

- Cause a muddy foundation.
- Wash or flow the concrete.

The temperature of the concrete for cast-in-place concrete must be between 55 F (13°C) and 90 F (32°C) during placement. The temperature for precast concrete that is heat cured must be between 50 F (10°C) and 90 F (32°C).

The air temperature must be at least 35 F (2°C) during and for seven days after placement (unless the contractor has an approved cold weather plan).

The temperature measuring device shall be capable of measuring the temperature of freshly mixed concrete to ±1 F (±1°C) with a range of 0 F to 130 F (-18°C to 54°C).

Hot Weather Placement (Air Temperature Above 90 F (32°C))

- Cool the component materials of the mix, transport and placement equipment, and the contact surfaces at the site.
- Methods shall be preapproved by the Engineer.

Cold Weather Placement

- Concrete shall not be placed against any frozen or ice-coated foundation, forms, or reinforcement.
- A preapproved plan for cold weather placement and curing is required, if temperatures are below 35 F (2°C) or anticipated to be below 35 F (2°C) in the next seven days.
- Heat aggregate and/or water to maintain mix temperatures above 55 F (13°C).
- Control temperature and humidity after placement by:
    - Enclosing concrete.
    - Heating to 50 F to 90 F (10°C to 32°C) for seven days.
    - Add moisture for six days (discontinue 24 hours before heat is stopped).
    - An accurate recording thermometer is required.
    - Corners and edges require special attention to prevent freezing.

When heating water and aggregates, the approximate resulting temperature for a batch of concrete can be estimated from the following formula:

$$X = \frac{Wt + 0.22W't'}{W + 0.22W'}$$

Where

X = temperature of the batch
W = weight (mass) of the water
W′ = weight (mass) of the aggregates and cement
t = temperature of the water in degrees F
t′ = temperature of the aggregates and cement

6-2.3A(2) Acceptance of Concrete

The Contractor is required to provide a certificate of compliance for each load of concrete delivered to the job. Based on who is supplying the mix, the format of the certification may vary. All certifications must contain the information required by the *Standard Specifications*. If a Contractor Certification sheet is not provided by the Contractor, the form provided by WSDOT may be used.

Example forms are available as follows:

1. Manufacturer's Certificate of Compliance for Ready Mix Concrete (Form 450-001)

2. Batching Process Verification for Ready Mix Concrete (Form 350-012)

3. Proposed Mix Design (Form 350-040)

A Certificate of Compliance is all that will be required for acceptance of commercial and lean concrete. It is advised that as inspectors are collecting the Certificate of Compliance (batch ticket), they do a visual inspection of the concrete. Visual inspection should verify that the items listed on the batch ticket are included in the mix. If the concrete does not appear satisfactory for its intended use, it should be rejected.

Prior to Placement

It is the responsibility of the Inspector to compare the actual batch weights (masses) to the proposed mix design weights (masses). Aggregate weights (masses) shall conform within ±2 percent, total cementitous material weight shall be within ±1 percent. Water weight (mass) shall not exceed mix design weights (masses) by 1.5 percent or the maximum water cement ratio, whichever is less. Additives shall not exceed the recommended dosage by ±3 percent. These batching tolerances apply to all mixes.

Acceptance testing will be performed by WSDOT in accordance with WSDOT standard test methods and Field Operating Procedures. Lean concrete and commercial concrete will be accepted based on a Certificate of Compliance, provided by the supplier as described in Section 6-02.3(5)B of the *Standard Specifications*. All other concrete will be accepted based on conformance to the requirements for temperature, slump, air content for concrete placed above finished ground line, and the specified compressive strength at 28 days.

The Inspector must be familiar with the type of concrete mix and who is responsible for the mix. The Contractor is responsible for the mix design and is responsible for 28-day strength.

The Inspector must be prepared to test materials for conformance. The Inspector must also be prepared to deal with nonconformance.

Preparation as a concrete testing inspector requires knowledge of concrete properties and construction procedures. Knowledge of how to use testing equipment

and understanding the reliability of testing is also important. A continual evaluation of the testing equipment is needed to be sure it is operating and performing as required. Care and caution are recommended when transporting testing equipment and handling test materials, i.e., cylinders, molds, fresh concrete cylinders, and other samples).

Slump Acceptance

The maximum slump for vibrated and nonvibrated concrete is listed in the *Standard Specifications*.

When a high range water reducer (super plasticizer) is used, the maximum slump limit may be increased an additional 2 inches (50 millimeters) while the concrete is affected by the admixture.

Air Content Acceptance

All cast-in-place concrete above the finished ground line shall be air entrained. The air content shall be a minimum of 4.5 percent and a maximum of 7.5 percent, unless otherwise specified.

When commercial concrete is placed in sidewalks, curbs, and gutters, air content is very important. It is recommended that the inspector perform air content testing sufficient to ensure that the concrete has between 4.5 and 7.5 percent air entrainment.

The Contractor may elect to use air entrained concrete below finished ground line. If so, the 28-day compressive strength shall meet the requirements for the class of concrete specified.

Placement Time

It is the Inspector's job to ensure that:

- The concrete is placed in the forms as soon as possible after mixing, but no later than 1½ hours after cement is added to the mix.
- The concrete is always plastic and workable while being placed.
- The concrete is placed continuously with interruptions no longer than 30 minutes.
- Each layer of concrete is placed and consolidated before the preceding layer takes initial set. Initial set has begun if the vibrator will not penetrate the preceding layer under its own weight while being operated.

The discharge time may be extended to 1¾ hours if the temperature of the concrete being placed is less than 75 F (24°C). With the approval of the Project Engineer, this may be extended to two hours, if the temperature of the concrete being placed is less than 75 F (24°C). If it is apparent that the 30-minute time limit will be exceeded for a continuous pour, a construction joint should be established. The Olympia Service Center Construction Office shall be contacted when this occurs. A vibrator can be used to determine if initial set has taken place when evaluating the need for a construction joint as described previously.

In certain instances, it may be difficult to meet the above criteria due to long transit times. The *Standard Specifications* allow the Contractor the option of requesting in writing to extend the time for discharge. The extension of time will be considered on a case by case basis and requires the use of specific retardation admixtures and coordination with the Olympia Service Center Construction Office.

Point of Acceptance

Acceptance tests for specification compliance are to be determined from samples taken at the discharge of the placement system for bridge decks, overlays, and barriers, and at the truck discharge for all other placement. For bridge decks, overlays, and barriers, acceptance samples should be taken as close to the point of deposition as possible. (e.g., taking a sample from the end of a pump down below the bridge instead of up on the deck is not acceptable as it may have substantially different characteristics.)

If a pump is used as a placement system, the initial acceptance test must be delayed until the pump has been cleared of all initial priming slurry. Do not allow placement of pump slurry in the forms.

The Inspector should arrive in advance of the concrete placement and prepare the testing location. It is the Contractor's responsibility to provide adequate and representative samples of the fresh concrete to a location designated by the Engineer. Above all, the equipment must be in good working condition with records of the last calibrations for the airmeter and scales. The Inspector should have all the information, including the mix design, and all the forms needed for documentation of the placement operation.

Retesting Concrete

Once the Contractor has turned over the concrete for acceptance testing, no more mix adjustment will be allowed. The concrete will either be accepted or rejected.

Multiple Placements from One Concrete Truck

Only one set of acceptance tests are required per concrete truck.

6-2.3B Bridge Deck Construction

Bridge deck construction is critical because this part of the structure receives the most abuse from traffic and the environment. Construction of maintenance-free bridge decks requires close attention to details. One or two weeks

before placing the concrete in the deck, a placement conference should be held to go over the procedures to be used and to emphasize the critical areas of construction. As a minimum, this should include a discussion of the rate of placement, personnel and equipment and backup equipment to be used, type of finish, and curing details. The rate of placement should normally provide for at least 20 feet (6 meters) of finished deck per hour.

The position of the reinforcing steel is very important because of the thin concrete section. Adequate blocking and ties are necessary to hold the steel in place. If foot traffic on the reinforcing steel causes it to deflect, the spacing of the chair supports is not adequate. A pre-check of the screed setting for proper elevations and clearances to the reinforcing steel is essential prior to any concrete placement. The finishing machine should be run the full length of the placement after the screed is adjusted to check deck thickness and cover of the reinforcing steel, this check should also continue over all bulkhead and expansion joint to verify their clearances. The finishing machine should not be adjusted while it is finishing concrete to clear bulkheads and joint these adjustments must be made prior to the concrete placement. During the placement, frequent checks should be made of the actual cover obtained directly behind the finishing machine and recorded in the Inspector's Daily Report.

Quality concrete is required, particularly in the bridge deck. Uniform consistency of the concrete should be maintained throughout the placement. The water-cement ratio is very important. It should be the minimum possible to produce the required workability and not exceed the specification limit. To keep the water-cement ratio as low as possible, the specifications require the use of a water reducing additive for all bridge deck concrete. Frequent checks of the free water contained in the aggregates is necessary to determine the amount of water actually contained in the concrete mix.

6-2.3B(1) Placing Concrete in Hot Weather

When the concrete is being placed in the bridge deck during hot weather, additional precautions must be taken in order to prevent surface evaporation. See 6-02.3(6)A for estimated evaporation rates.

The temperature of the concrete at the time it is placed in the forms must be kept under 90 F (32°C). Concrete with high temperature looses slump rapidly and is difficult to place and finish. This temperature can be controlled by shading the concrete trucks while loading and unloading and shading the conveyors or pump lines used in placing the concrete. The forms and reinforcing steel should be cooled prior to placing the concrete. This can be done by covering them with damp burlap and then spraying them with cool water immediately prior to placing the concrete. Care must be taken to see there is no standing water in the forms when the concrete is placed.

Water reducing retarder admixture should be used in the concrete so the water-cement ratio and slump of the concrete can be maintained within the specification limits. The mixing time of the concrete should be held to the minimum. The concrete must be placed and finished as soon as possible. If there is a delay in applying the curing compound after the concrete has been finished, a fog spray should be applied to reduce the moisture loss due to evaporation. If plastic cracks form and the concrete is still in a plastic state, they can be eliminated by revibrating the concrete and refinishing. Care must be taken to not revibrate the concrete after initial set has been obtained.

The requirements for curing the concrete shall be enforced. As soon as the visible bleed water has evaporated from the finished deck, the curing compound should be applied. The curing compound should be applied in two applications to ensure full coverage of the concrete. The second coat should be applied in a direction perpendicular to that of the first application. The amount of curing compound applied in the two applications should meet the minimum amount specified. Immediately after application of the curing compound and initial set, the concrete deck should be covered in accordance with Section 6-02.3(11) of the *Standard Specifications*.

In summary, the difficulties arising from hot weather concreting may usually be minimized by:

1. Using cool mixing water.
2. Keeping the aggregate temperature as low as is economically feasible.
3. Reducing the length of mixing time.
4. Placing the concrete as soon as possible after mixing and with a minimum of handling.
5. Keeping the surfaces shaded during placing.
6. Placing curing compound as soon as possible.

6-2.3B(2) Placing Concrete in Cold Weather

Several precautions must be taken when placing concrete in cold weather. If temperatures below 35 F (2°C) are anticipated within seven days following placing the concrete, the Contractor will normally be required to enclose the structure and provide heat and moisture so the concrete will obtain its initial strength without freezing. The addition of moisture should be discontinued 24 hours before discontinuing the heat so there will not be an excess of moisture on the surface of the concrete to form ice in case of cold weather following the seven-day protection. If the temperature is below 35 F (2°C) when placing the concrete, the concrete must be heated to at least 60 F (16°C) by heating the aggregate and/or water in accordance with the *Standard Specifications*. The temperature of the concrete, as well as the slump, must be consistent from batch to batch.

When heating water and aggregates, the resulting temperature for a batch of concrete can be computed from the formula in Chapter 6-2.3A1 of this manual.

6-2.3C Use of Epoxy Resins

Quite frequently, the use of epoxy resin systems on our projects is considered; either at the design stage or during the progress of a contract. Generally this use is in connection with repair of distressed concrete or in setting rebar.

Epoxy resins are quite versatile materials and are capable of providing the answer to numerous bonding or grouting problems. However, like a number of products, there is a tendency to treat them as a universal cure-all and they occasionally are applied without proper consideration of inherent limitations.

Epoxy systems are capable of providing many different properties through the formulation of their various components. To a certain extent, the systems can be tailored to fit the particular need and conditions of time, temperature, humidity, etc., that will prevail. Use of a material under conditions beyond those for which it was formulated can result in considerable trouble rather than benefit. Probably the greatest potential for trouble exists in the use of epoxies at temperatures below which a normal reaction can occur. Generally speaking, unless a specially formulated epoxy is being used, trouble can occur when application is attempted below 50 F (10°C).

The Olympia Service Center Materials Engineer is available as a technical resource on the use of such systems, in the resolution of pertinent problems should they occur during preliminary design considerations, or as a result of problems during construction. It is strongly recommended that any contemplated use of epoxy resin systems at application temperatures below 50 F (10°C) be checked with the Materials Division to forestall potential difficulties.

If epoxy resin is used, the following elements need to be carefully checked by the Inspector:

- Proper mixing and curing of the epoxy resin.
- Temperature and/or moisture limitations of the epoxy being used.
- That the areas are clean and prepared in accordance with the manufacturers recommendations.
- That the epoxy covers the entire repair area.
- That the epoxy fills the entire space between bar and the hole (if bars are being set with epoxy resin).
- That the epoxy is still tacky (not set) when it is being used to bond two structural elements together (just before elements are put together).

For setting rebar or anchors, it is best to determine the volume required to be filled by the epoxy and measure the epoxy being used. A method of measurement should be agreed to with the Contractor for inspection purposes. Also, occasional samples should be taken of the epoxy resin being placed to be sure it is setting up properly. If there is any question of filling the void or adequacy of the epoxy resin, the Inspector shall advise the Contractor, document the discussion, and report it to the Project Engineer.

6-2.3D Finishing Structures

6-2.3D(1) General

As soon as possible after the forms are stripped, the concrete surfaces shall be examined and all lips or edgings where form boards have met, shall be removed with a stone or sharp tool. Bolt holes and rock pockets shall be filled with cement mortar and floated to a smooth finish. The mortar patch shall be the same color as the adjoining concrete surfaces. Finishing of concrete surfaces shall be done in accordance with the provisions of the *Standard Specifications* and Special Provisions.

The amount of work necessary to complete the finishing satisfactorily, depends entirely on the quality of the original concrete work. If the forms have been poorly constructed and the concrete surfaces are rough and uneven, it will be necessary for the Contractor to do sufficient rubbing and finishing after the forms are removed to secure a satisfactory job. Grinding leaves a surface that is off color and should be kept to a minimum.

6-2.3D(2) Formed Surfaces

The primary purposes of finishing formed surfaces are:

- To seal the surface from water and other elements that can rust or corrode metal ties and reinforcement within the concrete.
- To provide a uniform, pleasing appearance for surfaces that will remain visible to the public.

There are two different classes of finish. They are:

Class 1

- All rail bases, curbs, traffic barriers, pedestrian barriers, and ornamental concrete members.
- As designated in the Plans and in accordance with Section 6-02.3(14).

Class 2

- Required for all other surfaces.

See the *Standard Specifications* for additional requirements.

6-2.3D(3) Roadway Slabs

Finishing of roadway slab surfaces shall be as outlined in Section 6-02.3(10) of the *Standard Specifications*. The principal objectives to be attained are a good wearing surface and a smooth riding roadway. The Engineer should ensure that adequate preparation has been made to do a good job in accordance with the specifications.

The Engineer should insist that a float be available. When a good strike-off and finish has been obtained by a finishing machine, floating may be, and should be, kept to a minimum because excess floating can be detrimental. A light aluminum float carefully and sparingly used will not harm a well finished deck, but will expose poor adjustment and misuse of a good machine. It will also smooth out mortar ridges left by the finishing machine and seal the surface. **The Contractor is required to check the deck with a 10-foot (3-meter) straightedge immediately after it is floated.**

Low and high spots can possibly be corrected by operating the finishing machine over the area (if the concrete is still plastic).

The Engineer should be cautioned that hard floating of the concrete surface with aluminum floats may cause a chemical reaction between the aluminum and the fresh concrete which could decrease the strength of the concrete at the surface of the concrete. Excessive wear or pitting of the aluminum float could be an indication that chemical reaction is taking place between the float and the concrete.

It is important that the texturing comb be used when the concrete is at the proper consistency. If the concrete is too soft, it will not retain the proper texture obtained by the comb and, if the concrete is too hard, the proper texture will not be achieved. The comb should be set up and ready to use well in advance of the time it will be required. Surface texturing is normally done with a comb except when an overlay is required.

The finished and cured deck slabs must be checked with a 10-foot (3-meter) straightedge and corrected by cutting down the high spots and building up low spots until the entire surface comes within the specified tolerance.

Sidewalks shall be finished smooth with a wood float and then brushed with a fine bristle brush. Use an edger tool at all joints and edges. Block lines on sidewalk surfaces are not desired on structures.

6-2.3E Drilled Shaft Foundations

Drilled shaft foundation construction is often very technical and is always critical because the shafts are supporting the structure. Any shaft foundation malfunction will be devastating both economically and safety wise. Construction of maintenance free bridges requires close attention to details during the construction of drilled shaft foundations.

Training on shaft construction is available through the Olympia Service Center Construction Office. The training covers specifications, equipment, site geological conditions, and general questions.

At least one week before any drilled shaft foundation work is done, a conference should be held to go over the procedures and equipment to be used and to emphasize the critical areas of construction. As a minimum, this meeting should include a discussion of the contractor's shaft installation plan and order of work. In addition to this discussion, both WSDOT personnel and the Contractor's personnel should discuss specifics of the project; such as, site subsurface conditions, site access, traffic control, staging areas, excavation disposal, protection of the environment, etc.

Meeting attendees should include key personnel from WSDOT, the Prime Contractor, and the shaft drilling Contractor. The WSDOT personnel should include the Project Engineer representatives, a Geotechnical Engineer from the Olympia Service Center Materials Laboratory, and a representative of the Olympia Service Center Construction Office.

6-2.3F Curing Concrete

Proper curing of concrete is important to securing strong, good wearing concrete and in reducing cracking. Curing periods and methods specified should be strictly observed.

The last step in ensuring a good concrete job is to provide proper curing. Concrete begins to cure from the time cement and water are added in the mixing chamber and continues for many years after. Concrete is very susceptible to damage during initial curing, if proper steps are not taken. Three of the most important factors are:

1. Surface drying (evaporation).

2. Rapid temperature changes between segments of the concrete as it is curing.

3. Stresses or loads applied before the concrete has reached adequate strength.

All of the specifications regarding curing, form removal, hot and cold weather concreting, etc., are designed to provide protection for the concrete during this critical stage. For example: If the surface begins to dry, the surface will begin to shrink and cracking can occur. To prevent this, the Inspector should be aware that fog misting, curing compounds, wet blankets, plastic sheeting, etc., are designed to be applied **before** surface drying begins to prevent loss of surface moisture. Some concrete mixes such as microsilica and latex are very susceptible to surface drying and require closer attention due to the effects of thin lift application.

Note: Curing compounds are not chemicals that cure concrete. They prevent water loss by forming a waterproof membrane.

Like most materials, concrete expands when heated and contracts when cooled. Therefore, the concrete should not be subjected to extreme temperature changes as hardening takes place.

Hardening of concrete is also slowed down by cooler weather. Concrete must not be exposed to freezing conditions to avoid permanent damage.

Concrete (as it hardens) contains a high percentage of moisture and could crack if the water in the mix freezes and expands. Air entrainment will not protect the concrete from damage during the initial curing period.

Summary

1. Prevent surface moisture loss.
2. Maintain constant temperature (no freezing).
3. Prevent stress loads.

6-2.3G Test Cylinders

Concrete test cylinders shall be molded in forms conforming to the requirements for single use molds as detailed in ASTM C470, or in steel or plastic molds meeting the requirements of reusable vertical molds as detailed in ASTM C31. Cardboard test cylinder molds shall not be used.

See Chapter 9 of this manual for instructions for making, curing, and shipping concrete test cylinders and for the number of test cylinders to be made.

Extra cylinders that are tested for early removal of forms and falsework shall be the responsibility of the Contractor. Early cylinders are cylinders tested in advance of the design age of 28 days. Their purpose is to determine the in place strength of concrete in a structure prior to applying loads or stresses. The Contractor shall retain an independent testing laboratory to perform this work. This lab shall be approved by the Engineer.

The cylinders shall be cured in accordance with WSDOT Test Method 809, Method 2. Special cure boxes to enhance cylinder strength will not be allowed. The number of early cylinder breaks shall be in accordance with the Contractors need and as approved by the Engineer.

Prior to the removal of any forms, the Contractor is required to furnish the Engineer with all test results. Forms shall not be removed without approval of the Engineer.

If set retarders are used in a mix, the Olympia Service Center Materials Lab should be consulted for curing, handling, and storage instructions prior to use.

6-2.4 Concrete Seals and Cofferdams

When constructing foundations in streams and other locations below water, it is usually necessary to place a concrete seal in the cofferdam so that the cofferdams may be dewatered. The weight of the concrete seal resists the buoyant force on the cofferdam when it is dewatered. Seal concrete is placed underwater by means of a tremie. Concrete pumps may be used.

Handling of the tremie requires the use of a crane to raise and lower it into place. Hand winches are sometimes used in small seals but they must be equipped with a brake and drum for quick release and stop.

The tremie pipe shall be at least 10 inches (250 millimeters) in diameter, made of heavy steel pipe, with flange or sleeve connections. Sleeve connections are preferable for seals placed in pile foundations. Flanges sometimes hang up on tops of piles and the concrete charge is lost. The tremie pipe must be absolutely water tight, at the joints as well as at the connections to the hopper. The hopper should be of at least, yard (one-half cubic meter) capacity.

Before any concrete is placed, the bottom of the tremie pipe shall be sealed with a plug. A satisfactory plug can be made with a 2-inch (50-millimeter) board slightly larger in diameter than the tremie pipe; on top of this board fasten a $^3/_4$-inch (19-millimeter) round piece cut to the neat size of the inside of the pipe. Place a piece of cloth or burlap over the end of the pipe and drive the plug in place. Lower the tremie until the plug rests on the bottom, then fill the tremie pipe with concrete. When the tremie is raised the weight (mass) of the concrete will push out the plug. The plug can be salvaged by fastening a piece of wire to it before it is lowered into the water.

Further details for handling a tremie are found in Section 6-02.3(6)B of the *Standard Specifications*.

The thickness of seals without piling are generally not less than 0.43 times the height of high water above the bottom of seal. Seals in footing with piling require special design. The thickness of the seal is computed for the water elevation shown in the plans. The cofferdams must be designed and vented for this elevation. The design and vent elevations are noted in the plans. If concrete is placed in the seal during a period of high water, the dewatering of the cofferdam will have to be delayed until the water level drops to the vented elevation. No change in the vent elevation shown in the plans shall be allowed without approval from the Olympia Service Center Construction Office. Such approval should be obtained before the cofferdam is designed. All cofferdams must be vented at the elevation used for computing the seal thickness in order to prevent an unsafe hydrostatic pressure on the seal. Cofferdams shall not be dewatered before the concrete has been placed and cured.

The vertical sheathing of the cofferdam or shoring shall extend below the bottom of the excavation in accordance with the approved working drawings. Sheet piles in cofferdams shall be placed tightly together so that there will be no flow of water through the cofferdams while seal concrete is being placed.

The tops of seals should slope slightly toward one end. At that end, provision shall be made for a sump for the pump intake. Cofferdams should be tightly constructed so that a minimum of pumping is required after the cofferdam has been dewatered. Space for water courses shall be provided on top of the seal and around the footing block, between the footing block and the walls of the cofferdam.

Before starting to place seal concrete, all equipment should be checked to see that it is in good working order. It is necessary that concrete in a seal be placed continuously until completion, with the end of the tremie always extending into the fresh concrete.

It is not desirable to leave cofferdam struts and waling in the seal concrete but it is sometimes necessary to do so, especially in soft foundation material, when a set of struts and waling is required near the bottom of the cofferdam. The concrete displaced by such struts and waling is not deducted from the Contractor's pay items.

After the cofferdam is dewatered, a film of scum or laitance will usually be found on top of the seal. This must be cleaned off before the footing concrete is placed. If the seal is designed as a footing, the laitance will have to be removed only from the areas that will support pier shafts, columns, or walls.

6-2.5 Pier, Column, and Wall Concrete

Concrete in all reinforced footings shall be placed in the dry. All reinforcing, including vertical wall or shaft bars and dowels, shall be securely fastened in place before placing of concrete begins. Driving of dowel bars into concrete must not be permitted, except in seal concrete when the seal is also the footing block, but they must be placed immediately after the concrete is placed. The placing and spacing of footing reinforcing steel is as important as in any other part of the structure.

Care must be exercised in placing reinforcing steel in the columns where it splices with the dowel bars into the footings. In many instances, if the dowel bars and column bars are not carefully placed, there is not enough space between the steel bars for proper placement of concrete. Considerable care must be taken in placing and vibrating the concrete in the columns so that no rock pockets are formed. Column details must be strictly adhered to since they are critical to the earthquake resistance of the bridge.

Care must be taken in placing and vibrating the concrete of sloping walls or columns to get proper consolidation and to avoid rock pockets.

Concrete shall be placed in one continuous operation from top of footing to bottom of pier cap or crossbeam unless construction joints are shown in the plans or preapproved by the Olympia Service Center Construction Office. Concrete shall be placed at the rate for which the formwork is designed. This rate, in feet of height (meters of height) per hour along with the concrete temperature, should be stated on the approved falsework plans. Spacing of studs, wales and form ties shall be as shown on the approved falsework plans. Rails, barriers, and parapets on retaining walls shall not be placed until all backfilling is completed. Vibrators shall be used at all times when placing concrete, unless otherwise specified.

6-2.6 Concrete Structures

6-2.6A Forms and Falsework

The forms for the structure shall be constructed in accordance with the approved falsework and form plans and the requirements of Section 6-02.3(17) of the *Standard Specifications*. In general, the forms used for all concrete surfaces which will be exposed, shall be faced with plywood. All plywood used shall be exterior type except where CDX is allowed by the specifications. All forms have to be strong enough to hold the plastic concrete in place until it has hardened. Forms should be designed to permit easy removal without damage to the concrete. Forms are a critical part of the concrete bridge construction process. Generally, the factor of safety used for design of forms is less than that of permanent construction. Therefore, it is extremely important that the forms are constructed in accordance with the approved form drawings. Any changes to the approved form drawings shall be reviewed and approved by the Bridge and Structures Office.

The Contractor is responsible for designing and constructing the forms and falsework for fixed-form concrete. The Contractor must submit detailed plans (refer to Chapter 6-1.5 of this manual):

- For departmental approval;
- Except for footings and retaining walls less than 8 feet (2.4 meters) in height. See Section 6-02.3(16) of the *Standard Specifications*.

Prior to placing concrete, the Inspector should verify that all forms:

- Provide forming faces that are:
  - Smooth and firm;
  - Clean of dirt, laitance, oil, or any other material that would contaminate or discolor the concrete;
  - Treated with an approved form-release agent;
- Are mortar tight to avoid any leakage (including tape or caulking if needed for surfaces that will require Class 2 finish);

- Are constructed in accordance with the approved forming plans;
- Are adequately rigid and well supported to hold and retain the concrete without distortion or displacement;
- Are set at the locations, dimensions, lines, and grades as specified in the plans.

If wood forms are used, see that plywood is used for the form faces with:

- The joints and grain generally in line with the line of the structure.
- The face grain of the plywood running perpendicular to the supports.
- No offsets or projections that would leave an impression in the concrete surface.

Also verify that:

- Uniform chamfer strips are set at the correct line and grade as required for filleted edges.
- Adequate tie rods, snap-ties, hairpins, studs, walers, and braces are securely placed as needed support.

If metal or fiberglass forms are used, the same basic requirements apply, but particularly check for:

- Any dents or other defects that would harm the uniformity of the concrete surface.
- Any rust or other foreign material that would discolor the concrete surface.
- Countersunk bolts and rivet heads.
- Adequate support clamps, rods, and pins.

Prior to placing any reinforcing or concrete loads on the falsework, verify that:

- The bottom of the falsework is set on a solid foundation, with mudsills, minimum pile diameter, etc., all constructed per approved plans.
- The upper portion provides firm, uniform support.
- Devices such as screws-jacks and wedges are used to hold the forms at the correct elevation, and that they are free from defects, and undamaged or not bent.
- When wedges are used, they are placed in pairs to provide uniform bearing.
- The falsework construction is in accordance with the approved falsework plans and the *Standard Specifications*.

Major failures with loss of life have occurred as a result of poor falsework and formwork construction. It is critical that the Inspector check these temporary structural elements very carefully. Any deficiencies must be corrected before construction loads are applied. If there is a question, the Bridge and Structures, Construction Support Engineer, or the Olympia Service Center Construction Office should be contacted.

Suggested acceptance tolerances are as follows:

1. Bridges and similar structures:

   a. Variation from the plumb or the specified batter in the lines and surfaces of columns, piers, walls and abutments

Exposed, in 10 ft. (3 m)	1/2 in. (13 mm)
Backfilled, in 10 ft. (3 m)	1 in. (25 mm)

   b. Variation from the level or from the grades indicated on the drawings in slabs, beams, horizontal grooves, and railing offsets

Exposed, in 10 ft. (3 m)	1/2 in. (13 mm)
Backfilled, in 10 ft. (3 m)	1 in. (25 mm)

   c. Variation in cross-sectional dimensions of columns, piers, slabs, walls, beams, and similar parts

Minus	1/4 in. (6 mm)
Plus	1/2 in. (13 mm)

   d. Variation in thickness of bridge slabs

Minus	1/8 in. (3 mm)
Plus	1/4 in. (6 mm)

   e. Footings: Variation in dimensions in plan

Minus	1/2 in. (13 mm)
Plus	2 in. (50 mm)

   f. Misplacement or eccentricity

2 percent of the footing width in the direction of misplacement but not more than	2 in. (50 mm)

   g. Reduction in thickness

Minus	5 percent of specified thickness

   h. Variation in the sizes and locations of slab and wall openings 1/2 in. (13 mm)

Forms for concrete surfaces which will be exposed shall be treated with a parting compound consisting of a chemical release agent. Form oil or other oils shall not be used. The parting compound shall be applied before the reinforcing steel is placed. The forms shall be thoroughly wetted on both sides in advance of placing the concrete.

The basic requirements for the removal of any forms and falsework are that:

- The curing temperature was above 50 F (10°C) during the cure period and that strength is adequate.
- No forms or falsework may be removed until authorized by the Engineer.
- All forms and falsework must be removed unless there is no access for removal (i.e., inside a box girder bridge).
- All forms and falsework must be removed in a manner that will not damage the structure.

Timing is a key consideration in the removal of forms and falsework. In terms of curing, the concrete, forms, and falsework must remain until the concrete has sufficient strength to support itself. For finishing purposes, it is generally better to remove the forms as early as possible to finish the surface while it is still green. Therefore, the timing of falsework and form removal depends largely on the type of structure as well as how it is cured and finished.

For example:

- Side forms — not load bearing — at least 24 hours for:
    - Footings, if curing compound applied to complete cure;
    - Steel or dense plywood if: (1) water reducer in mix; (2) low-slump mix, (3) 1,400 psi (9650 kPa) compressive strength, and (4) wet cure for balance of three days;
    - Otherwise three days minimum.
- Release of falsework — supporting weight (mass) of concrete (see *Standard Specifications*).

6-2.6B Traffic Barrier, Pedestrian Barrier, and Rail Bases

On some projects, the Contractor has the option of using slipform techniques in addition to the usual fixed forms as specified in Sections 6-02.3(6), 6-02.3(11)A, 6-02.3(24)C, 6-10.3(2), and 9-03.1(2)B of the *Standard Specifications*.

In either method, barriers and rail bases should be carefully aligned both horizontally and vertically to give a pleasing appearance; refer to Section 6-01.4 of the *Standard Specifications*. The vertical adjustment for the pleasing appearance is intended for localized camber and deck profile variables. This **adjustment is not intended to eliminate grade breaks, such as vertical curves and superelevation transitions**. In reinforced cast-in-place concrete box girder, flat slab, and Tee girder bridges, approximately one-half the residual dead load camber should be built into the barriers and rail bases. None is required for prestressed girder bridges; I-girders, Bulb-T, etc. In other types of bridges, a recommendation should be obtained from the Olympia Service Center Bridge and Structures Engineer on the appropriate camber adjustment.

The Project Engineer should plot to a large scale the profiles of the roadway grades at the curb lines. From these profiles, the grades for the tops of traffic barriers, pedestrian barriers, and rail bases can be properly determined. A slight hump in the barriers or rail base over the whole bridge is not usually objectionable.

On the safety-shape traffic barriers, some of the height variation may be accommodated in the vertical face at the base. Any height variation shall maintain the 2-foot 8-inch (815-millimeter) total height. The vertical toe face at the base is usually 3 inches (75-millimeters) unless the structure is receiving an immediate overlay. To accommodate the overlay, the vertical face at the base is increased to 3 inches (75-millimeters) plus overlay thickness. The front face geometry of the safety-shape traffic barrier is critical and should not be varied except as noted herein. Ideally, all height adjustment required to provide a pleasing appearance should be accomplished by modifying the total height of the traffic barrier by varying the vertical toe face at the base, i.e., 2-inch (50-millimeter) minimum. The front and back faces of the traffic barrier are parallel on the upper part to accommodate all height adjustment necessary. The 7-inch (175-millimeter) height of the intermediate sloping face shall be maintained. To ensure proper alignment, carefully check the top of forms or the Contractor's control wire prior to placing concrete.

On slipformed traffic barriers and pedestrian barriers, the same cross-section as shown for fixed-form construction shall be used, except the top chamfer may be shaped to a 3/4-inch (20-millimeter) radius. Although slipforming may be allowed in the contract, the reinforcing steel bars may not be sufficient to resist the forces during the concrete placement operations. The contractor should evaluate the stiffness of the reinforcing and, if necessary, provide additional reinforcing steel crossbracing, both longitudinally and transversely. Slipformed concrete is usually placed with a slump of 1 1/4 inches (30-millimeters) plus or minus 1/4 inch (6-millimeters). This slump is critical and should be carefully controlled by the Contractor. It is not unusual to encounter conditions which produce sections of unsatisfactory barrier or rail base due to slump, finish, alignment or other problems. When this occurs, do not hesitate to have the unsatisfactory sections removed. Occasional removal is inherent in slipform construction.

Placement of the reinforcing steel bar cage to ensure adequate concrete cover and proper reinforcing bar location is very important and difficult to check for slipformed

traffic barrier, pedestrian barrier, and rail bases. When fixed forms are used, final adjustment of the reinforcing steel bar cage can be accomplished after the forms are set prior to concrete placement. The slipform method does not present this opportunity. For that reason, Section 6-02.3(24)C of the *Standard Specifications* requires that the Contractor check reinfocing steel bar clearances and placement prior to slipform concrete placement. This check can be accomplished by either the use of an approved template or by operating the slipform machine over the entire length of the barrier. The final grade control must be set prior to the check. All reinforcing steel deficiencies must be corrected by the Contractor. Once the deficiencies are corrected, the Contractor may begin slipform concrete placement after he has the Project Engineer's approval.

6-2.6C Reinforcing Steel

For most concrete structures, some type of reinforcement is required to resist high tension stresses. Reinforcing materials include:

- Uncoated deformed steel bars, which are most commonly used.
- Other types, such as welded wire mesh, epoxy-coated bars, wire, prestressing cable.

(**Note:** Epoxy-coated bars require special handling to prevent damage to the coating.)

- Wire ties and other devices to securely hold the reinforcement in place.

The Contractor is responsible for determining and ordering quantities from the plans.

As reinforcing steel is delivered and stored at the project site, the Inspector should verify that:

- All positioning, spacing, sizes, lengths, shapes, and splice locations conform with the plans.
- Any field bending is done as specified and any cracked or split bars are rejected. If in doubt, reject the bar in question.

The Inspector should verify that the reinforcing placed is:

- Tied at all intersections if bar spacing is 1 foot (300-millimeters) or more.
- Tied at alternate intersections if spacing is less than 1 foot (300-millimeters).
- Supported in accordance with the *Standard Specifications*.
- **Tack welding is not allowed. It can severely damage the reinforcing steel.**
- Check that clearances between the forms and the reinforcement are within 1/4 inch (6-millimeters) of those specified in the plans.
- Check that splices are located and constructed only as shown in the plans using either:
  - Lap splicing:
    - Not permitted for No. 14 or No. 18 bars.
  - Welded splices:
    - Special inspection is required (steel fabrication inspector).
    - Advance approval of welding procedures.
    - By certified welders (test welds).
  - Mechanical splicing (if allowed in the plans):
    - This type of splice must be approved by the Olympia Service Center Materials Lab before use.
- Check that reinforcement is securely supported and held in place as follows:
  - By preapproved metal or plastic chairs, hangers, support wires, or mortar blocks that are at least as strong as the structure (mortar blocks require manufacturer certification or cubes for compressive strength testing).
  - With such supports having the correct dimensions to provide the required clearances.
- Check that all damaged epoxy-coated rebar is repaired in accordance with the *Standard Specifications*.

See the *Bar Identification Guide* (Figure 6-2) for proper identification of rebar at the job site.

The ASTM specifications for billet-steel, rail-steel, axle-steel, and low-alloy steel reinforcing bars (A 615M, A 616M, A 617M, and A 706M respectively) require identification marks to be rolled into the surface of one side of the bar to denote the producer's mill designation, bar size, type of steel and minimum yield designation. See Figure 6-2. Grade 60 (400) bars show these marks in the following order:

1st — Producing Mill (usually a letter)

2nd — Bar Size Number (#3 through #18)

3rd — Type Steel:

- S for Billet meeting Supplemental Requirements S1 (A 615M)
- N for New Billet (A 615M)
- R for Rail meeting ASTM A 617M, Grade 60 bend test requirement (A 616M) [per ACI 318-83]
- I for Rail (A 616M)
- A for Axle (A 617M)
- W for Low-Alloy (A 706M)

4th — Minimum Yield Designation

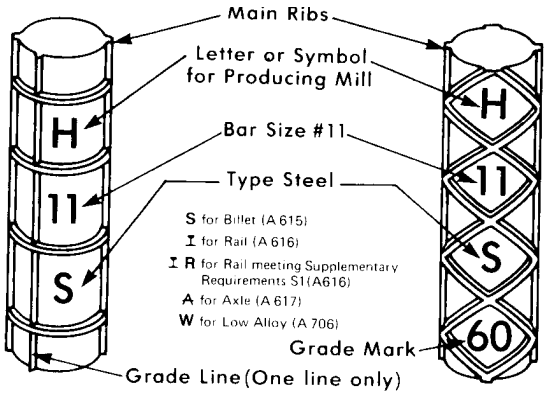

GRADE 60 (400)

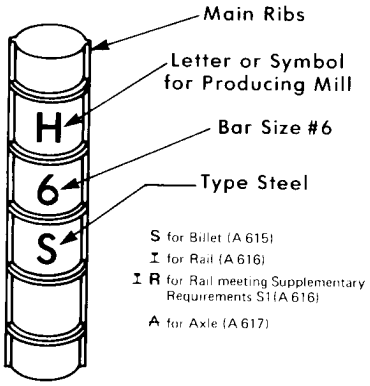

GRADE 40 (300) AND 50 (350)

Figure 6-2

Minimum yield designation is used for Grade 60 (400) bars only and can either be one (1) single longitudinal line (grade line) or the number 60 (grade mark).

A grade line is smaller and between the two main ribs which are on opposite sides of all U.S. made bars. A grade line must be continued at least 5 deformation spaces. A grade mark is the 4th mark on a bar.

Grade 40 (300) and 50 (350) bars are required to have only the first three identification marks (no minimum yield designation).

Bar identification marks may be oriented as illustrated or rotated 90 degrees. Grade mark numbers may be placed within separate consecutive deformation spaces. Grade line may be placed on the side opposite the bar marks.

Reinforcing steel shall be placed in position as shown on the plans and held securely dring the placement of the concrete. The strength of a reinforced concrete structure depends not only upon the amount of steel placed but also on its proper location. Improper location of the steel can impair the strength of the structure.

In instances where reinforcing steel is shown in detail in specific relationship to other material and details such as inserts, openings, etc., the Inspector should make sure that this relationship exists when inspecting the placement of the reinforcing steel. If the shown relationship is impossible to maintain or results in a conflict with other details, the Olympia Service Center Construction Office shall be consulted to obtain clarification of the details.

The reinforcing steel shall be securely blocked from the forms by means of small mortar blocks, with a groove or tie wire embedded, not more than 2 inches (50-millimeters) square, or by other approved devices. If metal chair supports are used as supports for steel reinforcing bars, all surfaces of the chair supports not covered by at least 1/2-inch (13-millimeters) of concrete shall be treated in accordance with the requirements of Section 6-02.3(24)C of the *Standard Specifications*.

Runways for wheelbarrows or concrete buggies used in placing concrete shall not be supported on the steel reinforcing bars.

Steel delivered to the job far in advance of its use should be sored under cover to prevent rust. Mill scale is sometimes present on the reinforcing steel to such an extent that it must be removed. This is especially true with the larger bars. Removal can usually be accomplished by the use of wire brushes or by tapping the bars with hammers. Hardened concrete mortar must be removed from the reinforcing steel before placing the concrete. All reinforcing steel shall be in its proper place before concrete is placed. Driving of dowels, rail bars, etc., into concrete (wet setting) shall not be permitted. See the *Standard Specifications* for further details.

Before concrete is placed, the reinforcing steel shall be inspected to see that it conforms to the plans and that the steel is properly fastened in position. The amount of cover of concrete over the reinforcing steel in bridge roadway slabs is critical. The Inspector must verify compliance with plan dimensions in the slabs by an adequate number of measurements of the steel reinforcing bar locations in the forms before and immediately after placing concrete. These measurements can be taken at the same time checks on the depth of the concrete in the slabs are taken. These measurements shall be recorded as to depth and location and made a part of the project construction documents.

When steel reinforcing bars protruding from columns or walls are exposed to weather for several months, they rust and exposed surfaces below become stained with rust. To prevent this, the bars should be protected to prevent rust. Coatings used for this purpose may prevent adequate bonding of concrete to the steel bars and should be removed from the bars before concrete is placed, except as allowed by the *Standard Specifications*.

6-2.6D Welding Reinforcing Steel

Reinforcing bars shall not be welded unless welding is indicated in the plans or special provisions. If welding is specified, the WSDOT welding inspector must be contacted for purposes of certifying welders and procedures. Reinforcing bars which are to be welded must be furnished of steel which is suitable for welding as specified.

Only operators qualified as specified in Section 6-02.3(24)E of the *Standard Specifications* shall be allowed to weld reinforcing steel.

AWS specifications require that Low Hydrogen type electrode (welding rod) be used for welding reinforcing steel. Generally, grade E7018 electrodes shall be used for grade 40 (300) reinforcing bars and grade E8018 electrodes shall be used for grade 60 (400) reinforcing bars. If semiautomatic welders are used equivalent grade electrodes shall be used. It is important that moisture be eliminated from the electrode and the steel reinforcing bars. The electrode must be prepared as called for in Section 6-03.3(25) of the *Standard Specifications*. To do this, a drying oven is essential and must be available and used at the site where welding is done.

The recommended procedure for welding steel reinforcing bars is given in Section 6-02.3(24)E of the *Standard Specifications*. The Contractor shall submit a welding procedure to the Engineer for approval. The Project Engineer shall transmit the Contractor's welding procedure to the Olympia Service Center Bridge and Structures, Construction Support Engineer for review.

6-2.7 Prestressed Concrete Girders and Piles

Shop inspection of the manufacturing process of prestressed concrete products will be done by an inspector working under the direction of the Olympia Service Center Materials Engineer. The Materials Laboratory has instituted a procedure of inspecting each prestressed concrete plant in the State on an annual basis. During this inspection, the Materials Laboratory obtains a list of the sources of the component parts to be used in manufacture of the prestressed concrete members. When the Contractor submits a request for approval of source of prestressed products, the complete member and the prestress plant which will manufacture it need only be listed.

The Inspector prepares a weekly Fabrication Progress Report and Inspectors Daily Report, and submits them to the Project Engineer for information and records. When the prestressed unit is completed, including finishing, the Inspector will attach an Approved for Shipment tag, and/or the girder will be stamped with an "approved for shipment" and a lab I.D. number. The Approved for Shipment tag properly signed and dated or the "approved for shipment" and a lab I.D. number will be the Project Engineer's basis for accepting the product at the job site. The Project Engineer will be required to inspect the item only for any damage which may occur during shipment or after the item arrives at the job site.

Finishing of concrete surfaces of prestressed units shall be in accordance with Sections 6-02.3(14) and 6-02.3(25)F of the *Standard Specifications* unless specifically changed by the special provisions. The Shop Inspector shall require that the finishing done in the shop is in accordance with the specifications.

Prestressed concrete girders shall be maintained in a plumb, upright position at all times and shall be lifted by means of the lifting strands provided at the ends of the girders. All prestressed girders have been designed for a vertical pickup at the ends as indicated in the contract plans, and any other method will induce stresses which could cause failure of the girder during pickup. Some deviation from the vertical is safe for some girders. If the Contractor wishes to deviate from the vertical pickup, they shall have the proposed method analyzed by their engineers and shall submit the method, with supporting calculations, for review. The Project Engineer submits the calculations to the Olympia Service Center Construction Office for review. If the girders are broken or damaged during handling or erection, they will have to be replaced at the Contractor's expense.

The girders shall not be placed on the finished piers or abutments until the concrete in the piers or abutments has obtained at least 80 percent of its design strength. If grout pads are required, they shall be constructed and cured as

required by the plans and specifications before placing the girders. If elastomeric bearing pads are required, the lower contact surface of the pads must be bonded to the structure with an approved rubber cement to hold them in the position shown in the plans.

The girders must meet the dimensional tolerances listed in Section 6-02.3(25)I of the *Standard Specifications*.

6-2.7A Shop Inspection of Prestressed Concrete Products

The Contractor is required to submit five sets of the shop detail plans to the Project Engineer for approval. The Project Engineer shall check these plans for compliance with the contract plans and specifications. The Project Engineer shall only approve the shop plans for standard series "I" girders and for the concrete piling shown in Standard Plan E-4 or E-4a. No deviations shall be approved without written approval of the Bridge and Structures Engineer (or Terminal Design Engineer for Ferries Division projects). The shop drawings for all other precast piles or prestressed concrete products shall be approved by the Bridge and Structures Engineer (or Terminal Design Engineer for Marine Division projects).

The approved shop detail plans shall be distributed as follows:

A. Project Engineer (or Terminal Design Engineer) Approved:

2 sets retained by the Project Engineer (or Terminal Design Engineer)

1 set to the Contractor

2 sets, along with the contract plans and special provisions, to the Olympia Service Center Materials Engineer

B. Bridge and Structures Engineer (or Terminal Design Engineer) Approved:

1 set retained by the Bridge and Structures Engineer (or Terminal Design Engineer)

4 sets to the Project Engineer, who will forward one set to the Contractor, and two sets to the Olympia Service Center Materials Engineer who will forward the shop drawings and a set of contract plans and special provisions to the Prestressed Plant Inspector

Manufacture of these members shall not begin until the Contractor has received approval of the method, materials, and equipment they propose to use in the prestressing operations. Deviations from the approved shop drawings shall not be permitted unless approved in writing in advance of use.

Welding of the reinforcing bars will not be permitted unless shown in the contract plans.

The Olympia Service Center Materials Lab has published a manual entitled "Inspectors Guide for Prestressed Plant Inspection and Quality Control" which contains more detailed instructions for this work.

6.2.7B Prestressed Girder Camber

Precast prestressed girders start creeping up immediately after prestressing strands are released in the casting bed. Over time, creeping or girder deflection upward continues. Bridge plans estimate the expected creep at 120 days, from prestress release to deck placement, and designate the letter "D" for this deflection. Theoretical girder camber at mid span vs. actual girder camber measured in field, after girder erection, should be compared for compliance with *Standard Specification* 6-02.3(25)k.

The camber diagram is a parabolic curve. In order to have a smooth vertical profile the pad dimension on top of girder flange varies through the length of span (see Figure 6-3). This dimension is usually least (depending on the vertical profile curve) at center span and maximum at center line of bearings which bridge plans refer to as "A" dimension. The designation "C" is the amount of camber added to the deck grades to account for the anticipated downward girder deflection due to all superimposed loads (slab, overlay, sidewalks, utilities and traffic barriers).

Finished roadway grade elevations should be calculated along the center line of the prestressed girders at tenth point of each span. Camber values at tenth point stations need to be added to the finished profile grades to compensate for the girder deflection due to superimposed loads. These elevations are needed for setting deck slab forms and finishing screeds. Equation 6-1 calculates the camber at any point along the span.

$$\mathbf{Y = C - 4C\,(M - 0.5)^2} \qquad \text{(Equation 6-1)}$$

Y = camber at any point along the span length in inches (mm)

C = deflection due to superimposed dead load at span mid point in inches (mm)

M = location of span in decimal percent

The following example shows how tenth point span camber can be calculated.

Example:

Calculate camber at 0.20 point span for a prestress girder when girder length (ctr. - ctr. bearing) is 174.2 feet (53.085 m) and "C" dimension at mid span given as 3 inches (75 mm) (see Figure 6-4).

$$Y = 3 - 4(3)\,(0.20 - 0.5)^2$$

$$Y = 1.92 \text{ inches (48 mm)}$$

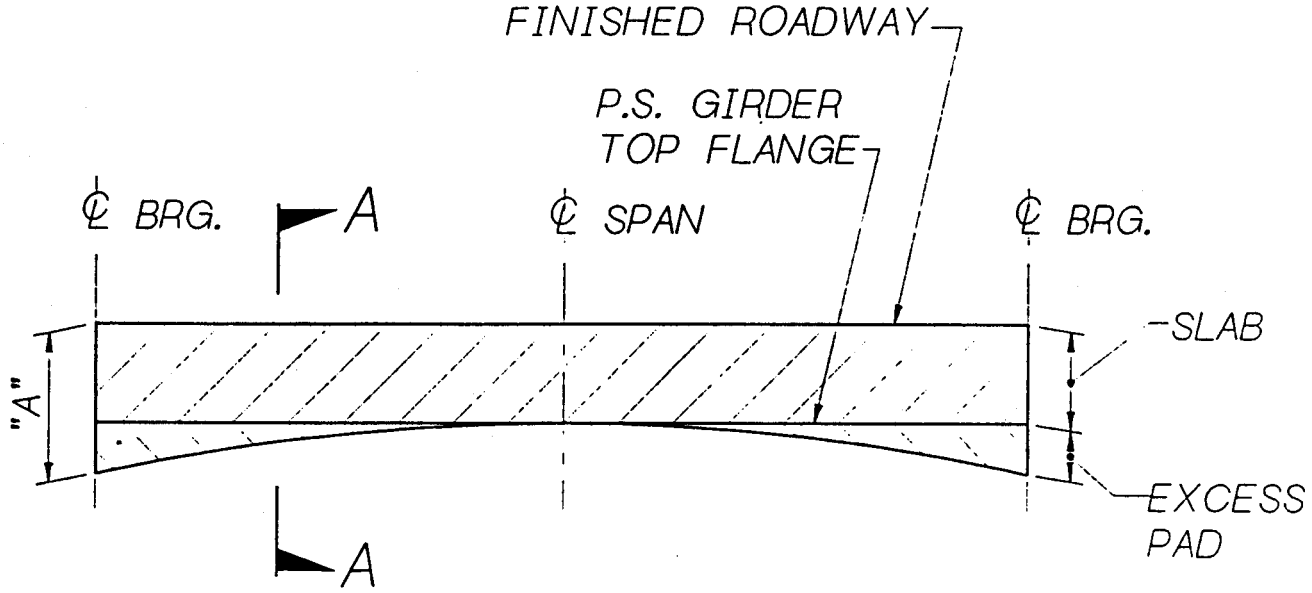

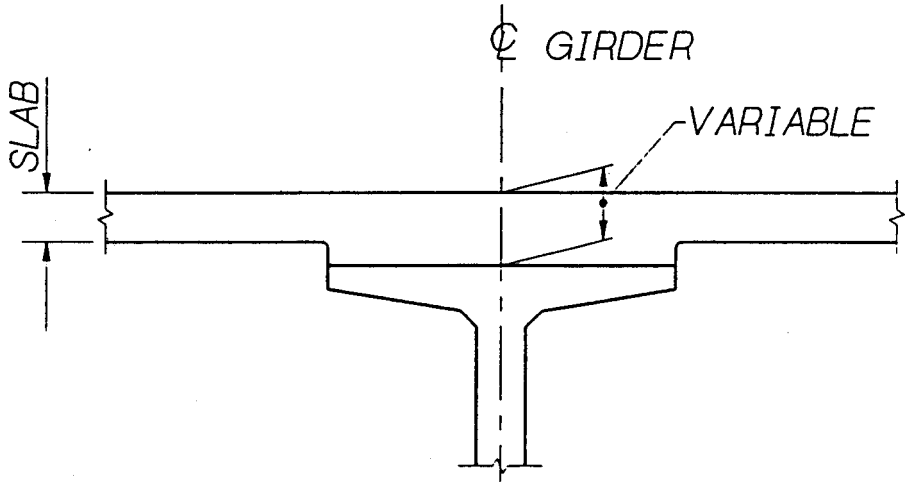

Section A-A

Elevation
Figure 6-3

6-2.8 Post-Tensioned Bridges

The construction of cast-in-place post-tensioned bridges requires considerable attention to details of construction by the Contractor and Inspectors. **The Olympia Service Center Construction Office is available to present job-specific training on post-tensioned bridges**. They should be contacted after the post-tensioning shop drawings have been approved and before post-tensioning ducts and anchors are to be placed.

In addition to the falsework and form plans for the structure being approved by the Bridge and Structures Engineer, post-tension detail plans shall be submitted for approval as shown in the Shop Plans and Working Drawings Table in Chapter 1-2.4I of this manual. Included in these details will be the anchoring details, jacking forces, lift off forces, tendon profile, elongation of the tendons, and the tendon stressing sequence. In many structures, the dead load of the structure is increased at the jacking ends during the jacking operation. In these cases, the falsework at the jacking ends must be designed to carry the additional dead load.

The installation of the post-tension system begins with the placing of assemblies consisting of bearing plate, transition cone or trumpet and grout inlet. Duct sections consisting of rigid conduit are assembled with couplers and are tied to the stirrups. Anchorages and bearing plates are securely fastened to the forms to prevent movement and loss of mortar during concreting. Connections between trumpets and ducts, ducts and couplers, and ducts and vent saddles are taped with a durable and waterproof tape to prevent intrusion of mortar.

It is necessary that the ducts be located in the position shown in the approved post-tension details in order for the structure to function as designed. A misaligned duct will cause increased friction and localized stress which can result in failure of the member during the stressing operation. The Inspector must check to see that the ducts are properly located and securely fastened in place to prevent movement during concreting.

On continuous structures, vents must be placed at the high and low points of the tendon and grout inlets at the ends of the tendon.

At the completion of the duct installation and prior to placement of concrete in the top slab, a device of slightly smaller diameter than the inside diameter of the duct shall be blown through the ducts to ensure no undetected damage or blockage has occurred (see *Standard Specifications* Section 6-02.3(26)C).

The prestressing reinforcement strand is delivered to the site in sealed reel-less packs or reels containing desiccant to prevent corrosion. It is necessary that the prestressing reinforcement is free of rust and kept clean while it is assembled, stressed, and grouted. Normally, the grouting shall take place within 10 days of the time the strand is removed from the packs to prevent the accumulation of rust. The Inspector should check the reels of strand intended for use and reject those which show damage to the strand or visible rust. See Section 6-02.3(26)D of the *Standard Specifications* for further requirements.

Some projects may be designed for the use of high strength steel rods instead of the strand. These rods come in various sizes to give the required steel area for the tendon in one bar instead of bundling several strands in the tendon.

Jacking operations shall not be started until the concrete in the structure has cured for the specified time or reached the specified strength. Jacking shall be carried out in the sequence shown on the approved post tension details to minimize the amount of eccentric loading on the structure.

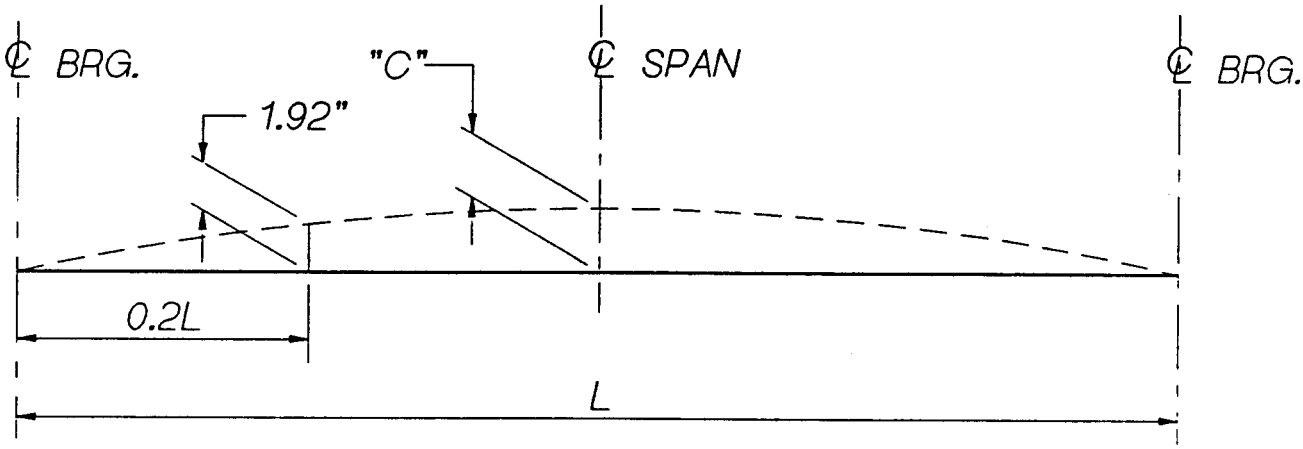

Figure 6-4

During the jacking operations, no person should be directly behind either end of the tendon. Occasionally a tendon will let go, resulting in a very dangerous situation.

Each jack used to stress tendons shall be equipped with either a pressure gauge or a load cell along with certified calibration charts for determining the jacking force.

Gauging devices should be re-calibrated at intervals of not more than 180 days; howevr, if during the progress of the work, any gauging system appears to be giving erratic results, or if gauge readings and elongation measurements indicate materially different stresses, the jack and the gauges shall be re-calibrated.

A starting load, usually 20 percent of the jacking load, as shown in the approved post tensioning schedule, is applied to the tendon. The purpose of this starting load is to take up the slack in the tendon so that an accurate elongation measurement may be made. This load is applied by hydraulic jacks and measured by the jack gauges. During the stressing operation, the tendons shall be jacked to the specified load and the jacking load and elongation shall be recorded. Also the elongation after seating must be measured and recorded (see Figure 6-5).

Inthe event of discrepancies between measured elongations and calculated elongations (see Stress Acceptance Criteria), the entire operation should be carefully checked and the source of error determined and corrected before proceeding further. A discrepancy between the elongation and the jacking force usually indicates that the gauge on the jack is not correctly calibrated, there is undue friction between the duct and the tendon, or the tendons ar not properly anchored.

Stress Acceptance Criteria

Strand Tendon (lengths 50 feet (15 meters) and less):

1. The tendon may be accepted provided: The measured elongation is equal to or exceeds 93 percent of the approved calculated elongation, and

2. A force verification lift-off is performed: The verification lift-off force is between -5 percent and +5 percent of the approved calculated force.

Strand Tendon (lengths greater than 50 feet (15 meters) and less than 150 feet (45 meters)):

1. If the measured elongation is between -7 percent and +7 percent of the approved calculated elongation, the tendon can be accepted.

2. If the measured elongation exceeds 107 percent of the approved calculated elongation, confirm the jack/gauge calibration, and then perform a force verification lift-off:

   a. If a force verification lift-off is performed on one end of the tendon only and the lift-off force is between -1 percent and +5 percent of the approved calculated force, the tendon can be accepted.

   b. If a force verification lift-off is performed on both ends of the tendon (jacking end and anchor end) and the lift-off forces are between -5 percent and +5 percent of the approved calculated force, the tendon can be accepted.

Strand Tendon (lengths 150 feet (45 meters) and greater):

1. If the measured elongation is between -7 percent and +7 percent of the approved calculated elongation, the tendon can be accepted.

2. If the measured elongation exceeds 107 percent of the approved calculated elongation, confirm the jack/gauge calibration, and then perform a force verification lift-off.

   a. If a force verification lift-off is performed on one end of the tendon only and the lift-off force is not less than 99 percent of the approved calculated force nor more than 0.7 f's As, the tendon can be accepted.

   b. If a force verification lift-off is performed on both ends of the tendon (jacking end and anchor end) and the lift-off forces are not less than 95 percent of the approved calculated force nor more than 0.7 f's As, the tendon can be accepted.

Singularly Jacked Four-Strand Transverse Deck Tendon:

The tendon may be accepted provided:

1. The measured elongation of an individual strand is between -10 percent and +10 percent of the approved calculated elongations, and

2. The average of all four individual strand percent elongations is between -7 percent and +7 percent of the calculated elongation.

Bar Tendon:

1. The tendon may be accepted provided: The measured elongation is equal to or exceeds 93 percent of the approved calculated elongation, and

2. Perform a force verification lift-off: The verification lift-off force is between -5 percent and +5 percent of the approved calculated force.

If acceptance tolerances are exceeded, notify the Olympia Service Center Construction Office.

f's = specified minimum ultimate tensile strength of prestressing steel (270 ksi (1862 Mpa) for strands and 150 ksi (1034 Mpa) for bars.)

As = cross-section area of the tendon (0.153 square inches (99 square millimeters) for 1/2-inch (13-mm) diameter strand, 0.217 square inches (140 square millimeters) for 0.6-inch (15-mm) diameter strand.)

The grout used is fluid and quite different from the mortar we usually associate with the term grout. The component materials of the approved grout mix must be accurately measured. **The maximum amount of water specified must not be exceeded.** The grout should be screened after it has been mixed and before it is added to the grout equipment to remove lumps which might cause clogging of the ducts.

Immediately, prior to grouting, the ducts shall be blown out with oil free compressed air. Grout is applied continuously by pumping under moderate pressure at the lower end of the duct toward an open vent at the upper end until all entrapped air is forced out the open vents. The open vents are closed under pressure of issuing grout after a steady solid stream of grout is discharging. The grouting pressure is gradually increased to a minimum of 100 psi (690 kPa) and 200 psi (1380 kPa) maximum and held at this pressure for a minimum of 10 seconds. The grouting entrance is then closed.

After grouting of the tendons, the recesses for the anchorages are cast solid with concrete.

A complete record must be kept of the stressing operations.

An example of the Post-Tensioning Record (Form 450-005) is shown in Figure 6-5 the following explanation to help in completing the record.

A. Required jacking force for the tendon is obtained from the approved post-tensioning details.

B. Gauge pressure is obtained from the certified calibration chart for the jack to obtain the required jacking force listed in "A" above.

C. Gauge pressure for the initial force to take up the slack in the tendon and is usually 20 percent of the force obtained in "B" above.

D. The designed elongation is obtained from the approved post-tensioning details, however the stress strain curves prepared by the steel manufacturer shall be used to determine the modulus of elasticity for adjusting the designed elongation based on the average value of all strands to be incorporated in the tendon.

E. This required seating take up is obtained from the approved post-tensioning details. This is usually 1/4 inch (6 millimeters) to 3/8 inch (10 millimeters).

F. & G. The elongation must be measured at the initial force of 20 percent of the required jacking force, at the specified jacking force, and again at the 20 percent loading.

H. The difference in the elongation measured at full force and the elongation measured at the initial force of 20 percent (minus any dead end slip). This elongation should be reasonably close (see Stress Acceptance Criteria) to the required elongation in "D" above.

I. Seating take-up is the difference in the elongation measured at full force and the elongation measured after the tendon has been seated and the jacking force reduced to the initial force of 20 percent of full force. However, since the elongations are measured at the end of the jack, the elongation of the tendon from the wedges to the measuring point must be accounted for to obtain the true seating take-up. After finding the difference between the full jacking force elongation and the 20 percent of full jacking force, (I1) the elongation of the tendon inside the jack must be subtracted from the difference to obtain the true seating take-up. (I2) The elongation of the tendon inside the jack is approximately 1/16 inch per foot (5 millimeters per meter). This seating take-up should be the same as the required take-up in "E" above. It is important that the specified seating take-up be obtained as it has an appreciable effect on the stress in the tendon.

J. Percent elongation per tendon is a comparison of the calculated elongation and the measured elongation. If the elongation obtained at full jacking force is not reasonably close to the required elongation, the following conditions are usually indicated:

1. There is more (or less) friction in the tendon than was anticipated in the calculations of the post-tension details.

2. The gauging devices on the jack are not properly calibrated.

3. The strands of a tendon are not properly anchored.

If tendon stressing is performed at an air temperature below 60 F (16°C), the Contractor should not be allowed to use jack pressure gauges that utilize oil or glycerin. This will ensure accurate jack pressure readings. The reason for this is that these gauges tend to react slowly at lower temperatures. What can happen with these gauges is the jack operator will bring jack up to the required gauge pressure and shut the jack off. Since the gauge is slow in reacting, it will continue to rise until it "catches" up, resulting in over stressing the tendon. Once this occurs, the tendon will usually need to be replaced.

Figure 6-5
Metric

Washington State Department of Transportation

CONTRACT NO.	PAGE NO.
SECTION	
STRUCTURE	
PROJECT ENGINEER	INSPECTOR

Post-Tensioning Record

Date	Gir. No.	Tendon No.	Jack No.	Jack Location	Req'd. Jacking Force Per Tendon (kN)	Strands Per Tendon	Gauge @ 20% Jacking Force (MPa)	Gauge @ Req'd. Jacking Force (MPa)	Gauge @ Actual Jacking Force (MPa)	Actual Elong. (mm)	(A) 100% Actual Elong. -20% Actual Elong. (mm)	(B) Calc. 80% Elong. (mm)	% Elong. Per Tendon	100% Actual Elong. -Seated Elong. (mm) = (c)	(c) -Jack Elong. = Seating Take-up (mm)	Req'd. Seating Take-up (mm)
1-2-96	A	1	6	Pier 1	1655	12	9.65	48.26	9.65	108						
									48.26	597	489	486				
									9.65	582				15	10	10
							Dead	End	Slip		(-) 3					
											486				15-5	
															1 m jack x 5 mm/m	
1-2-96	A	1	6	Pier 3	1655	12	9.65	48.26	9.65	0						
									48.26	44	44	50				
									9.65	30				14	9	10
											530	536	99			
					A		C	B	F	G	H	D	J	I_1	I_2	E

DOT Form 450-005X Met
Revised 1/97

Distribution: Final Records
Olympia Service Center Construction

Note: % Elong. = The sum of columns "A" for both ends of the tendon divided by the sum of columns "B" for both ends of the tendon X 100.
% Elong. shall be between 93% minimum and 107% maximum.

Washington State Department of Transportation

CONTRACT NO.	PAGE NO.
SECTION	
STRUCTURE	
PROJECT ENGINEER	INSPECTOR

Post-Tensioning Record

Date	Gir. No.	Tendon No.	Jack No.	Jack Location	Req'd. Jacking Force Per Tendon (Kips)	Strands Per Tendon	Gauge @ 20% Jacking Force (p.s.i.)	Gauge @ Req'd. Jacking Force (p.s.i.)	Gauge @ Actual Jacking Force (p.s.i.)	Actual Elong. (in.)	(A) 100% Actual Elong. -20% Actual Elong. (in.)	(B) Calc. 80% Elong. (in.)	% Elong. Per Tendon	100% Actual Elong. - Seated Elong. (in.) = (c)	(c) - Jack Elong. = Seating Take-up (in.)	Req'd. Seating Take-up (in.)
1-2-96	A	1	6	Pier 1	372	12	1400	7000	1400	4 1/4						
									7000	23 1/2	19 1/4	19 1/8				
									1400	22 7/8				5/8	7/16	3/8
							Dead	End	Slip		(G) 1/8					
											19 1/8			5/8 - 3/16		
														3 foot Jack x 1/16 in/ft.		
1-2-96	A	1	6	Pier 3	372	12	1400	7000	1400	0						
									7000	1 3/4	1 3/4	2				
									1400	1 1/4				1/2	5/16	3/8
											20 7/8	21 1/8	99			
					(A)		(C)	(B)	(F)	(G)	(H)	(D)	(J)	(I_1)	(I_2)	(E)

DOT Form 450-005X
Revised 1/97

Distribution: Final Records
Olympia Service Center Construction

Note: % Elong. = The sum of columns "A" for both ends of the tendon divided by the sum of columns "B" for both ends of the tendon X 100.
% Elong. shall be between 93% minimum and 107% maximum.

Figure 6-5
English

6-2.9 Measurement and Payment

Measurement and payment instructions are covered in Sections 6-02.4 and 6-02.5 of the *Standard Specifications*.

6-3 Steel Structures

6-3.1 General

The Contractor shall submit shop plans of all steel fabrication for approval. Fabrication of the steel shall not be started until the shop plans have been approved by the Bridge and Structures Engineer (or Terminal Design Engineer for the Ferries Division projects) and the materials source and fabricator have been given approval by the Olympia Service Center Materials Engineer. The Olympia Service Cente Materials Engineer shall advise the Bridge and Structures Engineer (or Terminal Design Engineer) when the materials source or fabricator has been approved. The plans will not be returned to either the Contractor or the fabricator by the Project Engineer until the approval of source has been given by the Olympia Service Center Materials Engineer. WSDOT approves the shop plans for sufficiency of the materials and connections and not for the correctness of dimensions. Some details of the design drawings may, with the approval of the Bridge and Structures Engineer (or Terminal Design Engineer), be changed to suit the erection methods the Contractor desires to use. These revisions may require a change order.

The Contractor shall submit eight sets of all shop detail plans required for fabrication of the steel directly to the Bridge and Structures Engineer and two sets to the Project Engineer. For the Ferries Division projects, all ten sets shall be submitted to the Terminal Design Engineer. If a railroad is involved, four additional sets are required for each railroad involved. See the shop plans and working drawings table in chapter 1-2.4I. The Project Engineer should advise the Bridge and Structures Engineer of any conditions that would affect the checking and approval of the drawings. These comments should be shown with a green color marker on the Project Engineer's copy.

Shop inspection is performed either by inspectors or representatives of the Olympia Service Center Materials Laboratory. Material Acceptance Reports are obtained by these inspectors and provided to the Project Engineer upon completion of the shop fabrication. Erection plan sheets generally accompany the shop plans.

Falsework and erection plans for structural steel structures shall be submitted for approval in the same manner as for concrete structures.

Camber diagrams are normally shown in the contract plans. It is the Fabricator's responsibility to fabricate the members to the prescribed camber shown in the plans.

The Fabrication Inspector should verify that the members are fabricated in accordance with the approved shop drawings.

The use of heavy equipment for erection purposes requires the approval of the Bridge and Structures Engineer. See *Standard Specifications* Section 6-01.6.

Prior to completion of the project, the Contractor is required to furnish shop drawings on mylar or equivalent, which will be sent to the Bridge and Structures Office for their permanent file. These drawings must be suitable for reproducing by microfilming.

6-3.2 Layout

Laying out work for structural steel spans requires greater accuracy than for other structures. Use precise instruments, standardized tapes, scales and thermometer when making layout. Spacing of piers, bents, and anchor bolts shall be as shown in the plans, providing the span after fabrication in the shop is the correct length.

The fabrication shop is required to furnish a sketch showing the length of span and amounts of camber measured in the shop at the time the spans are assembled. The Project Engineer should have a copy of this sketch before erection is begun. The lengths as measured in the shop seldom vary more than 1/4 inch (6 mm) to 3/8 inch (10 mm) from the design drawings, and there is sufficient play in the anchor bolt sleeves for this tolerance.

Allowance will be made on the design drawings for stretch of the span due to loss of camber. The Project Engineer shall compute camber elevations from the shop camber measurements taken by the shop. Elevations shall be set above the falsework at each panel point for the camber blocking. Most erectors set the camber blocks high to allow for settlement of the falsework. The amount of allowance for settlement should be decided by the erector. The Project Engineer shall give the exact elevations for the finished camber. Elevations shall be given and carefully checked as an error means that an unnecessary amount of jacking and adjusting may be required.

The adjustment of spans is often a source of argument between erectors and engineers. Accurate work on the part of the Engineer will do much to avoid such arguments. Elevations set on the falsework before the load is applied may not be correct after the load is applied. It is the responsibility of the Contractor to determine the allowance that may be necessary to compensate for settlement in the falsework. It is easier to lower the span than to raise it.

6-3.3 Handling and Storing Material

Structural steel members shall be handled carefully to prevent twisting, bending, or scraping the member. The material shall be supported on suitable skids or platforms to keep it off the ground or out of water and it shall be protected from deterioration by rust.

Structural steel members should not be unloaded and stored on adjoining concrete approach spans. If the Contractor proposes to use the concrete approach spans to support the structural steel members, the proposal must be submitted in writing to the Bridge and Structures Office for review and approval. This proposal shall include drawings describing the support locations, loads, and supporting stress calculations. The structural steel members shall be placed on timber blocking, spaced so that the weight (mass) will be carried on the girders (load carrying members) and not on the comparatively thin concrete deck slab. Bridge decks are designed for carrying traffic and not as storage or dock space. This is especially true for concrete sidewalk slabs. Sidewalk concrete slabs shall not be overloaded by loads such as building material, tool sheds, or paint sheds.

6-3.4 Straightening Bent Material

Methods for straightening of plates, angles, other shapes, and built-up members shall not produce fracture or other injury to the metal, and shall be approved by the Olympia Service Center Construction Office. Distorted members shall be straightened by mechanical means or by the carefully planned and supervised application of a limited amount of localized heat. The temperature of the heated area shall not exceed 1,100 F (593°C) (a dull red) and shall be controlled by temperature indicating crayons, liquids or bimetal thermometers.

Following the straightening of a bend or buckle, the surface of the metal shall be tested for evidence of fracture.

6-3.5 Setting Anchor Bolts and Masonry Plates

Anchor bolts are usually plain round bolts with the head and plate washer on the lower end and the thread and nut at the top end. These bolts are set in pipe sleeves to allow room for adjustment of the span. Location of anchor bolt sleeves is very critical and must be verified by the inspector. Also, the exposed length of anchor bolts should be checked to ensure enough thread is exposed out of the pier cap to tie down the lower bearing assembly.

Anchor bolt sleeves, when anchor bolts will not be grouted until after freezing weather, must be protected against damage from expanded ice by filling the sleeves with an approved nonevaporating antifreeze solution. Without exception, when piers and superstructures are constructed under separate contracts, the anchor bolt sleeves shall be filled with an approved nonevaporating antifreeze solution by the substructure Contractor. Before the bolts are grouted, the antifreeze solution shall be removed, the space well cleaned and the holes then filled with grout. The antifreeze solution shall be diluted with water and completely removed from the sleeves or it will have a detrimental effect on the filler grout. See Section 6-02.3(18) of the *Standard Specifications*.

It is important to set bearings level on all piers. Bridge plan bearing details usually show a leveling method. Bearings shall be set so that they are at zero movement at 64 F (18°C) after the total load is applied and the span is released. The amount of offset varies with the length of the span and the temperature at time of erection.

Anchor bolt holes and the void underneath masonry plates shall be grouted, after all structural steel is erected and adjusted for length and camber, and at least seven days before the deck concrete is placed. Portland cement shall be used for grouting and the procedure should be as outlined in Section 6-03.3(36) of the *Standard Specifications*.

Do not grout underneath masonry plates with dry mortar unless specifically shown in the plans. The Contractor shall build forms around the masonry plate about 4 inches (100 millimeters) high and pour grout in the form from one side until the whole area is well filled. Use a wire or steel band to keep the grout flowing. After the grout has taken its initial set, remove the form and cut the edges of the grout with a trowel to about a 45 degree bevel from the bottom of the shoe to top of the pier. Do not allow the finished grout to extend above the bottom of the masonry plate.

6-3.6 Erection of Steel

6-3.6A Assembling

Before erection of the steel is commenced, the structural steel members shall be inspected for damage during shipping and handling. Any members that have been damaged must be repaired or replaced before being erected.

All members should have been match-marked and shall be assembled in accordance with the erection drawings from the Contractor. As the erection progresses, the Inspector should compare assembled members against the erection plans to see that proper members are in correct positions.

If during assembling, it is discovered that various members do not fit together, do not allow undue force to be applied to make them fit. The application of such a force can introduce stresses in several components of the structure. These stresses can be of a magnitude high enough to cause serious structural problems. The structure has not been designed to take these stresses. In such cases, the Olympia Service Center Construction Engineer, Bridges, shall be informed.

Structural steel members that are improperly fabricated, or do not fit, shall be rejected and either repaired or replaced with new. If the Contractor elects to repair the structural member, the proposed repair procedure shall be reviewed and approved by the Olympia Service Center Construction Engineer, Bridges, prior to any repair work.

Unless otherwise shown or specified, structural steel connections shall be bolted. Simple truss spans shall be completely erected with all field-bolted connections and/or splices held in place with the minimum number of drift pins and bolts as specified in Section 6-03.3(32) of the *Standard Specifications*. Once the minimum number of drift pins and bolts are installed in all the connections, final adjustments for span length and camber shall be made prior to completion of bolting and release of falsework. The assembly and bolting sequence for all structural steel structures shall strictly follow the approved erection plan. Erection and bolting sequences, especially cantilever and arch spans, are usually detailed in the contract documents.

Field connections shall be pinned and bolted in accordance with the requirements of Section 6-03.3(32) of the *Standard Specifications*. This section applies to connections and splices made in the field. Connections are when one structural steel member is bolted directly to another structural steel member; such as, cross-members and braces. Splices utilize structural steel plates to connect two structural steel members; such as, a plate girder. It also requires all connections and splices be securely drift-pinned and bolted before the weight of the member can be released or the next member is added. The field erection drawings must specify pinning and bolting requirements. Section 6-03.3(32) then specifies the required minimum number of pins and bolts for field connections and splices.

All bolted connections are designed by WSDOT to be friction connections. A friction connection transfers the stress by friction between surfaces in contact and does not depend on shear or bearing between members and bolts. The friction is provided when the connection or splice members are compressed through tension on the bolts (measured by turn-of-nut or direct-tension-indicator method). To develop design contact surface friction, all bolts in a bolted connection must be properly tightened to the minimum specified tension. The *Standard Specifications* recognize that final design loads are not present during erection of the structural steel members. Therefore, during erection, all the bolts are not needed in order to develop the friction necessary in the connection or splice for erection loads. The *Standard Specifications* recognize this and require a minimum percentage of the holes to be filled during erection; for instance, 50 percent for normal structures and 75 percent for cantilevered structures. These holes are filled with a combination of drift pins and bolts. Drift pins are required to properly align the members since bolts are usually smaller in diameter than the holes. Bolts are required to develop the minimum friction required to transfer erection loading. The minimum friction or load-carrying capacity is not developed until the bolts are tightened to the specified minimum tension.

Once the member is released from its support (support falsework or crane), the *Standard Specifications* specify the procedure required to complete bolting of each connection.

Sometimes fabricators will temporarily bolt-splice plates to the appropriate member. The fabricator will usually use the minimal number of bolts to secure the splice plate during shipping and handling. These temporary bolts shall be removed and replaced with approved high-strength bolts.

6-3.6B High-Strength Bolts

Structural steel field connections are made with high tensile strength bolts conforming to the requirements of Section 9-06.5(3) of the *Standard Specifications* and Special Provisions. A special heat treatment gives these bolts a high tensile strength.

WSDOT designed bolted connections generally operate by a transfer of stresses by friction between surfaces in contact and do not depend on shear or bearing between the members and the bolts. Therefore, it is imperative that the contact surfaces of the metal shall be properly cleaned and the required minimum tension be obtained in the bolts.

The required tension in the bolts may be obtained by using either the Turn-of-Nut method or the Direct Tension Indicator (DTI) Method unless the specifications for the project state otherwise. If required because of bolt-entering and wrench-operation, tightening by either procedure may be done by turning the bolt while the nut is prevented from rotating. Section 6-03.3(33) requires a hardened washer under the turned element. Therefore, if the bolt is turned, a hardened washer is required under the bolt head. A hardened washer is also required with the DTI Method.

Bolted parts shall fit solidly together when assembled. Where an outer face of the bolted parts has a slope greater than 1:20, with respect to a plane normal to the bolt axis, a beveled washer shall be used to compensate for the lack of parallelism. See Figure 6-6. Bolts shall be tightened beginning from the center of each connection towards the edges of the connection. All joint surfaces, including those adjacent to the bolt heads, nuts or washers, shall be free of scale, except tight mill scale, and shall also be free of burrs, dirt, and other foreign material that would prevent solid seating of the parts.

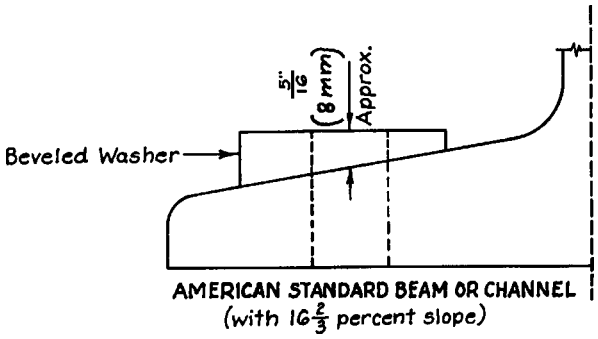

Figure 6-6

AASHTO specifications require that bolts bear specific identification marks. The following identification is marked on the top of the bolt heads:

	AASHTO M 164	AASHTO M 253
Type 1	A 325 8S	A 490 10S
Type 2	A 325 8S	A 490 10S
Type 3*	A 325 8S3	A 490 10S3

*At the manufacturer's option, Type 3 bolts may have additional distinguishing marks to indicate the bolt is atmospheric corrosion resistant and of weathering type.

Nuts of all classes, in nominal diameter M5 and larger, shall be marked with the property class designation (5, 9, 10, 12, 8S, 10S, 8S3, 10S3) on the top or bearing surface, on the top of flange, or on one of the wrenching flats. Additionally, nuts of Classes 10, 12, 8S, 8S3, 10S, and 10S3 shall be marked with a symbol to identify the manufacturer. For Classes 8S3 and 10S3 nuts, the manufacturer may add other distinguishing marks to indicate the nut is atmospheric corrosion resistant and of a weathering grade of steel.

Type 3 bolts must be used when the structure is not being painted (WSDOT rarely utilizes unpainted structural steel for new structures). Nuts and washers used with Type 3 bolts must also have weathering characteristics.

Each fastener shall be tightened to provide, when all fasteners in the joint are tight, at least the minimum tension shown in the *Standard Specifications* for the size and grade of fastener used.

Turn-of-Nut Method

When the turn-of-nut method is used to provide the specified bolt tension, all of the required minimum number of bolts within a bolted connection or splice shall be brought to a "snug tight" condition. The bolts shall be tightened to "snug tight" in a systematical order to ensure that all parts of the joint are brought into full contact with each other. This usually requires that the bolts located near the center of the connection or splice be tightened first. Then all remaining bolts shall be tightened from the center progressing toward the outer edges. "Snug tight" is defined as the tightness attained by (1) a few blows from an impact wrench, or (2) the full effort of a man using an ordinary spud wrench. The "snug tight" requirement also establishes the starting point for full tensioning by the turn-of-nut method.

Once the bolts are snug tight, the outer face of the nut and protruding part of each bolt shall be match-marked with crayon or paint. The match-marking provides the control to both ensure the bolt does not rotate during tightening and measure the nut rotation. The required minimum nut rotation is listed in Table 4 of Section 6-03.3(33) of the *Standard Specification*s. During this tightening operation, there shall be no rotation of the part not turned by the wrench.

Contractors often suggest a tightening method that eliminates marking the bolt as required in the turn-of-nut method. This suggested method requires calibration of the air impact wrench(es) and the inspection torque wrench. After calibration, the Contractor wants to snug tighten each bolt, then tighten to minimum tension using the air impact wrench without marking the nut and bolt. This method is heavily dependent upon the torque wrench test and is not accepted by WSDOT.

Direct Tension Indicator Method (DTI)

When the direct tension indicator method is used to provide the specified bolt tension, all of the required minimum number of bolts within a bolted connection or splice shall be brought to a "snug tight" condition. The bolts shall be tightened to "snug tight" in a systematic order to ensure that all parts of the joint are brought into full contact with each other. This usually requires that the bolts located near the center of the connection or splice be tightened first. Then all remaining bolts shall be tightened from the center progressing toward the outer edges. "Snug tight" is defined as the tightness attained by (1) a few blows from an impact wrench, or (2) the full effort of a man using an ordinary spud wrench.

This method uses a direct-tension-indicator washer that has formed protrusions on one face, leaving a gap. As the bolt is tensioned, the formed gap is reduced. The measurement of this gap verifies the bolt tension. Section 6-03.3(33) of the *Standard Specifications* addresses the maximum gap opening for direct tension indicators.

WSDOT has two concerns associated with the use of direct-tension-indicator washers. These concerns are (1) potential corrosion within the washer gap and (2) undetected bolt loosening as bolt tightening of a connection or splice proceeds. Following is a brief discussion of each item:

(1) Potential Corrosion: The *Specifications* address this potential corrosion problem by limiting the maximum gap opening for painted and unpainted structures. These gap opening limits are governed by both tension requirement and required corrosion protection. The direct tension indicator manufacturers address only the minimum bolt tension requirement. It is, therefore, very important that the Inspector be aware of this additional concern of potential corrosion.

(2) Undetected Bolt Loosening: The manufacturers of the direct-tension-indicator washers emphasize the ease and reliability of their product. They claim, and it is true, that if the gap is reduced to the specified maximum opening, the respective bolt is properly tensioned. The concern we have is that through the process of tightening all the bolts in a connection or splice, a warped plate may be progressively flattened, potentially loosening the initially tightened bolts. If this happens, the indicator washer still indicates the bolt(s) are fully tensioned. For this reason, WSDOT requires that bolt tension inspection, usually with a calibrated torque wrench, be performed. The Inspector should be aware of this potential problem and observe the tightening procedure with this in mind.

Inspection

The Inspector shall determine that the requirements of the *Standard Specifications* are met in the work. The Inspector shall observe the installation and tightening of bolts to determine that the selected tightening procedure is properly used and shall determine that all bolts are tightened and, in the case of the direct-tension-indicator method, that the correct indication of tension (gap) has been achieved. Bolts may reach tensions substantially higher than the value in Table 3 of the *Standard Specifications*, Section 6-03.3(33), but this is not cause for rejection.

The condition of the bolts is critical to the bolt-up operation and inspection. Bolts to be installed in the structure shall be lubricated in accordance with the *Standard Specifications*. A good check is a nut that is easily turned on the entire threaded portion of the bolt.

The following inspection procedure shall be observed for:

1. Bolts tightened using the turn-of-nut method: The Contractor, in the presence of the Engineer, shall use an inspection wrench which may be a torque wrench. Calibration of the inspection torque wrench is explained in a following section.

Bolts that have been tightened using the turn-of-nut method shall be inspected by applying, in the tightening direction, the inspecting wrench and its job-inspecting torque to 10 percent of the bolts, but not less than two bolts, selected at random in each connection. If no nut or bolt head is turned by this application of the job inspection torque, the connection shall be accepted as properly tightened. If any nut or bolt head is turned by the application of the job inspecting torque, this torque shall be applied to all bolts in the connection, and all bolts whose nut or head is turned by the job inspecting torque shall be tightened and reinspected. As an alternate, the Contractor may retighten all of the bolts in the connection, and then resubmit the connection for the specified inspection.

2. Bolts tightened using the direct-tension-indicator method: The Contractor, in the presence of the Engineer, shall use a feeler gauge to verify that each bolt has been properly tensioned to the maximum specified gap.

If a bolt that has had its direct-tension-indicator washer brought to full load loosens during the course of bolting the connection, the bolt shall have a new direct-tension-indicator washer installed and be retensioned. Reuse of the bolt and nut are subject to the provisions in the *Standard Specifications*.

Calibration of Inspection Torque Wrench

Five bolts of the same grade, size, and condition as those under inspection shall be placed individually in a calibration device capable of indicating bolt tension at least once each working day. There shall be a washer under the part turned in tightening each bolt. Each bolt shall be tightened in the calibration device by any convenient means to the specified minimum tension. The inspecting wrench then shall be applied to the tightened bolt and the torque necessary to turn the nut or head 5 degrees (approximately 1 inch (25 millimeters) at a 12-inch (300 millimeter) radius) in the tightening direction shall be determined. The job-inspection torque shall be taken as the average of three values, thus determined after rejecting the high and low values.

If the bolts to be installed are not long enough to fit in the state-furnished tension calibrator, five bolts of the same grade, size, and condition as those under inspection shall be tested using Direct-Tension-Indicator (DTI) to measure bolt tension. This tension measurement test shall be done at least once each inspection day. The DTI shall be placed under the bolt head. A washer shall be placed under the nut, which shall be the element turned during the performance of this tension measurement test. Each bolt shall be tightened by any convenient means to the specified minimum tension as indicated by the DTI. The inspecting wrench shall then be applied to the tightened bolt and the torque necessary to turn the nut 5 degrees (approximately 1 inch (25 millimeters) at a 12-inch (300 millimeter) radius) in the tightening

direction shall be determined. The job-inspection torque shall be taken as the average of three values, thus determined after rejecting the high and low values.

Figure 6-7 shows the operator calibrating a hand-indicator torque wrench. The bolt is brought to the proper tension by either method described above. The dial on the wrench was set at "zero" and sufficient torque applied to rotate the nut 5 degrees in the tightening direction. At this point, the wrench dial shows the kips (kilonewtons) required to further rotate the nut or bolt head. The torque wrenches used by inspectors of both the Contractor and WSDOT should be tested and compared at the same time for purposes of uniformity.

6-3.6C Welding

Welding of structural steel shall be in accordance with the requirements in Section 6-03.3(25) of the *Standard Specifications*. Welding will not be accepted as a substitute for bolting and should be done only where indicated in the plans. Adding even small welds not shown in the plans can induce high stresses in the members. This could seriously impair the strength and structural capability of the structure involved. The structure has been designed assuming that no additional welding will be done. The approval of the Olympia Service Center Construction Engineer, Bridges, is required before doing any welding not shown in the plans.

Good workmanship and proper materials are essential. Welding operators should be qualified for the type of welding they are required to do. Welding procedures shall be approved by the Bridge Engineer before starting to weld on the structure.

Welding defects should be corrected as indicated in the *Standard Specifications*.

Low hydrogen type electrodes must be dry when used. The care and use of these electrodes as given in the *Standard Specifications* should be completely observed. No relaxation of these requirements can be tolerated.

6-3.7 Placing Concrete Roadway Slab

As required in Section 6-03.3(39) of the *Standard Specifications*, the masonry plates shall be grouted and steel work, except railing, completely bolted and released from the falsework before forming for the roadway slab begins. Expansion dams shall not be bolted down until after the span is released from the falsework.

The camber diagram shown in the plans, especially for welded steel plate girders, quantifies the calculated deflection of the steel girder weight and the deflection of the girders due to the concrete slab weight (mass). The camber diagram for the weight (mass) of the steel girders only is utilized by the girder fabricator.

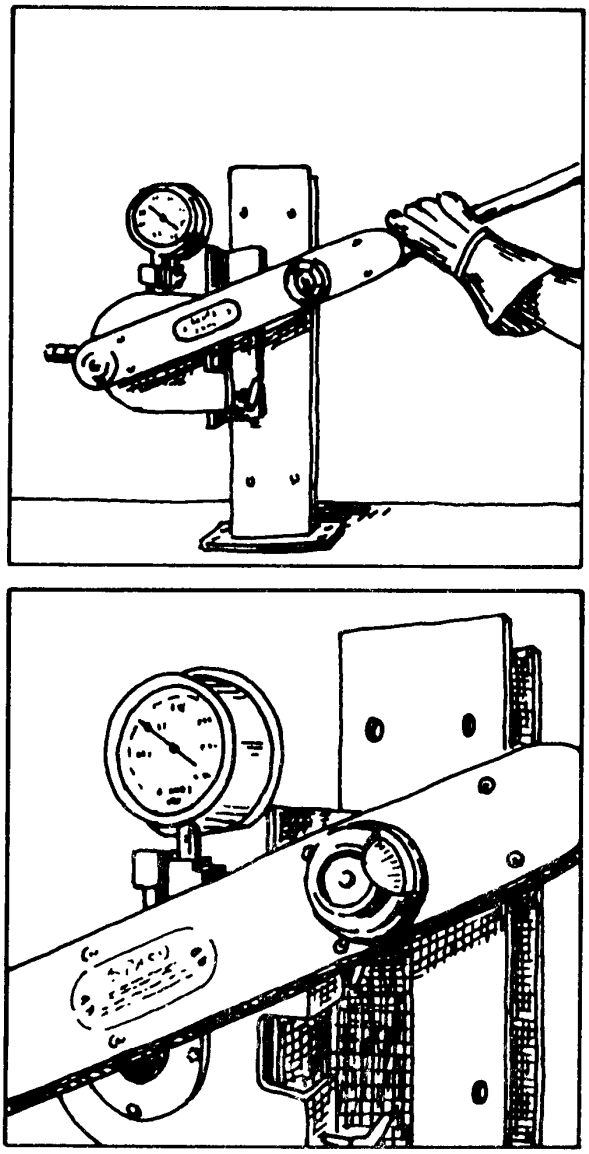

Figure 6-7

Once all the temporary girder supports are removed, it is important that elevation control points on the top of the flanges of the girders or floor beams be established and permanently marked before any external load, such as form lumber, reinforcing steel, etc., is applied. These control points should be located at proper intervals to establish elevations for formwork and finished roadway slab grades. These control points should be at the span tenth points or at cross-frame locations (panel points).

Once these control point elevations are established, fills at each of these control points shall be calculated utilizing the camber diagram for the weight (mass) of the roadway slab and the profile grade. These control point fill values shall be used from that point on because it is extremely difficult, if not impossible, to calculate the deflection of the girders as formwork and reinforcing steel are added. These control point fill values will be used for the final adjustment of the roadway slab finish machine.

A pouring sequence for the roadway slab may be shown in the plans to reduce the size of the concrete pours, control deflection, and minimize tension cracking of the concrete slab during construction. Placing and finishing the concrete in the roadway slab shall be the same as for Concrete Structures covered in Chapter 6-2 of this manual.

6-3.8 Railings

Steel railings may be erected in place at the same time the trusses are erected but they shall not be finally aligned or bolted until after the concrete deck is placed. Railings shall be true to line, and for single spans shall show the camber of the span. For two or more spans the railing shall show a uniform camber over all of the spans; that is, the individual camber of each span shall not be carried in the railing.

6-3.9 Painting

Steel structures shall be painted in accordance with the requirements in Section 6-07 of the *Standard Specifications*.

6-3.10 Measurement and Payment

Measurement and payment instructions are covered in Sections 6-03.4 and 6-03.5 of the *Standard Specifications*.

6-4 Timber Structures

6-4.1 General

Framing plans and details for treated timber structures shall be furnished by the Contractor and approved by the Project Engineer. Upon approval of the framing details, one set shall be returned to the Contractor and one set furnished the shop inspector. Inspection of shop framing and treating of timber is performed by shop inspectors of the Materials Lab. Inspection reports showing details of treatment and lists of materials shipped will be mailed to the Project Engineer. Representative pieces of each shipment will be stamped by the shop inspector.

Untreated timber may be accepted on the basis of an inspection certificate in accordance with Section 9-09.2(3) of the *Standard Specifications*.

6-4.2 Storage and Handling

Timber and lumber shall be stored off the ground and piled to shed water and prevent warping. Treated timber shall be handled carefully to prevent breaking of the outer fibers and rope or chain slings shall be used. Pike poles and peaveys are not to be used in handling treated timber.

6-4.3 Framing

All cutting, framing and boring of treated timbers shall be done before treatment insofar as is practicable. Framing shall be done in accordance with the requirements of Section 6-04.3 of the *Standard Specifications*.

6-4.4 Field Treatment of Timber

When field framing cannot be avoided, the cuts and holes shall be treated as required in the *Standard Specifications*. Timber for field treatment must be dry before applying the required treatment. Holes shall be bored for all bolts, drift bolts, boat spikes, dowels and truss rods using augers of the size specified in Section 6-04.3(5) of the *Standard Specifications*.

After removal of temporary scaffolding and formwork, the nail and bolt holes in treated timber shall be repaired in accordance with the *Standard Specifications*.

Field treatment for structures of untreated timber shall be in accordance with the requirements in Section 6-04.3(4) of the *Standard Specifications*.

6-4.5 Painting

Painting of timber structures shall be in accordance with the requirements in Section 6-07 of the *Standard Specifications*.

6-4.6 Measurement and Payment

Measurement and payment instructions are covered in Sections 6-04.4 and 6-04.5 of the *Standard Specifications*.

6-5 Piling

6-5.1 General

Piling shall conform to the requirements of Section 9-10 of the *Standard Specifications*. When piling is received on the project, it shall be inspected and a notation made in the section of Miscellaneous Notes in the Pile Record book. Untreated timber piles will be inspected in the field and accepted for use there. All other piling, except concrete piles cast on the job, will be inspected by Fabrication Inspectors before delivery.

6-5.2 Treated Timber Piling

Chain slings will be permitted in handling treated timber piles. Treated timber piling shall be furnished and driven full length, i.e., without splices. The entire length shall be

pressure treated. Therefore, the pile tip shall not be cut after treatment. If splices become necessary and the order length furnished by the Engineer is insufficient, the Olympia Service Center Construction Office should be contacted for direction. However a splice probably will not be considered if it cannot be located below the permanent water table elevation.

6-5.3 Precast Concrete Piling

Curing beds for steam cured concrete piles shall not rest directly on the floor but shall be elevated enough to permit the complete circulation of steam around the piles.

Lifting loops shall be removed to 1/2 inch (15 millimeters) below the surface of the concrete and the hole filled with mortar.

Concrete piles shall be handled as described in the *Standard Specifications*, the *Standard Plans*, or as shown in the plans in order to avoid excessive deflections and strains.

6-5.4 Cast-in-Place Concrete Piling

The casings for piles cast in place shall be carefully checked after driving, for water tightness and deformation of the casing due to the driving of adjacent piles. A mirror for reflecting light into the casing is the most common method for this check. On cloudy days, a flashlight may be lowered into the casing.

Immediately after driving, the pile casing shall be covered to prevent dirt and water falling into it. All debris and water shall be removed from the casing prior to placing the reinforcing steel cage. No water will be permitted in the casing when concrete is placed.

Due to the ever increasing loading from earthquake activity, most cast in place piling require reinforcement for the full depth of the pile. This full depth reinforcement presents extreme difficulty in placing concrete with a rigid conduit the full depth, especially if the pile is battered. For this reason, Class 4000P (28P) concrete is required. This class of concrete has small aggregate and fly ash making the mix rather sticky and cohesive, which reduces the likelihood of segregation during placement. This concrete shall be placed continuously through at 5-foot (1.5-meter) rigid conduit directing the concrete down the center of the pile casing, ensuring that every part of the pile is filled and the concrete is worked around the reinforcement. The top 5 feet (1.5 meters) of concrete shall be placed with the tip of the conduit below the top of fresh concrete. The Contractor shall vibrate, as a minimum, the top 10 feet (3 meters) of concrete. In all cases, the concrete shall be vibrated to a point at least 5 feet (1.5 meters) below the original ground line.

No Engineer's order list will be given for cast-in-place concrete piling.

6-5.5 Vacant

6-5.6 Steel Piling

Steel piling shall be handled in such manner as to prevent bending of the flanges, and when stacked they shall be supported in such a manner that the piles will not bend. When steel piles must be spliced and splicing details are not shown in the plans, the splice should be made with a single V-butt weld over the whole cross-sectional area of the pile. Welding shall be done with specified welding rod and suitable equipment in accordance with American Welding Society Specifications and good industry practice. A qualified welder is required. See Section 6-05.3(6) of the *Standard Specifications*.

No Engineer's order list will be given for steel piling.

6-5.7 Pile Driving

6-5.7A General

It is suggested that the Olympia Service Center Construction Office be contacted before any piling are driven.

Piling shall be driven to develop the bearing value as shown in the plans or in the *Standard Specifications*. The penetration of the piles under the last few blows must be carefully gauged and the bearing value computed by use of the formula shown in the *Standard Specifications*. Pile driving specifications should be administered with a great deal of common sense. There is no substitute for experience and good judgment.

Often the foundation reports contain two pile tip elevations, "estimated tip" and "minimum tip" elevations. The estimated tip elevation is simply the elevation that the tip is estimated to be driven to and is utilized to determine driving length quantities in the bid item for furnishing piling. Minimum tip elevations are often specified in the contract plans. These are usually to ensure that piles do not hang up on logs, a thin hard soil layer and other obstructions, or to achieve a minimum pile penetration (e.g., uplift and/or lateral load capacity). Minimum tip elevations are also specified where resistance to uplift is taken into consideration in the design of the foundation seal thickness. The minimum tip elevations should be higher than the estimated tip elevations. The Project Engineer should always review the tip elevations in the plans and compare them to the foundation report recommendations. Any discrepancies should be reported to the Olympia Service Center Construction Office.

The minimum tip elevations is a design parameter that may come from the geotechnical design or the structural design. A pile tip elevation that is less than minimum cannot be accepted in the field, it must be reviewed by the Bridge and Structures Office, the Bridge Construction Office, and the

Geotechnical Engineer. If, during the initial pile driving operations, minimum tip is not being achieved, no additional piling should be driven until concurrence is obtained to change the minimum tip elevation, or the contractor will have to change his method of installation so that the minimum tip elevation can be achieved.

In foundations without seals, where the minimum tip elevations cannot be attained, the Project Engineer may accept the pile if it is within 5 feet (1.5 meters) of the minimum tip elevation and the pile has been driven to 120 percent of the specified bearing. Where minimum tip elevations cannot be reached in foundations with seals, or where piles are more than 5 feet (1.5 meters) short of reaching the minimum tip elevation, the Olympia Service Center Construction Office shall be notified.

Foundation piles must be driven true to line and in their proper position so that full bearing and lateral support is secured for each pile. Each pile has been definitively positioned in the design, and piles should be driven as nearly as practicable to the position shown. Any variation of 6 inches (150 millimeters) or more from the plan shall be reported to the Olympia Service Center Construction Office before accepting the pile. The tolerance for all types of battered piles is 1/4 inch in 12 inches (20 millimeters in 1 meter). Any deviation exceeding this tolerance shall be reported to the Olympia Service Center Construction Office for evaluation.

Pile driving leads shall be fixed at the top and bottom as discussed in Section 6-05.3(9)C of the *Standard Specifications*, to ensure that the piling can be accurately driven both as to position and batter.

The type and size of hammers to be used to drive piling are specified in Section 6-05.3(9)B of the *Standard Specifications*. The Project Engineer shall require the Contractor to furnish full information on any hammer proposed for use so it can be determined whether or not the hammer meets the requirements of the specifications and that the bearing capacity of driven piles may be computed. It is very important to verify that the drop of the ram is in accordance with the submitted data. Otherwise, the pile bearing calculations will not be correct. A useful formula to determine the drop of a single acting diesel hammer determined from measuring the blows per minute is:

Stroke Formula (ft. of drop)=$(4.01((60/BPM)^2)-0.3)$

Stroke Formula (meter of drop)=$((4.01(60/BPM)^2)-.3)*.3048$

Where BPM is the blows per minute of the hammer.

This drop can then be used in the bearing equation in the *Standard Specifications* to determine the bearing of the piling.

This formula calculates the drop from the rate of blows per minute that the hammer is hitting at and makes it no longer necessary to watch the top of the hammer and estimate the distance that hammer is coming out of the casing. Since the rate the hammer runs at is dependent on the drop of the hammer, and this hammer drop is accelerated at a constant by gravity, the distance the ram travels can be determined from the formula.

The *Standard Specifications*, Section 6-05.3(9)B, and Special Provisions, govern the hammer size by specifying the minimum ram weight (mass) and the minimum energy required for each type of pile, required bearing, and hammer. The most commonly used hammers are air, hydraulic, or diesel activated. The hammer energy output is simply the weight (mass) of the ram times the distance the ram falls. This energy determination is a simple matter with a drop, hydraulic, or air/steam activated hammer. The measurement of the energy output of a diesel activated hammer is more complex. The minimum energy required by the specifications is the energy output of the hammer at the point of impact at the required pile bearing. The hammer needs to operate at or above the required minimum energy level in order to achieve the specified pile bearing capacity.

The Project Engineer may approve the Contractor's proposed hammer if it meets the criteria of the *Standard Specifications* and the special provisions. During field operations, the pile driving hammer must be capable of delivering at least the required minimum energy at the required pile bearing value. The Olympia Service Center Construction Office should be consulted for any unusual hammer submittals or insufficient performance in the field.

Drop hammers, which are rarely used, must be weighed before any piles are driven. The drop hammer stroke should be carefully measured. This can be done by taping a piece of rope or rag around the hammer line at the height above the hammer for the drop desired. The hammer operator can then gauge the drop with reasonable accuracy. The stroke (drop) of the hammer ram must be consistent with the required minimum energy.

Air or steam activated hammers lift the ram by either air or steam pressure to a predetermined distance and release the ram. The energy is produced by the falling ram. These hammers usually operate at 50 to 60 blows per minute depending on the hammer manufacturer. A count of the actual blows per minute will provide verification that the hammer is operating properly. If the blows per minute exceed the published manufacturer's data sheet for the specified minimum energy, and the Contractor is not able to find and rectify the problem, the Olympia Service Center Construction Office shall be notified. No additional piling are to be driven until the problem is resolved.

Hydraulic activated hammers lift the ram by hydraulic fluid pressure to a predetermined distance and then release the ram. The energy is produced by the falling ram. There are two types of hydraulic activated hammers, single and double acting. The hydraulic activating systems for both of these types of hammers are totally enclosed using a vegetable oil medium, rendering them environmentally friendly. The method for measuring the energy output is different for each type of hydraulic activated hammer. The energy output for each type can be varied by using simple adjustment procedures. Again, the respective hammer must be operating at or above the specific minimum energy when the required pile bearing capacity is reached.

Diesel activated hammers lift the ram by energy produced when diesel fuel is ignited. The energy produced is a combination of the fuel explosion and the drop of the ram. There are two types of diesel activated hammers, single and double acting. The method for measuring the energy output is different for each type of diesel activated hammer. Diesel hammers produce a variable energy. The variable energy output of a diesel hammer is dependent on a number of factors, which include fuel quality, fuel setting, soil conditions, and resistance from the pile being driven. As the pile resistance increases, the energy output of a diesel hammer usually increases. The manufacturer's maximum energy value for each diesel hammer is measured in the laboratory using a hammer in tip top shape. For this reason, it is a good idea to have a hammer on the project with a maximum rated energy higher than the contract minimum required energy. A good rule of thumb when selecting a diesel hammer is that, if 80 percent of the maximum energy of a hammer equals the contract minimum required energy, the diesel hammer will produce sufficient energy to meet the contract energy requirements.

A single acting diesel activated hammer is open at the top, and at the top of the ram stroke a portion of the ram is usually visible. The bearing value of the pile being driven is determined by the number of blows per foot (300 millimeters) at a blows per minute rate. The energy output of a single acting diesel hammer is determined by the blows per minute of the running hammer. The manufacturer is required to submit this energy data. The rate (blows per minute) is dependent on how high the ram raises up (stroke) due to the diesel fuel combustion. Thus, the longer the stroke, the greater the energy and the longer it takes. In other words, as the rate (blows per minute) decreases, the energy output increases.

A double acting diesel activated hammer is closed at the top. This closed top acts as a pressure chamber driving the ram back down where the diesel fuel explosion occurs. The bearing value of the pile being driven is determined by the number of blows per foot (300 millimeters) at a measured pressure within the top bounce chamber. The energy output of a double acting diesel hammer is determined by the measured bounce chamber pressure while the hammer is operating. The manufacturer is required to submit this energy data. Each double acting diesel hammer comes with a hose running from the bounce chamber to a box containing a pressure gauge. There is usually a button on this pressure gauge box. When the button is depressed the gauge is activated with the bounce chamber pressure. If this button is depressed continuously, the hammer efficiency decreases because of the pressure bleed off created by the pressure gauge operation. The button should only be depressed periodically when an energy reading is required. The pressure reading and corresponding energy shall meet the minimum energy at the required pile bearing value.

On some projects, pile driving vibrations will be monitored for potential damage to adjacent structures or buildings. When that monitoring indicates a potential for damage, the Project Engineer should ensure that the minimum size hammer specified for the piling being driven is actually being used. If so, and vibrations are still potentially damaging, the Olympia Service Center Construction Office should be notified to determine if preboring or jetting should be used to reduce vibrations. Should preboring or jetting, or other methods be determined necessary, such work shall be considered a change in accordance with Section 1-04.4 of the *Standard Specifications*.

The contract allows the use of vibratory hammers to initially set piles. As of yet, there is no reliable means of determining the actual bearing capacity of a pile driven by a vibratory hammer. Often, the contractor wants to initially set piles with vibratory hammers if the soils and/or limited access are such that impact hammer operation would be difficult. The contract allows this but requires that an impact hammer be used to acquire the bearing capacity. Since static friction is usually much higher than dynamic friction, the actual bearing capacity is determined while the pile is in motion. This requirement is governed by the contract requirement that the pile must be driven at least an additional 2 feet (0.6 meters) using an impact hammer with the blow count (blows per inch (25 millimeters)) constant or increasing. If the contractor uses a vibratory hammer to initially set the piles, there must be a comprehensive procedure to ensure proper location an plumbness of each pile. This is usually accomplished by providing a rigid steel template and using good conscientious control while setting and initially driving each pile.

The use of water jets may be required for driving piles, especially for concrete piles. The piles must be driven at least 6 inches (150 millimeters) after the jet is removed, or to the required bearing. Do not allow the nozzle of the jet to penetrate below the tip of piling previously driven. Mark the jet pipe in such manner that the operator and Inspector can determine the depth required. The Olympia Service Center Construction Office should be notified if water jets are proposed for use.

Preboring may also be used to secure the minimum specified penetration. Usually the prebored hole should be slightly smaller in diameter than the pile and the depth of preboring should be less than the minimum specified penetration. However, conditions may exist which make it necessary that a larger hole be prebored and the space around the pile be filled with sand while the pile is being driven to the specified bearing. Unless water-jetting, preboring, or other means of securing minimum penetration is specified and payment is provided for in the contract provisions, this work will be at the Contractor's choice and expense. However, the procedure used must be approved by the Engineer and shall result in a satisfactory pile and will not damage the integrity of the structure, roadway, adjacent structures, or utilities. Any damage done must be repaired to the satisfaction of the Engineer at the Contractor's expense.

The lengths of piling required are determined by driving test piles or by other information which may be available. The Project Engineer provides the Contractor with an order list for timber and precast concrete piles. This list must show the length of piles required below cutoff (the top of the pile within the footing). The Contractor should be informed that the lengths shown on the order list should be increased, at their expense, the necessary amount to provide for fresh heading and to reach from the cutoff elevation up to the position of the driving equipment. Payment for piling will be made for the number of feet shown on the order lists except that if greater lengths are driven, with the approval of the Project Engineer, payment will be made for the lengths actually driven below cutoff. Itemized lists for cast-in-place piles or steel piles will not be furnished by the Engineer.

Rejected piles shall be removed or cut off 2 feet (0.6 meter) below the bottom of the footing. Rejected casings for cast in place piles that are left in place shall be filled with sand.

The handling and driving of treated piling require special care. Heads of piles should always be freshly cut, and rings or wire mesh screens placed on top during driving. In wet weather the final cutoff should be at least 1 foot (0.3 meter) long and the creosote, pitch and fabric cover placed immediately after the pile is cut. Do not make a cutoff and then wait until the next day to place the cover. Fabric covers should be well tacked to the pile and neatly trimmed to within 3 inches (75 millimeters) of the top of the pile so that the fabric will not have ragged edges. A follower driving cap should be used on treated piles. This is to help hold the pile in line to minimize the use of chocks in the leads during driving. Timber piles must be strapped in accordance with the requirements of Section 9-10.1 of the *Standard Specifications* before they are driven.

Precast concrete piles require special care in storage and handling, especially when raising them into the leads. The general method of attaching slings for handling is described in the *Standard Specifications*. Long piles must be supported at the ends and at intermediate points to prevent undue bending and cracking of the concrete. In special cases the plans may show the method for lilting long piles. Some pile driving crews lack experience with concrete piles and handle them as they are accustomed to doing with timber piles. Such handling will probably result in damage to the concrete piles and must not be allowed.

In driving precast concrete piles, several layers of plywood or a 3½-inch (90 millimeter) wood block should be placed between the top of the pile and the steel driving head of the hammer. Care should be taken to prevent crushing of the pile head before the desired penetration is reached. Where crushing occurs, the top of the pile should be checked to determine if the end is square with the body of the pile; also, the hammer should be checked to determine if a fairly flat blow is being delivered to the pile. In driving concrete piles, it may be advisable, in order to prevent crushing of the head and to obtain the required penetration, to operate a hammer at less than full throttle until just before completing the driving, after which the throttle should be fully opened in order to obtain the true bearing value of the pile.

Large diameter prestressed concrete cylinder piles are not completely covered in the *Standard Specifications*. The requirements of the special provisions must be observed. Accuracy of placing and driving is most important. Every effort should be made to prevent these piles from drifting out of line or out of plumb during driving, but care must be taken to avoid applying excessive lateral force which may crack the pile. These piles do not have to be very far out of plumb before excessive overstress occurs. When a driven pile is found to be cracked or is out of plumb, it should be referred to the Olympia Service Center Construction Office for a decision regarding corrective action to be taken.

Care shall be taken in driving steel H piles to ensure that the driven pile is oriented as close as possible to that shown in the plans. Pile design usually involves horizontal forces due to temperature, concrete shrinkage, earthquake, and wind as well as axial forces, and if a driven pile is not aligned as shown in the plans, the pile may become overstressed due to excessive bending stresses. Any deviation of more than 20 degrees from the pile axis or more than 6 inches (150 millimeters) from the position shown in the plans shall be reported to the Olympia Service Center Construction Office for evaluation and acceptance.

6-5.7B Test Piles

A careful study should be made of the foundation exploration data shown in the plans and/or included in the Geotechnical Report before driving any test piles. Care should be taken that the test piles are not stopped on a relatively thin hard layer overlaying softer material. After the test piles have been driven, an effort should be made to

correlate the results with the foundation data before ordering the permanent piles. The results from diving the test piles should be discussed with the Regional Operations/ Construction Engineer if they do not correlate with the foundation data.

Test piles shall be driven to at least 15 percent more than the ultimate bearing capacity required for the permanent piles, except where pile driving criteria is determined by the wave equation. When pile driving criteria is specified to be determined by the wave equation, the test piles shall be driven to the same ultimate bearing capacity as the production piles. Test piles shall penetrate at least to any minimum tip elevation specified in the Contract. If no minimum tip elevation is specified, test piles shall extend at least 10 feet (3 meters) below the bottom of the concrete footing or groundline, and 16 feet (5 meters) below the bottom of the concrete seal.

Preboring, jetting, or other approved means may be used to secure minimum penetration with the test pile if such means is necessary and will be used for the permanent piles. The reason for driving the test pile is to obtain information for ordering the permanent piles, and to obtain additional information relative to driving the permanent piles.

It is the responsibility of the Contractor to supply test piles of sufficient lengths to provide for variation in soil conditions. If the piles furnished are not long enough, or are unsuitable in other ways, it will be necessary for the Contractor to supply acceptable piles. Followers will not be permitted in driving test piles. A follower is a member interposed between a pile hammer and a pile to transmit blows while pile head is below the reach of the hammer (pile head below the bottom of leads).

The Construction Office should be notified of the date test piles will be driven.

6-5.7C Pile Driving Records

Pile driving records are to be kept in the Pile Driving Record Book, Form 450-004, which becomes part of the project final records. This book has sufficient room for a condensed pile driving history, pile layout, and miscellaneous notes in addition to the driving log for each pile. Number the piles on the sketch in the pile layout and use these for the Pile No. on the pile driving log.

The pile driving record book contains instructions for completing the driving log. In order for this log to furnish complete information on the pile driving work, it is imperative that it be filled out completely in accordance with the instructions in the book. If more space is necessary, use more than one page for the pile. Items in the heading which are the same for several piling, may be marked “Same as Pile No. ___.”

The piling should be marked every foot (300 millimeters) of their lengths with crayon or paint unless there is some other method of determining when each foot (300 millimeters) of the pile has been driven. Count and record the number of blows per foot (300 millimeters) and hammer energy as the pile approaches bearing.

Test piles shall also be recorded in the pile driving record book. In addition, following the driving of each test pile, the Test Pile Record form shall be completed and sent to the appropriate offices the following day. This form should be filled in completely, including the rate/pressure of the hammer. Record the bearing value of the test pile for each foot (300 millimeters) as it is driven.

6-5.8 Measurement and Payment

Measurement and payment instructions are covered in Sections 6-05.4 and 6-05.5 of the *Standard Specifications*.

6-6 Bridge Railings

6-6.1 General

Railings shall be carefully aligned, both horizontally and vertically, to give a pleasing appearance. On multiple span bridges, the rail and wheel guard or curb heights at the ends of each span should be varied a sufficient amount to produce a uniform camber or grade from end to end of the bridge.

At the beginning and ends of horizontal curves and through vertical curves, the height of curbs may need to be varied so that the rail heights will be uniform above the curb. On any structure on which occurs a break in grade, horizontal curve with superelevation, vertical curve, or a combination of the three, the Project Engineer should plot to a large scale, the profiles of the roadway grades at the curb lines. From these profiles the grades for the tops of the curbs and railings can be properly determined. A slight hump in the rail over the whole structure is usually not objectionable, but a hump and then a sag is not permissible.

6-6.2 Measurement and Payment

Measurement and payment instructions are covered in Sections 6-06.4 and 6-06.5 of the *Standard Specifications*.

6-7 Painting

6-7.1 General

When inspecting bridge painting for steel structures, the Inspector should prepare a plan for the structure they will be inspecting. This plan will enable the Inspector to locate sections of the structure where painting activities occurred.

An Inspector’s Daily Report should be filled out after every work day with the activities performed and related to the Inspector’s bridge plan. In the daily report, the Inspector

should identify he activities such as cleaning, blasting, and applying the base, intermediate, and finish coats. These daily reports should accurately represent the work accomplished and any noted deficiencies.

The Inspector should become familiar with the latest safety requirements. Contract environmental requirements should be reviewed as well.

Manufacture and shop mixing of paint materials are controlled from the Olympia Service Center Materials Laboratory. Each container in each shipment of paint should bear a lot number, date of manufacture, type of paint and manufacturer's name.

When quantities of paint required for a particular job are 20 gallons (75 liters) or less, they may be manufactured and shipped without inspection and testing by the laboratory. A certificate of compliance with specifications signed by the manufacturer shall be presented to the Project Engineer by the Contractor at the time the paint is brought to the project site.

All paint shall be thoroughly mixed before using. Paint may be mixed by stirring with hand paddles or by using power stirrers.

All paints bearing dates of manufacture over one year old should be sampled on the basis of one sample per batch. Paint showing appreciable deviation from normal should be sampled and set aside until checked and released by the laboratory.

The paint should be capable of application at the required thickness without any sags or runs. If it is not possible to do this, the Materials Laboratory should be contacted for necessary steps to be taken.

6-7.2 Cleaning Metal

Cleaning for removal of rust or corrosion spots in repainting and cleaning of new steel shall mean "commercial" abrasive blasting as defined in the *Standard Specifications* or the Special Provisions.

Wire brushing and scraping shall normally be limited to removal of dirt and loose paint where corrosion is not involved.

All rust which cannot be removed by abrasive blasting shall be removed with chisels, hammers or other effective means as directed by the Engineer.

When called for in the *Standard Specifications* or Special Provisions, the entire structure shall be pressure flushed with water from the top down before other cleaning or painting is started. The nozzle should not be more than 9 inches (230 millimeters) from the surface being cleaned. A biodegradable detergent may be added to the water jet to remove oil and grease. Biodegradable detergents shall be approved by the Materials Laboratory and precautions taken to avoid harmful residue on the steel.

In addition to the initial pressure flushing, all abrasive blasting residue must be removed after blasting and spotting and before application of additional paint. Pressure flushing may be required for this purpose if the Project Engineer deems it necessary.

New steel, shop coated before erection, shall have all erection and transportation scars, rivet heads, and welds cleaned and spot coated. If a dirt film has accumulated on the steel during the erection period this must be removed by flushing. All concrete residue must be removed from the floor system after the deck pour is completed. Generally, this may be accomplished by flushing before the residue has set up and while the pour is in progress.

On repainting projects, the Engineer or Inspector should observe and report to the Bridge and Structures Engineer any spot or area where corrosion or other deficiencies are of such extent as to threaten the strength of the steel member. They should also observe areas where water becomes trapped to ultimately endanger the steel through corrosive action, and advise the Regional Operations/Construction Engineer, so the condition may be corrected.

Many bridges that are being repainted have been previously painted with lead based paint. When this is the case, the Contractor must submit a "Lead Health Protection Program". WAC 296-155-176. The waste generated from cleaning the bridge (bird guano, paint chips, etc.) must be tested as outlined in the contract provisions. Handling and disposal of this wasted must be as prescribed by current state law. Contact your regional environmental office regarding disposal of lead paint waste.

Containment systems are required by the Contract. Containment systems are required during the cleaning and painting of the bridge. These systems are necessary to prevent contaminants from entering state waters.

6-7.3 Applying Paint

All coatings shall be applied per the manufacturers recommendations.

Brushes and spray equipment should be in good condition. An intermediate stripe coat should be applied to the metal edges, inside angles, welds, bolt heads, nuts and rivets prior to the application of the full intermediate coat of paint. The use of inspection mirrors is required for reflecting light into the interior of boxed sections or members for locating painting defects.

The Inspector must check to see that the proper film thickness of paint is applied. Wet film thickness is to be measured immediately after the paint is applied and the dry

film thickness is to be measured after the paint has become thoroughly dry and hard. It is difficult to measure the dry film thickness of paint on galvanized metal so it is necessary to measure the wet film thickness for each coat of paint as it is applied.

When an Inspector finds an area where the painting does not meet the specifications, they should mark the area with contrasting brightly colored alkyd paint from an aerosol can. A light coat of this spray paint will not adversely affect the paint job and it will effectively mark the area to tell whether correction work was performed on the area. Marking the area with spray paint provides the Inspector with an easy method of marking deficient areas and provides the Contractor a ready method of locating the areas that require additional work. This will also free the Inspector to concentrate on areas of serious deficiencies without losing control over those requiring minor corrections. When marking the final coat, be careful to mark only the area to be reworked.

The protection of the structure, traffic, and property from splatters and airborne paint spray is the responsibility of the Contractor. Since WSDOT may be criticized because of damage from paint, the Engineer must enforce the provisions of the contract to ensure protection therefrom.

Adequate staging, scaffolding, ladders, and fall protection are required to be provided by the Contractor to ensure safety to workmen, room for good workmanship, and adequate facilities for proper inspection.

Technical assistance and equipment are available at the Olympia Service Center Materials Lab, and on request can be provided at the job site to ensure a good paint job.

During the preparation and painting of steel bridges, it is very important that the Inspector be aware of the potential impact to the surrounding environment. The air, water, and land quality are of major concern. WSDOT and environmental agencies are working together to establish guidelines for bridge painting. Policies and procedures involving environmental concerns will be addressed in the contract. Compliance to these specifications should be closely monitored.

6-8 Waterproofing

The instructions for this work are quite complete in Section 6-08 of the *Standard Specifications*.

Appendix A

The *Standard Specifications* previously had concrete mix designs that WSDOT would provide. The Contractor had the choice of using WSDOT's provided recipe or using a different mix. If the Contractor chose to provide a WSDOT mix, then WSDOT would be responsible for the performance of the mix provided it was produced within our specifications.

The proportions for mixes that used to be given in the *Standard Specifications* where in the nature of basic mixes which would need adjustment for the factors listed below as applicable to the job conditions. The following information is provided to give an understanding on how mix designs can be adjusted without substantially changing the mix characteristics.

Adjustments for cement content and workability cannot be applied until after batches have been mixed. The adjustment factors listed below are in the order in which they where to be applied.

Adjusting Mix Proportions

Adjustments to the proportions for WSDOT Provided Mixes that used to be shown in the *Standard Specifications* were to be made in the following order:

1. Bulk specific gravity
2. Crushed rock used as coarse aggregate
3. Substandard gradings
4. Free water in aggregates
5. Cement content**
6. Workability**

**The adjustments for either cement content or workability can only be made after testing has been completed from concrete batched with adjustments made for items 1 through 4.

Example:

Assume the following conditions for Class Class 3000 (20) Concrete without Air:

Coarse aggregate is crushed rock.

Bulk specific gravity, coarse aggregate is 2.76.

Bulk specific gravity, sand is 2.62.

Grading of coarse aggregate OK.

Grading of fine aggregate — finer than fine limits of specification by 25 percentage points. (Under Section 9-03 of the *Standard Specifications*, aggregate finer than the specifications may be used provided the cement content is increased.)

Concrete is non-air entrained.

Proportioning for Bulk Specific Gravity

The masses of aggregates that used to be given in the *Standard Specifications* were for a bulk gravity of 2.67. These values must be corrected for the actual bulk specific gravity (G) of the materials used. The adjusted batch mass to be used is:

$$\text{Adjusted Batch mass} = \text{Batch mass} \times \frac{G}{2.67}$$

Metric

Example:

The mix proportions for Class 20 concrete are as follows in kg/m³.

Current batch masses:

Cement	320 kg
Fine Aggregate	775 kg
No. 2 Coarse Aggregates	1155 kg
Water	160 kg
	2410 kg

W/C (160/320) = 0.50

Batch masses corrected for bulk specific gravity:
(Aggregate masses rounded to nearest 5 kg.)

Cement		320 kg
Fine Aggregate	775 × (2.62/2.67) =	760 kg
No. 2 Coarse Aggregates	1155 × (2.76/2.67) =	1195 kg
Water		160 kg
		2435 kg

W/C (160/320) = 0.50

English

Example:

The mix proportions for Class 3000 concrete are as follows in pounds per cubic yard.

Current batch weights:

Cement	540 lbs.
Fine Aggregate	1,315 lbs.
No. 2 Coarse Aggregates	1,950 lbs.
Water	270 lbs.
	4,075 lbs.

W/C (270/540) = 0.50

Batch weights corrected for bulk specific gravity:
(Aggregate weights rounded to nearest 10 lbs.)

Cement		540 lbs.
Fine Aggregate	1,315 × (2.62/2.67) =	1,290 lbs.
No. 2 Coarse Aggregates	1,950 × (2.76/2.67) =	2,020 lbs.
Water		270 lbs.
		4,120 lbs.

W/C (270/540) = 0.50

Proportioning for Crushed Rock

Crushed rock is angular in shape and contains more voids than gravel. Unless a greater proportion of mortar is provided to fill the excess voids, the concrete will be harsh as compared to that made with gravel.

Example:

As a starting mix, the weight (mass) of crushed rock should be reduced by 8 percent of the weight (mass) of the coarse aggregate shown, corrected for bulk specific gravity. At the same time the weight (mass) of fine aggregate should be increased the same number of pounds (kilograms) that coarse aggregate was decreased.

In general, no additional changes in the starting mix would be needed because of the presence of crushed oversize gravel in coarse aggregate. In the absence of contrary instructions from the Olympia Service Center Materials Lab, no changes in cement per cubic yard (meter) would be necessary on account of the use of crushed rock in place of gravel as coarse aggregate. Decrease gravel 0.08 × 2020 = 162 (0.08 x 1155 kg = 93 kg); add same amount to fine aggregate.

Metric

Batch masses corrected for crushed rock: *(Aggregate masses rounded to nearest 5 kg.)*

Cement		320 kg
Fine Aggregate	(760 + 92) =	850 kg
No. 2 Coarse Aggregate	(1195 – 92) =	1105 kg
Water		160 kg
		2435 kg

W/C (160/320) = 0.50

English

Batch weights corrected for crushed rock: *(Aggregate weights rounded to nearest 10 lbs.)*

Cement		540 lbs.
Fine Aggregate	(1,290 + 162) =	1,450 lbs.
No. 2 Coarse Aggregate	(2,020 – 162) =	1,860 lbs.
Water		270 lbs.
		4,120 lbs.

W/C (270/540) = 0.50

Proportioning for Substandard Gradings

The *Standard Specifications* permit the use, within certain limits, of aggregate graded finer than the fine limits as specified, provided cement is added. A reduction of 1 percent in weight (mass) of aggregate per cubic yard (meter) of concrete will result in an increase of approximately 1 percent in cement content.

The use of finer gravel with extra cement ordinarily will not cause changes in workability sufficient to warrant revising relative proportions of sand and coarse aggregate in the starting mix.

When finer sand (fine aggregate) is used with extra cement, however, the mix is almost certain to be oversanded, dependent on the amount of excess fineness of the fine aggregate. The starting mix should, therefore, be revised in accordance with the following rule:

After reducing weights (masses) of both fine aggregate and coarse aggregate proportionally to result in the required change in cement content, further reduce the weight (mass) of fine aggregate at the rate of $^2/_3$ pound per 100 pounds (0.67 kg per 100 kg) of cement for each 1 percent the fine aggregate passing each sieve is in excess of the maximums. Increase the coarse aggregate by the same number of kilograms (pounds) that the fine aggregate has been reduced to control over-sanding.

Metric

Example:

Consider a fine aggregate having a gradation as follows:

Percent Passing

Screen Size mm	Gradations Sample	Allowable* Specifications	Excess Maximum	Fineness
4.75	100	95-100		
3.35	97	82-98		
2.36	93	68-86	95	7
1.18	75	47-65	80	10
0.60	50	27-42	60	8
0.30	19	9.0-20.0	20	
0.15	6	0.0-7.0		
0.075	2.0	0.0-2.5	2.5	
				25%

*As designated in the *Standard Specifications*.

The 25 percent of excess fineness of fine aggregate requires an increase of 8 percent cement, calculated on the basis of $^1/_3$ percent for each percent of excess fineness ($25 \times {}^1/_3 = 8$). The desired cement content will be (320×1.08) = 346 kg per cubic meter.

The fine aggregate should next be decreased by ($^2/_3 \times .25 \times 346$) = 57.7 kg to avoid over sanding. The coarse aggregate should be increased a like amount.

Batch masses corrected for substandard gradings: *(Aggregate masses rounded to nearest 5 kg.)*

Cement		346 kg
Fine Aggregate	(850 – 58) =	790 kg
No. 2 Coarse Aggregate	(1105 + 58) =	1165 kg
Water		160 kg
		2461 kg

W/C (160/346) = 0.46

English

Example:

Consider a fine aggregate having a gradation as follows:

Percent Passing

Screen Size	Gradations Sample	Allowable* Specifications	Excess Maximum	Fineness
4	100	95-100		
6	97	82-98		
8	93	68-86	95	7
16	75	47-65	80	10
30	50	27-42	60	8
50	19	9.0-20.0	20	
100	6	0.0-7.0		
200	2.0	0.0-2.5	2.5	
				25%

*As designated in the *Standard Specifications*.

The 25 percent of excess fineness of fine aggregate requires an increase of 8 percent cement, calculated on the basis of $^1/_3$ percent for each percent of excess fineness ($25 \times {}^1/_3 = 8$). The desired cement content will be (540×1.08) = 583 pounds per cubic yard.

The fine aggregate should next be decreased by ($^2/_3 \times .25 \times 583$) = 97 pounds to avoid over sanding. The coarse aggregate should be increased a like amount.

Batch weights corrected for substandard gradings: *(Aggregate weights rounded to nearest 10 lbs.)*

Cement		583 lbs.
Fine Aggregate	(1,450 – 97) =	1,350 lbs.
No. 2 Coarse Aggregate	(1,860 + 97) =	1,960 lbs.
Water		270 lbs.
		4,163 lbs.

W/C (270/583) = 0.46

Proportioning for Free Water in Aggregates

Free water is the water available in the aggregates that will combine with the cement during the mixing process in addition to the mix water added and if not accounted for will reduce the strength of the concrete. The planed mixing water is reduced by an amount of free water present in the aggregates in order to ensure the maximum water/cement ratio is not exceed or water/cementitious ratio where fly ash is used.

The free water is defined as the amount of water present in the aggregates above the amount of absorbed water. Absorbed water will not be released by the aggregates during mixing of the concrete. The absorbed water is reported on the Pit Report and is expressed as a percentage of the weight (mass) of the aggregates.

The Moisture content of the aggregates is the total water in the aggregates expressed as a percentage of the dry weight (mass) of the aggregates. The free water can be determined by subtracting the amount absorbed water (absorbed content × dry weight (mass) of the aggregates) from the total water in the aggregates (moisture content × dry weight (mass) of the aggregates).

Metric

Example:

The total amount of water permitted in the mix includes both the free water in the aggregates and the total mixing water (added at the plant and any water added in route to or on the project). For example, consider a Class 20 mix which has been determined to have a maximum water content of 160 kg per cubic meter.

Batch masses corrected for substandard gradings:
(Aggregate masses rounded to nearest 5 kg.)

Cement	346 kg
Fine Aggregate	790 kg
Coarse Aggregates	1165 kg
Water	160 kg
	2461 kg

W/C (160 kg of water/346 kg of cement) = 0.46

Current tests of the aggregate stockpiles shows the moisture content as follows:

Fine Aggregates	4.0 percent
Coarse Aggregates	1.2 percent

The Pit Report from Olympia Service Center Materials Laboratory shows the amount of absorption as follows:

Fine Aggregates	1.5 percent
Coarse Aggregates	1.0 percent

Total Water in Aggregates:

Fine Aggregates	790 kg × 0.04 = 32 kg
Coarse Aggregates	1165 kg × 0.012 = 14 kg

Absorbed Water in Aggregates:

Fine Aggregates	790 kg × 0.015 = 12 kg
Coarse Aggregates	1165 kg × 0.010 = 12 kg

Free Water in Aggregates:

Fine Aggregates 32 kg of total water – 12 kg of absorbed water = 20 kg of free water

Coarse Aggregates 14 kg of total water – 12 kg of absorbed water = -2 kg of free water

Total Free Water in Aggregates: 20 kg from Fine Aggregates + 2 kg from Coarse Aggregates = 22 kg

Deducting free water gives 138 kg of allowable mixing water.

(160 kg – 22 kg) = 138 kg of allowable mixing water

The aggregate masses should be increased to reflect the free water and the amount of water added should be decreased to maintain the maximum water/cement ratio.

Batch masses corrected for free water in aggregates:
(Aggregate masses rounded to nearest 5 kg.)

Cement		346 kg
Fine Aggregates	790 + 32 kg =	820 kg
No. 2 Coarse Aggregates	1165 kg + 14 kg =	1180 kg
Water		139 kg
		2485 kg

W/C (160 kg of water/346 kg of cement) = 0.46

English

Example:

The total amount of water permitted in the mix includes both the free water in the aggregates and the total mixing water (added at the plant and any water added in route to or on the project). For example, consider a Class 3000 mix which has been determined to have a maximum water content of 270 pounds per cubic yard. This is calculated to be 270 lbs./8.34 lbs./gallon = 32.4 gallons.

Batch weights corrected for substandard gradings:
(Aggregate weights rounded to nearest 10 lbs.)

Cement	583 lbs.
Fine Aggregate	1,350 lbs.
Coarse Aggregates	1,960 lbs.
Water	270 lbs.
	4,163 lbs.

W/C (270 lbs. of water/583 lbs. of cement) = 0.46

Current tests of the aggregate stockpiles shows the moisture content as follows:

Fine Aggregates	4.0 percent
Coarse Aggregates	1.2 percent

The Pit Report from Olympia Service Center Materials Laboratory shows the amount of absorption as follows:

Fine Aggregates	1.5 percent
Coarse Aggregates	1.0 percent

Total Water in Aggregates:

Fine Aggregates	1,350 lbs. × 0.04 = 54 lbs.
Coarse Aggregates	1,960 lbs. × 0.012 = 24 lbs.

Absorbed Water in Aggregates:

Fine Aggregates	1,350 lbs. × 0.015 = 20 lbs.
Coarse Aggregates	1,960 lbs. × 0.010 = 20 lbs.

Free Water in Aggregates:

Fine Aggregates 54 lbs. of total water – 20 lbs. of absorbed water = 34 lbs. of free water

Coarse Aggregates 24 lbs. of total water – 20 lbs. of absorbed water = 4 lbs. of free water

Total Free Water in Aggregates: 34 lbs. from Fine Aggregates + 4 lbs. from Coarse Aggregates = 38 lbs.

Deducting free water gives 232 lbs. of allowable mixing water.

(270 lbs. – 38 lbs.) = 232 lbs. of allowable mixing water

The aggregate weights should be increased to reflect the free water and the amount of water added should be decreased to maintain the maximum water/cement ratio.

Batch weights corrected for free water in aggregates:
(Aggregate weights rounded to nearest 10 lbs.)

Cement		583 lbs.
Fine Aggregates	1,350 lbs. + 54 lbs. =	1,400 lbs.
No. 2 Coarse Aggregates	1,960 lbs. + 24 lbs. =	1,980 lbs.
Water		232 lbs.
		4,195 lbs.

W/C (270 lbs. of water/583 lbs. of cement) = 0.46

Correction for Cement Content

Determine the unit weight (mass) of the concrete, using ASSHTO Test Method T 121, of the first two trucks that meet all applicable acceptance test requirements. Using the unit weight (mass), calculate the yield and cement content, adjusting the calculations for a design air content of 6 percent if the mix is entrained. Average the two cement contents and compare the averaged cement content to the minimum cement content specified.

If the averaged calculated cement content is 10 pounds per cubic yard (5 kg per cubic meter) less than the minimum cement content specified, an adjustment is required. If a mix proportion adjustment is necessary, the adjustment shall be accomplished by adjusting the aggregate only. The fine to coarse aggregate ratio shall be maintained when the concrete mix is adjusted. The yield and cement content calculations should be provided to the contractor.

Metric

Example:

The cement content is determined to be 340 kg per cubic meter whereas the minimum cement content of 346 kg per cubic meter was specified. This amount is 6 kg per cubic meter less, so an adjustment is required. The aggregate masses should be decreased. The batch masses should be corrected as follows:

Fine Aggregates	820 kg × 340/346 = 805 rounded to nearest 5 kg 15 kg decrease
Coarse Aggregates	1180 kg × 340/346 = 1160 kg rounded to nearest 5 kg 20 kg decrease

Batch masses corrected for cement content:
(Aggregate masses rounded to nearest 5 kg.)

Cement	346 kg.
Fine Aggregates	805 kg
Coarse Aggregates	1160 kg
Water	139 kg
	2450 kg

W/C (160 kg of water/346 kg of cement) = 0.46

English

Example:

The cement content is determined to be 568 pounds per cubic yard whereas the minimum cement content of 583 pounds was specified. This amount is 15 pounds per cubic yard less, so an adjustment is required. The aggregate weights should be increased. The batch weight should be corrected as follows:

Fine Aggregates	1,400 lbs. × 568/583 = 1,360 lbs. rounded to nearest 10 lbs. 40 lb. decrease
Coarse Aggregates	1,980 lbs. × 568/583 = 1,930 lbs. rounded to nearest 10 lbs. 50 lb. decrease

Batch weights corrected for cement factor: *(Aggregate weights rounded to nearest 10 lbs.)*

Cement	583 lbs.
Fine Aggregates	1,360 lbs.
Coarse Aggregates	1,930 lbs.
Water	232 lbs.
	4,105 lbs.

W/C (270 lbs. of water/583 lbs. of cement) = 0.46

Revision for Workability (Example)

During the placing of the first truck, some difficulty was found in the region of a group of closely spaced reinforcing bars. The same situation will exist on the next pour. It is decided to increase the fine aggregate content somewhat and the entire 90-pound (35 kg) decrease (as calculated previously) for cement content is deducted from the coarse aggregate. The new batch masses are as follows:

Metric

Batch masses corrected for workability: *(Aggregate masses rounded to nearest 3 kg.)*

Cement		346 kg
Fine Aggregate		820 kg
No. 2 Coarse Aggregate	(1180 – 35)	1145 kg
Water		139 kg
		2450 kg

W/C (160/346) = 0.46

English

Cement		583 lbs.
Fine Aggregate		1,400 lbs.
No. 2 Coarse Aggregate	(1,980 – 90)	1,890 lbs.
Water		232 lbs.
		4,105 lbs.

W/C (270/583) = 0.46

The goal should be to use the lowest percentage of fine aggregate that is consistent with job conditions and will permit placing the concrete without voids and finishing it to a satisfactory surface. If the mix is undersanded, however, the tendency will be to make up for a lack of inherent workability by using an excessive amount of mixing water. Such concrete tends to segregate in handling and placing and is to be avoided. The sand content of the mix, however, should not be increased merely to relieve the Contractor of the work of vibrating that is required to be performed under the specifications.

A grossly oversanded mix will be recognized by the apparent shortage of coarse aggregate and by its “sticky” character. Those particles of coarse aggregate that are readily visible will appear to be floating independently in a matrix of mortar. In a badly undersanded mix, the coarse aggregate will be very conspicuous, the concrete will be hard to handle with a shovel regardless of its wetness and there will be a marked tendency for separation of the mortar from the coarse aggregate. Between these extreme limits, the best mix must be determined by experience and careful study of the results obtained during placing of the concrete and upon removal of the forms.

If the fine aggregate is graded near the coarse limits of the specifications and the coarse aggregate is near the fine limit, the concrete is apt to be harsh. Increasing the fine aggregate content in such cases probably will not result in much improvement. The grading of the fine aggregate and the coarse aggregate should be improved. The *Standard Specifications* require rejection or alteration of the aggregates when the resulting concrete is too harsh.

Generally speaking, a reduction or increase of 20 pounds (20 kg) of fine aggregate per 100 pounds (100kg) of cement will make a pronounced change in the appearance and workability of the concrete. The Project Engineer should work within these limits (after revising proportions of the starting mix as outlined in Chapter 6-2 of this manual) to secure the best results possible. Changes should be made only after consultation with the Olympia Service Center Materials Lab.

P65:DP/CM

Page

7-1 Drains 7-1
7-1.1 Roadway Subdrainage 7-1
7-1.2 Installation of Drains 7-1
7-1.3 Measurement and Payment 7-1

7-2 Culverts 7-1
7-2.1 General Instructions 7-1
7-2.2 Roadway Surface Drainage 7-2
7-2.3 Design of Culverts 7-2
7-2.4 Installation of Culverts 7-2
7-2.4A Grade and Flow Line 7-2
7-2.4B Foundation 7-2
7-2.4C Bedding 7-3
7-2.4D Backfill 7-3
7-2.4E Placement of Fill Over Culverts 7-4
7-2.5 Measurement and Payment 7-4

7-3 Structural Plate Pipe, Pipe Arch, Arch, and Underpass 7-4
7-3.1 General Instructions 7-4
7-3.2 Measurement and Payment 7-4

7-4 Storm Sewers 7-4
7-4.1 General Instructions 7-4
7-4.2 Sewer Trench 7-5
7-4.3 Measurement and Payment 7-5

7-5 Manholes and Catch Basins 7-5

P65:DP/CM

7-1 Drains

7-1.1 Roadway Subdrainage

Underground streams and seepage zones which require installation of water collection systems may be encountered in roadway excavation. The gradation of gravel used in water interception channels is of prime importance. Gravel backfill for drains has been developed for this use. This drain material is an open graded gravel which will become plugged with infiltered fines if not protected with a filter. It should always be used with a filter cloth which has proven effective in inhibiting the infiltration of fines.

When installing perforated drain pipe, the perforations should be in the lower half of the pipe. This will minimize infiltration of fine material and ensure longer service.

Where a subdrain installation is intended to pick up flow from intermittent seepage zones, nonperforated pipe should be used between the seepage areas to avoid possible loss of water into otherwise dry areas. In some cases, it may be necessary to supplement the pickup system with a carrier pipe system.

The Project Engineer's attention is directed to the fact that control of water during construction is the responsibility of the Contractor. See Chapter 2-3.4 of this manual for temporary water pollution/erosion control.

7-1.2 Installation of Drains

Most of the instructions for the installation of culverts covered in Chapter 7-2.4 of this manual are equally applicable to the installation of drains.

7-1.3 Measurement and Payment

Measurement and payment for structure excavation is covered in Sections 2-09.4 and 2-09.5 of the *Standard Specifications*. Measurement and payment for drain pipe and gravel backfill for drains is covered in Sections 7-01.4 and 7-01.5 of the *Standard Specifications*.

7-2 Culverts

7-2.1 General Instructions

The life of the roadway depends largely upon proper drainage, and it is essential to give diligent attention to adequacy as well as to quality of construction. In addition to providing for the passage of existing natural drainage channels through the project, a highway drainage system must provide for the collection and disposal to natural drainage channels of all rainfall on the right of way and of all ground water flow that may be intercepted during roadway construction.

It is attempted during location and planning to provide for necessary drainage systems, however, particularly with respect to underground water flow, it is impossible to foresee all drainage problems that may result from the construction of the highway. It is the responsibility of the Project Engineer to evaluate the sufficiency of the provided drainage systems and to initiate action for changes or additions where necessary.

The Project Engineer should carefully review all provisions of the applicable Environmental Impact Statement, right of way agreements, and other commitments made by the Washington State Department of Transportation (WSDOT) which have direct bearing on the project. Many of these commitments involve drainage matters. Although such elements should have been incorporated into the design, in some cases, they have been overlooked or require revision. Such a lack of oversight which directly affects adjacent property or individuals is sure to trigger an immediate negative response reflecting on WSDOT integrity.

The Project Engineer should go over the project, particularly during severe storms, closely observing the quantity and action of the storm water runoff to determine the sufficiency of openings and ditches or the need for larger openings and ditches than those contemplated, reporting the results of this observation to the Regional Office. Any changes made in the size of drainage openings must be approved by the Regional Office before the Contractor is advised of the change.

Tables showing the allowable heights of embankments over the various types of pipes are in the *Standard Specifications* and the *Hydraulics Manual*. Quite often, upon locating culverts to fit the drainage conditions, the height of embankment is more than was anticipated during the location work. After the culverts are staked, a check should be made to see that the allowable embankment height for the particular type of pipe is not exceeded.

Pipe arches shall not be constructed until the site has been investigated by the Regional Materials Engineer and the materials and methods for the construction have been approved by the Regional Materials Engineer.

7-2.2 Roadway Surface Drainage

Curb and gutter systems must be constructed in such a manner that water will not pond on the roadway or flow at random over fill slopes. Manholes, catch basins, and spillways should be checked for location, size, and number to ensure efficient removal of collected water. Controlled drainage should be carried to a point beyond the roadway to where damage to the roadway cannot occur.

Water pockets are very apt to be formed in superelevation transitions and roadway width transitions, especially where the roadway grade line is quite flat. It is necessary that the Project Engineer investigate these areas to be sure that proper drainage is installed.

In placing the grates for catch basins and gutter inlets, it is imperative that they are placed at the proper elevation. If they are placed too low, they constitute a traffic hazard and if they are placed too high, they will not intercept the water. In keeping with design safety requirements, many culvert entrance structures utilize catch basins or grate inlet facilities. Such installations are particularly susceptible to deciduous debris and roadside trash. Grate opening size allowing passage of such debris is very critical in rural and mountainous locations.

Surface ditches may be necessary above cut slopes to prevent water from flowing over the cut face. Roadside ditches at the ends of cut sections should be diverted well away from the adjacent embankment to avoid erosion of the fill material.

7-2.3 Design of Culverts

Present standard design practice permits the Contractor to select the type of culvert and drain pipe to be installed except in those instances where a specific type is called for in the plans. Approved types are detailed in the contract plans and specifications.

When changes or additions are determined necessary by the Project Engineer, consideration must be given to the type of pipe being furnished to the project. Specific types should be required only when engineering considerations substantiate that preference should be given to one type or another.

Corrugated metal pipe arches fill a need where headroom above the invert is restricted and where more capacity and wider clearance for discharge of debris is required than would be afforded by a multiple pipe installation. Due to the method of forming the pipe arches, it is usually more difficult to obtain a well-fitting joint. The construction of the joints must receive careful attention when the installation is in material susceptible to erosion.

7-2.4 Installation of Culverts

The ability of the culvert to withstand the height of cover as shown in the tables is based on the culvert being constructed in accordance with the *Standard Specifications* and the *Standard Plans*. All phases of culvert installation should receive thorough attention and inspection to achieve that end.

7-2.4A Grade and Flow Line

Unless shown otherwise in the plans, the flow line grade of a culvert should match the stream channel which it replaces. Where the flow line grade of a culvert is relatively steep, debris and sediments tend to pass more easily through the culvert, but increased abrasion in the invert and increased erosion potential at the outlet can be expected. Where the flow line grade is relatively flat, sediment deposition within the culvert can become a problem. This is especially true with culverts that are placed on a flatter grade than the existing stream channel.

When necessary to construct an inlet channel to the culvert, the channel shall provide a smooth transition into the culvert without constricting the flow.

The destruction of vegetation, and rip rap resulting from the modification of culverts will lead to an increase in erosion around the culvert. The outlet side of the culvert is particularly susceptible to increased damage, even under normal flow. If you disturb or change either the culvert inlets or outlets during construction, consideration needs to be given to providing protection. This protection should extent upstream or downstream as needed. At the completion of the work all culvert inlets, outlets, and the channels leading to and from them shall present a neat and workmanlike appearance. At the completion of the contract, they shall be open and ready for operation.

7-2.4B Foundation

Care must be taken to ensure that the ground upon which pipes are to be laid has sufficient stability to support the pipe without excessive or nonuniform settlement. Where the underlying soil is soft or spongy, or subject to excessive consolidation under load, adequate support shall be obtained by excavating and removing the unstable soil and replacing it with satisfactory (usually granular) material, provided this procedure is feasible. In some cases, installation of the pipe should also be laid with a slight camber to overcome anticipated settlement. Where the unstable foundation soil is of such depth that the above procedure is not practical, other means must be used. This may involve the use of partial backfill of granular material to spread the load, placement of a timber or brush mat, the construction of a pile and timber cradle, or other such means. Before selecting a method, the Regional Materials Engineer should be consulted.

Uniformity of support is essential to successful installations. Where transition is made from foundation soils that may consolidate to firm, unyielding ground, special consideration should be given to the transition zone.

7-2.4C Bedding

Where pipe is laid on existing ground, care must be taken to ensure full, uniform support along the barrel of the pipe. Hand shaping and checking with a template may be necessary. When placing concrete pipe with bell-type joints, depressions must be constructed to receive the bell so that full barrel support is achieved. Isolated stones or boulders which may cause point bearing must be removed.

When granular bedding material is used (as is usually the case in trench construction or where rock soils exist), workers sometimes become careless on the assumption that the bedding material will in itself ensure adequate support. Inspection should ensure that proper depth is used and that the pipe is seated in the bedding material to provide full, uniform barrel support.

Care must be exercised in placing pipe in rock fills or where solid rock, hardpan, or cemented gravel is encountered. Pipe installed on these hard materials must be bedded on a cushion of suitable earth, fine gravel, or sand at least 6 inches (150 millimeters) in depth to eliminate concentrated points of loading.

Gravel having sizes larger than 1 inch (25 millimeters) should not be used for bedding material. The importance of good quality material and good installation practices cannot be overstressed. The load supporting capacity of the pipe is directly affected by the quality of the bedding.

When suitable material is not readily available on the project for bedding the pipe, Gravel Backfill for Pipe Zone Bedding should be used. Normally, this material is to be used only from 6 inches (150 millimeters) below the pipe to the limits shown on the *Standard Plans*. In areas of rock embankment, where there is only fragmentary rock material available on the jobsite to backfill the pipe installation, gravel backfill for pipe zone bedding should be used for the backfill within 12 inches (300 millimeters) of the sides and top of the pipe. If it is necessary to remove the material under the pipe excavation zone to produce a firm foundation, this void should be backfilled with Gravel Backfill for Foundations which is more stable than Gravel Backfill for Pipe Zone Bedding.

If the Engineer deems it desirable or necessary to construct part of the embankment prior to construction of the culvert, the embankment shall be constructed at least 5 diameters of the culvert each side of the installation and compacted to 95 percent of the maximum density of the material. The embankment shall be constructed to a minimum height above the pipe invert elevation of at least one half the diameter of the pipe, more if equipment is to be routed over the pipe installation. No tractors or other heavy equipment shall be operated over the top of the pipe until the backfill has reached a height of 2 feet (0.6 meters) above the top of the pipe. If the Contractor elects to construct the embankment to final grade, shoring will be required for embankments more than 4 feet (1.22 meters) in height above the bottom of the trench. The upper limit for measurement of structure excavation is a maximum of 4 feet (1.22 meters) above the invert of the pipe as specified in Section 2-09.4 of the *Standard Specifications*.

Concrete pipe must be laid with the bell or groove end up grade. Metal pipe with riveted or resistance spot welded seams must be laid with the outside laps of circumferential joints pointing up grade and with the longitudinal laps positioned other than in the invert.

It is important that concrete pipe with elliptical reinforcement, fabricated to form an elliptical section, be installed with the “top” or “bottom” position as marked on the pipe exactly on the vertical axis. There are special cases, such as on side-hill installations, where the imposed load will be at some angle other than vertical. In these cases, the pipe should be tilted to meet the direction of load. Theoretically, a small departure from the correct position does not greatly affect the supporting strength of the pipe, as the reinforcement cages may not be shaped to true ellipses, or they may not remain in the true shape during placing of the concrete. Practically, the steel may be in such a position that a large percentage of its effectiveness is lost a short distance away from the vertical axis. Elliptically reinforced concrete pipe is manufactured with lift holes in the top of the pipe or is clearly marked to simplify true positioning. Many culvert pipe failures have resulted because of carelessness in installation with respect to position of the vertical axis.

7-2.4D Backfill

The load supporting strength of any pipe is directly affected by the condition of the material around and above the pipe as well as the bedding material under the pipe. In general, the higher the degree of compaction of the fill or backfill under the haunches and along the sides of the pipe, the less the pipe will deform under load. Also, the higher the compaction, the less the material along side the pipe will consolidate. Consolidation can result in an increased transfer of embankment load onto the pipe. For these reasons, the backfill or embankment material adjacent to the pipe should be selected material free from large rocks and lumps, containing sufficient fines so that it will compact to a relatively impervious mass and it must be compacted to a density and width not less than that required by the *Standard Specifications* or *Standard Plans*.

Care must be taken to obtain proper compaction under the haunches of the pipe and to place and compact the backfill uniformly on both sides of the culvert. Firm support must be obtained. Caution shall be used to avoid over-tamping to the extent that the pipe is lifted out of position.

Many failures of culvert pipe in the past could have been avoided by proper backfilling. No type of pipe can withstand heavy embankment loads unless the backfilling is performed in strict accordance with the *Standard Plans* for Pipe Zone Bedding and Backfill and the *Standard Specifications*.

7-2.4E Placement of Fill Over Culverts

The load that will be imposed on a culvert pipe is affected largely by the manner in which the embankment around and above the culvert is constructed. The maximum height of fill allowable over various sizes and types of pipe and pipe arch culvert is dependent upon backfilling and constructing the embankment over the culvert in strict compliance with the *Standard Plans* and the *Standard Specifications*. Careful attention shall be given to constructing pipe installations in accordance with the appropriate standard except as modified by special provisions.

Equipment shall not be permitted to operate across the culvert until the embankment has been constructed 2 feet (600 millimeters) above the culvert. The operation of equipment over the culvert installation shall be in accordance with Section 1-07.7 of the *Standard Specifications*.

Mitered ends of metal and thermoplastic culverts may require some type of weighted protection to keep the end of the culvert from floating due to hydrostatic pressure. Usually concrete headwalls are specified for this purpose. Concrete headwalls must be constructed as soon as the embankment is constructed to the height of the headwall so the mitered ends of the culvert will be protected when the first storm is encountered.

7-2.5 Measurement and Payment

Measurement and payment for structure excavation is covered in Sections 2-09.4 and 2-09.5 of the *Standard Specifications*. There is no specific unit of measurement or payment for any bedding or backfill material placed in the pipe zone, as covered in Sections 7-08.4 and 7-08.5 of the *Standard Specifications*. All costs associated with furnishing and installing the bedding and backfill material within the pipe zone are included in the unit contract price for the pipe. Measurement and payment for pipe and end sections are covered in Sections 7-02.4 and 7-02.5 of the *Standard Specifications*.

It should be noted that if the Contractor constructs pipe in excess of the length designated by the Engineer, the excess length will not be measured or paid for. It is quite often undesirable to have culvert pipe constructed in excess of the necessary length from both hydraulic and aesthetic considerations thus the Engineer should have the excess removed at the contractor's expense when this occurs.

7-3 Structural Plate Pipe, Pipe Arch, Arch, and Underpass

7-3.1 General Instructions

Most of the instructions for the construction of culverts covered in Chapter 7-2 of this manual are equally applicable to the construction of structural plate pipes, pipe arches, arches, and underpasses.

In the construction of multi-plate structures, it is quite important that the bottom plates be correctly positioned for alignment and grade of their edges before the other plates of the section are bolted up so the completed structure will be in proper alignment. Manufacturers of multi-plate structures normally supply detailed assembly instructions with their multi-plates, which should be closely followed, as they will prevent creep or spiral. If the structure starts to creep or spiral, the only way to correct this condition is to remove the plates to where it is in correct alignment and reconstruct the structure.

High-strength bolts are used in bolting the plates together. In order for the connections to function as designed, the bolts must be tightened to the specified tension. Chapter 6-3.6B covers the instructions for construction and inspection of high tensile strength bolts. Impact wrenches must be calibrated as specified since overtightening may overstress the bolts and under-tightening will not give the connection the required strength. If more than one crew is assembling the structure, the impact wrenches must be calibrated to tighten the bolts to the same torque.

7-3.2 Measurement and Payment

Measurement and payment instructions are covered in Sections 7-03.4 and 7-03.5 of the *Standard Specifications*.

7-4 Storm Sewers

7-4.1 General Instructions

Most of the instructions for the construction of culverts covered in Chapter 7-2 of this manual are equally applicable to the construction of storm sewers.

The grade line that storm sewers are constructed on is rather critical since the capacity of the pipe is dependent on its flow line grade. The storm sewer system has been designed to carry the anticipated flow if it is constructed on the grade lines shown in the plans. It is quite important that the effect on the capacity of the pipe be checked whenever it becomes necessary to vary the flow line grade to avoid obstacles that may be encountered on construction.

Careful attention must be paid to the construction of the joints or the storm sewer line may not meet the tests that may be required in the contract.

7-4.2 Sewer Trench

Trenches shall be constructed as specified in Section 7-08.3(1)A of the *Standard Specifications*.

If the trench is 4 feet (1.22 meters) or more in depth, Shoring and Cribbing shall be constructed or the sides of the trench sloped as necessary to protect the workers in the trench. See Section 2-09.3(4) of the *Standard Specifications* and Chapter 2, Section 2-9.1, of this manual.

Backfilling will be in accordance with Section 7-08.3(3) of the *Standard Specifications*.

7-4.3 Measurement and Payment

Similar to culvert installations, measurement and payment for structure excavation is covered in Sections 2-09.4 and 2-09.5 of the *Standard Specifications*. There is no specific unit of measurement or payment for any bedding or backfill material placed in the pipe zone, as covered in Sections 7-08.4 and 7-08.5 of the *Standard Specifications*. All costs associated with furnishing and installing the bedding and backfill material within the pipe zone are included in the unit contract price for the pipe.

7-5 Manholes and Catch Basins

The instructions for this work are described in Section 7-05 of the *Standard Specifications*.

P65:DP/CM

Page

Introduction 8-1

8-1 Erosion Control 8-1
8-1.1 General Instructions 8-1
8-1.2 Construction Practices 8-1
8-1.3 Measurement and Payment 8-2

8-2 Roadside Planting 8-2
8-2.1 General 8-2
8-2.2 Landscape Terminology 8-3
8-2.3 Reference Reading 8-6
8-2.4 Inspection of Planting Stock 8-6
8-2.5 Layout 8-8
8-2.6 Materials 8-10
8-2.7 Progress Schedule 8-11
8-2.8 Inspection During the Plant Establishment Period 8-12
8-2.9 Measurement and Payment 8-13

8-3 Irrigation System 8-13
8-3.1 General 8-13
8-3.2 Layout 8-13
8-3.3 Materials 8-13
8-3.4 Inspection 8-14
8-3.5 Installation 8-14
8-3.6 Cross-connection Control, Backflow Prevention 8-15
8-3.7 Serving Utility 8-15
8-3.8 As-Built Plans and System Orientation 8-15
8-3.9 Measurement and Payment 8-15

8-4 Curbs, Gutters, Spillways, and Inlets 8-15
8-4.1 General 8-15

Page

8-11 Guardrail 8-16
8-11.1 General Instructions 8-16
8-11.2 Erection of Posts 8-16
8-11.3 Terminals 8-16
8-11.4 Measurement and Payment 8-16

8-12 Chain Link Fence and Wire Fence 8-16
8-12.1 General 8-16
8-12.2 Clearing and Grading 8-16
8-12.3 Measurement and Payment 8-16

8-14 Cement Concrete Sidewalks 8-16
8-14.1 General 8-16
8-14.2 Placing, Finishing, and Curing Concrete 8-17
8-14.4 Measurement and Payment 8-17

8-20 Illumination, Traffic Signal Systems, and Electrical 8-17
8-20.1 General 8-17
8-20.2 Materials 8-17
8-20.2A Approval of Source 8-17
8-20.2B Shop Drawings for Illumination and Signal Standards 8-17
8-20.3 Relations With the Serving Utility 8-18
8-20.4 Inspection 8-18
8-20.5 As-Built Plans 8-19
8-20.6 Construction 8-19
8-20.6A Foundations 8-19
8-20.6B Conduit 8-19
8-20.6C Junction Boxes 8-19
8-20.6D Wiring 8-19
8-20.6E Ground 8-19
8-20.6F Lighting Standards, Strain Poles 8-20
8-20.6G Existing Illumination Systems 8-20
8-20.6H Service Equipment 8-20
8-20.6I Traffic Signal Systems 8-20
8-20.6J Testing 8-20
8-20.6K Electrical Safety Tags 8-20
8-20.7 Prevention of Corrosion of Conduit 8-20
8-20.8 Measurement and Payment 8-21

Page

8-21 Permanent Signing 8-21
8-21.1 General 8-21
8-21.2 Sign Location 8-21
8-21.3 Approval of Materials 8-22
8-21.4 Inspection 8-22
8-21.5 Bolting Base Connections 8-22
8-21.6 Measurement and Payment 8-22

P65:DP/CM

Introduction

Many of the specifications in Division 8 of the *Standard Specifications* are complete and do not require additional instructions for proper staking, inspecting, and documenting the construction, and will not be covered in this manual.

Although many items of construction in this chapter are specialized, the procedures of sampling the materials, documenting the construction, and requiring that the work be done in accordance with the specifications is not different from other types of highway construction work.

8-1 Erosion Control

8-1.1 General Instructions

Project sites require erosion prevention when vegetation is removed, when soil is disturbed, or when water flow has the potential to cause erosion. Vegetation stabilizes soils. It slows or prevents erosion by intercepting rainfall, reducing the impact of rain drops, and retaining and retarding runoff volume.

The Contractor is required to submit and obtain approval from the Engineer for a Temporary Erosion Control Plan. This plan includes both temporary water pollution and erosion control measures. The effectiveness of these measures should be continually maintained, monitored and documented. Regulatory Agencies have the right to and do visit our projects to review these items. Many of these Regulatory Agencies have the power to levy fines or shot down our projects.

After the slope stakes are set, a thorough review of the project should be made. This is recommended to ensure that all surface water within the project is controlled. It is important that runoff to adjacent property not be permitted except in natural water courses. Federal, state, and local water quality regulations prohibit the discharge of turbidity from construction activities into adjacent water bodies and require WSDOT to use approved prevention and control methods. Turbidity is defined as the visual clarity of the water and is a measure of its condition or health. Turbidity is really a measure of how much stuff is in the water (suspended and colloidal matter, such as clay, silt, organic matter, inorganic matter, and microorganisms). See Section 710, Erosion Prevention and Sediment Control, of the *Roadside Manual*, M 25-30, for additional information.

In rural areas, Soil Conservation District personnel are available for consultation in all matters related to erosion control. They know the local areas and their interests are similar to ours. If the local soil conservation district has not been consulted during the design stage, they should be consulted during the construction stage.

Whenever the ground slopes so the surface water would drain over the cut slope, the Project Engineer should investigate the need for constructing ditches longitudinally along the roadway to intercept the water or making use of down drains. A review of soil types is quite important. If erodible soils are in evidence, special consideration must be given to reducing erosion when these materials are encountered in cuts or used in embankment construction on the project.

There will be times when subsurface water is encountered in the slopes of a cut section. The Project Engineer should notify the Regional Operations/Construction Engineer if this occurs. In most cases, some corrective action will be necessary whether it be perforated pipe or other methods. There are some cases where the Regional Operations/ Construction Engineer may want to consult with the Materials Engineer on matters and ways of controlling the flow of subsurface water.

8-1.2 Construction Practices

Erosion problems can lead to unsightly slopes and add to the maintenance problems after completion of the project and, in some cases, create a safety hazard and water pollution if not properly taken care of during construction. Table 710.1 of the *Roadside Manual*, M 25-30, gives recommended Erosion Prevention Practices. For site specific recommendations, contact the Regional Landscape Architect, the OSC Roadside and Site Development Unit (Design Office), or the OSC Environmental Affairs Erosion Control Specialist.

Many problems can be prevented in the initial stages of construction if the Contractor will protect the roadway as the work progresses to prevent water from running over fill slopes by sloping or crowning the area and eliminating duck ponds or low spots. Poor construction practices can, in the long run, cost the Contractor additional money to correct the damage.

The permanent protection of earth fill and cut slopes should be accomplished as soon as possible. When provided in the contract, top soil should be evenly placed on the slopes at the specified depth for areas to be seeded. After placement of top soil, large clods, hard lumps, rocks 2 inches (50 millimeters) in diameter or larger, and litter shall be raked up, removed, and disposed of by the Contractor.

Areas to be seeded with out top soils are to be prepared after final grading so that the soil surface is rough and loose, with ridges and furrows (narrow depressions) perpendicular to the slope or to the natural flow of water. This will slow the water velocity, increase water detention and infiltration, decrease runoff, and promote grass growth. This can be done through the use of a cleated roller, crawler tractor, or similar equipment.

Seed and fertilizer are to be uniformly applied on the slopes at the rate and mixture specified in the contract. Application shall be by an approved hydro-seeder, blowing equipment, properly equipped helicopters or power drawn drills or seeders. Where areas are inaccessible for this equipment, or when specified, approved hand seeding will be permitted.

In order for the Contractor to order the proper amount of materials for the project and to provide the Inspector a method of checking the rate of application of the seed and fertilizer, the Project Engineer should measure the areas to be seeded and fertilized as soon as they can be determined and inform the Contractor of the anticipated acreage. If, in the opinion of the Engineer, the seeding and fertilizing areas can be accurately determined using digital terrain modeling or other design data, the Engineer has the option of using this data in lieu of field measuring. During the seeding and fertilizing operation, the Inspector shall see that the material is placed at a uniform rate and compare the amount of seed and fertilizer applied with the area covered to verify that the proper rate of application is being placed.

The seed and fertilizer may be applied in one application provided the seed and fertilizer are not mixed more than 30 minutes prior to application. Mixing more than 30 minutes prior to application will damage the seed. Otherwise, the seed shall be applied in a separate application prior to fertilizing and mulching. Lime should be applied separately form the seed and mulch.

Wood Cellulose fiber may be applied with seed and fertilizer West of the summit of the Cascade Mountain Range and only upon written request by the Contractor and approval of the Engineer East of the summit of the Cascade Mountain Range. Consult with the Regional Landscape Architect, the Olympia Service Center (OSC) Regional Liaison Landscape Architect, or the OSC Horticulturist.

Mulch must be uniformly applied to the seeded areas within 48 hours after seeding. Straw mulch is to be applied with a forced air spreader. Straw mulch may not be practical in windy areas. Wood cellulose fiber is normally applied with hydraulic equipment. Checks are also necessary to determine that the mulch is applied uniformly and at the required rate. In areas which cannot be reached by a mulch spreader, hand methods resulting in uniform application may be used.

In some areas, it may be desirable to anchor the mulch with an application of tackifier. The *Standard Specifications* are quite complete in the method of applying tackifiers see Sections 8-01.3(6)A and 9-14.4(7). The rate of application is varied from area to area to obtain the best results. Check with the Regional Landscape Architect, the OSC Regional Liaison Landscape Architect, or the OSC Horticulturist for advice on the proper application rate.

In order to control the possible erosion resulting from fast runoff on steep slopes, jute matting or excelsior matting is often used (see Section 710, *Roadside Manual*, M 25-30). It also has its use on flatter slopes where erodible soils are encountered. The purpose for using matting is to provide a quick temporary protection until the grass has grown enough to be permanent protection for the soil, but the matting cannot be expected to cope with water other than rainfall that falls on the exposed slope. Drainage from above or beyond the raw slope should be controlled by ditching or drains. The Inspector is charged with being alert to this potential problem and making every effort to ensure that this kind of runoff is diverted away from the slope.

8-1.3 Measurement and Payment

Measurement and payment instructions are covered in Section 8-01.4 and 8-01.5 of the *Standard Specifications*. In some cases, a separate bid item will be established for extra fertilizing to permit additional applications on a seeded area during the life of the contract. In these cases, payment for the acreage fertilized will be made for each application.

8-2 Roadside Planting

8-2.1 General

Inspection of all roadside plantings should be performed by trained and experienced personnel. Recognizing that this is not always possible, this section is written to serve as a guide for project personnel. It is not intended as a substitute for professional assistance. Project personnel will find the *Roadside Manual*, M 25-30, and in particular Sections 700, 710, 720, 800, and 820 useful. When questions of adequacy of planting stock and procedures are encountered, or when differences of opinion concerning the acceptance or rejection of plants occur and the answers are not readily found in this section, the Inspector should request the assistance of the Regional Landscape Architect, the OSC Regional Liaison Landscape Architect, or the OSC Horticulturist. In cases where insect damage and diseases are suspected, the services of an entomologist or plant pathologist may be required. In the cases where existing trees or plants are damaged, the services of a International Society of Aboriculturists (ISA) certified arborist may be in order.

The highway right of way is largely a construction disturbed environment, lacking in natural soil profiles and subject to unusual runoff, abnormal air turbulence, pollutants, temperature variations, and other extremes. In this environment, the designer is faced with providing appropriate highway vegetation.

Plants are living things in contrast to concrete, steel, and stone, which are inanimate materials. Plants change in shape, size, color, and texture from season to season and from year to year, while inanimate materials remain constant except for slight changes in color and texture due to weathering or wear.

Functional plantings serve to improve traffic guidance, reduce headlight glare, provide safety features, reduce pollution, prevent erosion, provide screening, minimize impacts to streams, and contribute to improved aesthetics. Plantings can also be used to create a smooth transition from rigid geometric cross-section and structural forms to nearby natural vegetation and land forms. They also provide gateways to communities.

Plants are also used in soil bioengineering. This practice is being used more frequently in WSDOT projects. Soil bioengineering is used to stabilize and revegetate slopes and stream banks and is often used in conjunction with traditional "hard" geotechnical fixes. For more information on the uses of soil bioengineering, see Chapter 1350 of the *Design Manual* and Chapter 740 of the *Roadside Manual*.

The survival of plantings under the conditions imposed by the construction process and the environmental conditions of the site should always be a concern of the Project Office. The best conceived and designed planting may not produce the desired results if the quality of plants and the planting procedures fail to meet the requirements of the contract specifications.

Before commencing any work on the project, there should be a meeting with the Project Engineer, the inspectors, and the Landscape Architect. The agenda for the meeting scheduled by the Project Engineer should include but not be limited to the following:

- The basic concept of what is to be achieved with each individual area and the project as a whole. (Revegetation, open forest, screening, soil bioengineering, focal attention, and all other aspects to be discussed must be understood if the ultimate concept of design is to be accomplished.)
- Discuss construction issues such as mixing of soil amendments into the soil and compaction requirements. Compaction efforts for roadside plantings are different than the compaction effort required for road and bridge foundations. The ideal soil for plant grow is a loose soil with the right balance of organic matter, microorganisms, and minerals. In contrast, roadway construction requires highly compacted soils with low organic matter content for stability. These differences result in different compaction requirements. For example, soils for road foundations are compacted to 95 percent density, where as soils for plant establishment typically require a density less than 80 percent.
- The growing characteristics, weaknesses, and strong points of each plant should be discussed especially as they relate to the environment over which the Inspector has some control (drainage, exposure, etc.). Modifications of the plans should be discussed with the Regional Landscape Architect or the OSC Regional Liaison Landscape Architect. The list of plants should be reviewed to ensure that only plant varieties that will grow in the area have been listed. Typically, only native plant varieties should be used.
- Discuss possible maintenance problems with the maintenance personnel. Modifications that were unexpected during the design stage may need to be implemented. At the initial layout stage, the maintenance personnel may be better qualified to discuss the project. Any modifications to the plans should be coordinated with the Landscape Architect to ensure the functions are maintained.
- Discuss ongoing coordination between Project Engineer, Inspectors, and Landscape Architects to assist in the successful completion of the Project.

8-2.2 Landscape Terminology

Acid Soil/Alkaline Soil

The pH is a measure of hydrogen ions in the soil. Various plants respond differently to pH variations. Generally, the soil west of the Cascades is acidic, while east of the Cascades is more basic. The pH scale ranges from 0 to 14. A pH of measurement of 7 indicates a neutral soil. A pH measurement below 7 indicates an acidic soil. A pH measurement above 7 indicates an alkaline soil or basic soil. Generally, plants are selected for a particular area without a need to change the pH of the soil. When a pH change is desired, a soil test is taken, analyzed, and the pH is changed appropriately upon recommendations from Regional Landscape Architect or the OSC Horticulturist.

Balled and Burlapped (B&B)

Plants are prepared for transplanting by digging them so that the soil immediately around the roots remains undisturbed. The ball of earth and root is then bound in burlap or similar mesh fabrics. An acceptable B&B root ball should contain 90 percent (visual estimate of volume) of the earth material held together with root system when removed from the burlap.

Bare Root (BR)

Most deciduous plants are dug when dormant. The roots are cleaned, pruned, and usually stored in moist material. Roots must remain moist and not allowed to dry out.

Botanical Name

The botanical name is the plant name, written in Latin, that is used universally. The common name is the name used in a local area, and is not necessarily the same name used in other areas. The correct botanical name is usually found in "Standardized Plant Names", available from the Landscape Architect. The botanical name usually consists of two names, Genus and Species, but may include additional names.

Genus:	1st word
Species:	2nd word
Variety:	3rd word (if appropriate)
Example:	Sambucus racemosa melanocarpa
Genus:	Sambucus
Species:	racemosa
Variety:	melanocarpa

Branch

An offshoot from a trunk or main stem. It could be also called a bough or a portion of a main stem.

Caliper

The diameter of the trunk of a deciduous tree is measured 6 inches (150 millimeters) above ground level, up to 4-inch (100-millimeter) caliper size. If greater caliper than 4 inches (100 millimeters), it is measured at 12 inches (300 millimeters) above ground level.

Cane

A primary stem which starts from the ground of a shrub or at a point not higher than 1/4 the height of the plant. A cane generally only refers to growth on particular plant material, such as roses, etc.

Clumps

Plants with at least double the number of canes required for standard material; trees with three or more main stems starting from the ground. Vine maples are sometimes sold by the clump.

Collected Material

Trees, shrubs, or other plant material collected from native stands, including Christmas tree stock and plants from native stands or forest plantings. After one growing season at the nursery, they are no longer considered collected material.

Compost

Stable, mature, decomposed organic solid waste that is the result of the accelerated aerobic biodegradation and stabilization under controlled conditions. The result has a uniform, dark, soil like appearance.

Container Grown

Plants grown and delivered to the job site in cans or other containers. Container grown plant material can be planted any time of the year and should not be allowed to dry out while in the container. Usually, plants grown in containers are in a very free draining soil mixture made up of nutrient free components. Container grown plants have a tendency to dry out and decline in vigor when not under the care of the nursery. Container grown material should have a firm root ball which will hold 90 percent (visual estimate of volume) of the ball material when removed from the container. Good container grown materials will hold virtually all of the soil in the root zone when a good growing medium is used. Some root growth should be visible in the outer edges of the ball. Excessive roots at the bottom of the ball indicate lack of proper root pruning at the time of canning. Excessive roots at the side or bottom of the container could indicate a root bound condition.

Cuttings

Cuttings are detached leaf buds or portions of branches which under favorable circumstances are capable of producing roots when placed in a growing medium. Common species used as cuttings are willow, cottonwood, and red osier dogwood.

Fertilizer

Any natural or artificial material added to the soil or directly to the leaves to supply one or more of the plant nutrients. Generally, a complete fertilizer refers to a fertilizer that contains nitrogen, phosphorous, and potassium (NPK). Indications on a container are usually numerical 10-8-6 or 20-10-5, etc. These numbers indicate the percentage of actual nutrient element available, i.e., 10 percent nitrogen, 8 percent phosphorous, and 6 percent potassium (10-8-6). Other minor nutrients are sometimes added to NPK such as magnesium, manganese, boron, iron, zinc, calcium, sulfur, etc.

The nitrogen in a fertilizer can be readily available or slow release (controlled availability) depending upon how water soluble it is. The slow release nitrogen (high percentage of water insoluble nitrogen) will allow the nitrogen to be available to plants over a long period of time. The readily available 100 percent water soluble fertilizer can leach away with heavy rains or damage the plant by the high concentrations of nutrient. Additional nitrogen and other elements are often necessary for plant growth when mulches are used. The decaying activity of the mulch ties up the plant nutrients and is thus unavailable for plant growth.

Applying the wrong type of fertilizer can harm or kill plants. Consult with Regional Landscape Architect, OSC Regional Liaison Landscape Architect, OSC Roadside and Site Development Manager (Design Office), or OSC Horticulturist before applying fertilizers not specified in contract. In addition, approval by the OSC Construction Office may be required and approval by the Project Engineer and Regional Construction/Operations Engineer's Office is required (see the Change Order Check list).

Heeling In

A method of temporary storage by covering plant roots with moist sawdust, mulch, or a mixture of other materials capable of good moisture retention, to keep the roots from drying out.

Method for Heeling in Plants

Herbicide

A herbicide is a pesticide chemically formulated to control or destroy weeds. Herbicides are broken down into main groups: Postemergence Herbicide and Preemergence Herbicide. Postemergence herbicide is a plant killing material that acts on the active growing surface of a plant after the plant has emerged from the soil. It is usually most effective during the rapid growth of the plant. Preemergence herbicide is a plant killing herbicide which acts to prevent the seeds, bulbs, tubers, stolens, etc., from sprouting (before-emergence).

Inoculated Seed

Seeds of the legume family (i.e., clover) that have been treated with nitrogen-fixing bacteria to enable them to make use of nitrogen from the soil atmosphere.

Mulch

Mulch is any loose material placed over soil, usually to retain moisture, reduce or prevent weed growth, insulate soil, or improve the general appearance of the plant bed. Additional fertilizer is sometimes necessary in order to offset the loss of plant nutrients used by the micro-organisms that break down the mulch, especially when using non-native stock.

Mycorrhiza

A beneficial group of fibrous fungi that engulf soil particles and pore spaces to absorb water and nutrients in solution and transfer this solution to the roots of plants. In effect, they multiply the plants' root systems many times.

Pesticide

A pesticide is any substance or mixture of substances intended to control insects, rodents, fungi, weeds, or other forms of plants or animal life that are considered to be pests.

Puddling

Puddling is a process used to settle the soil with water by eliminating air pockets during the planting process.

Root Ball

Ball of earth encompassing the roots of a plant. Generally, the root ball will have a good portion made up of root networks. A "manufactured-root ball" is one where the root system is not adequate to hold the soil in place. Manufactured root balls should not be accepted, since the root system is not developed sufficiently.

Rootbound (Pot Bound)

The condition of a potted or container plant whose roots have become densely matted and most often encircle the outer edges of the container. Generally, this condition is a result of holding the plant in the container for too long a period. Root bound plants should be rejected. See Section 9-14.6(2) of the *Standard Specifications*.

Root Collar (Plant Crown)

Root Collar is the line of junction between the root of the plant and its stem, also known as the plant crown.

Runner

A long, slender, trailing stem that puts out roots along the ground. Where the nodes make contact with the ground, a new plant is produced. (For example: Kinnikinnick or wild strawberry.)

Soil Bioengineering

Soil bioengineering combines the use of live plants or cuttings, dead plant material, and inert structural members to produce living, functioning land stabilization systems.

Soil Mixture

A mixture of growing medium such as sand, sawdust, perlite, vermiculite, peat and bark dust which is used to grow plant materials. The soil mixture usually contains two or more items and may be combined with the native top soil.

WSNLA

Washington State Nursery and Landscape Association.

8-2.3 Reference Reading

It is recommended that each office administering roadside planting, sit-in-parks, view point development, and rest area contracts, obtain and maintain a library of books and reference materials listed under Additional Sources of Information in Section 800 of the *Roadside Manual*, M 25-30, before the Contractor commences work. Most of what follows is taken from *Inspection Guide for Landscape Planting* published by AASHTO.

8-2.4 Inspection of Planting Stock

A. Inspection at the Nursery

Whenever possible, an inspection of planting stock should be made at the nursery or other approved source to ensure that quality planting stock will be provided. The Regional Landscape Architect, or the OSC Regional Liaison Landscape Architect, and/or the OSC Horticulturist should be requested to attend or participate.

The size and quality of planting stock cannot be rigidly standardized because of varying growing conditions. Judgment should be exercised and allowances made for reasonable variation in growth and appearance.

All planting stock should be of the genus, species, variety, and sizes specified and shall conform to the contract specifications for the particular species, or variety, regarding straightness of trunk, branching structure, proportion, and size of material.

Individual plants should be measured to determine conformance with contract specifications. If a particular detail of measurement has not been specified, the current edition of “American Standard for Nursery Stock, Z60.1” should be used.

Inspection at the nursery or other source of supply should include the following checks:

1. Check the general condition of the plant in the block from which the stock is to be taken for:

   a. Uniformity of Leaf Coloration: Plants which exhibit yellowing or other discoloration could indicate poor drainage, fertilizer deficiency, herbicide damage, insect damage, or disease, and may not meet specifications.

   b. Bud Development: During dormant periods of the growth cycle, plants should have buds that are firm, moist, and uniformly spaced. A slight cut into the bark may be made to determine that the cambium or growing layer just beneath the bark is moist and green.

   c. Uniformity of Growth: The plants in any given block should exhibit uniform vigor and health. Plants with less growth and which are less vigorous than the majority of the plants in the block may not be acceptable.

   d. Spacing of Plants in the Row: Vigorously growing, well-rounded, fully developed plants will transplant well. Quality nursery stock should be grown with sufficient spacing to permit good development of the individual plant. Plants spaced too closely may be extremely high headed.

   e. Soil: Plants to be balled must be grown from soil which will hold a firm ball. Broken or loose balls are a cause for rejection because of possible damage to the hair roots, a very important part of the plant’s feeding system.

   f. Presence of Weeds: An overgrown, weed-infested nursery block indicates lack of care and the plants growing in it may be in a poor state of vigor because of the weed competition. Weeds should not be growing in containers.

2. Check individual plants for freedom of defects such as:

a. Decay: On trees, look for spots of decayed tissue on the trunk and branches.

b. Sunscald or Sunburn: The destruction of tissue caused by the sun rays striking a plant on the south or southwest side. This may result in the death of cambium tissue and bark, exposing the plant to secondary insect and/or disease infestation.

c. Abrasions of the Bark: Abrasions severe enough to damage the cambium tissue may be sufficient for rejection.

d. Girdling Roots: Roots that grow around another root or a stem, thus tending to strangle the plant.

e. Improper Pruning: Stubs resulting from improper pruning, which have died back, are an excellent point of entry for disease organisms. All cuts should be flush with the trunk or supporting branch. When a cut is made to encourage branching, it should be made back to a bud.

f. Frost Cracks: Long vertical splits in the bark and/or wood may occur on the south and southwest sides of young and thin-barked trees. Such cracks may become invaded by canker or decay-producing fungi and bacteria.

g. Signs of Injury: Dead leaves, dry buds; dieback of twigs and branches; blackened sapwood and sunden, discolored patches of bark (sunscald) on the trunk or limbs.

3. Check individual plants for freedom from plant diseases and pests such as:

a. Diseases: These will appear in a variety of forms such as abnormal growth of leaves, twigs, fruits, discoloration of leaves and bark, unusual discharges of sap through the bark, etc. Any plant showing evidence of disease should be rejected.

b. Insects: Look for insect eggs, spider webs, or evidence of damage from insect feeding on leaves, twigs, buds, or other plant parts. Examine the trunks of trees for borer holes which appear as tunnels drilled into the bark and inward into the wood of the trunk. Trees with evidence of borers or other insect damage should be rejected.

4. Check individual plants for proper habit of growth as follows:

a. If a particular habit, i.e., single stem, multiple stem, etc., has been specified, be sure to obtain plants that conform to this requirement.

b. If no particular growth habit has been specified, then the current “American Standard for Nursery Stock, Z60.1” as published by the American Association of Nurserymen should be used as a guide.

c. Shade and flowering trees should have top growth symmetrically balanced. Shade trees should have a single leader. The branching should be well developed and characteristic of the species.

d. Evergreen trees should be full foliaged plants with uniform density. Sheared plants, such as Douglas Fir sheared for Christmas trees, should be avoided unless specified.

e. Shrubs should be well branched in a manner characteristic of the species. The current “American Standard for Nursery Stock, Z60.1”, is an excellent guide for determining the proper number of branches for certain size shrubs.

5. Check all container grown plants to determine that they meet the requirements outlined in 1 through 4, above. In addition, a random sampling of plants should be removed from their containers to determine that the root system is healthy. Plants which are found to be pot bound and plants which have insufficiently developed root systems to hold the soil together when removed from the container should be rejected. Healthy roots should be able to hold the soil mass together yet not be crowded around the outside perimeter of the container.

6. Planting stock which is based on the above criteria may be tagged with seals placed on all plants or representative samples at the nursery. This will assist in future inspection of these plants when delivered on the job site. Seals placed on planting stock for later identification do not imply acceptance on the construction site.

B. Inspection at the Construction Site

Inspection of stock at the construction site is to ensure that the plants are from an approved source, are in a healthy and undamaged condition, and conform to sizes, quantities, and standards called for in the specifications. Plant samples lots should be established and a representative number of plants should be inspected per Section 9-4.44 of this manual.

This inspection should consider the condition of the plant and the use of proper handling procedures from the time of digging to delivery at the construction site. If there are questions about the following check list, consult with the OSC Horticulturist for calcification.

Inspection at the construction site should include the following checks:

- Each shipment of plants should be free of disease and insect pests, and meet all applicable State and Federal certification requirements. All necessary quarantine or State nursery inspection certificates should accompany each shipment.
- All trees and a representative sample of shrubs should be legibly tagged with the correct botanical name, common name, and size to agree with the specifications and plant list. Bare-root plants should be shipped in bundles with each bundle properly tagged.
- Planting stock which has not been inspected at the source should be inspected as appropriate, in accordance with items 1 through 6, "Inspection at the Nursery". This should be done as the material is being unloaded, or immediately thereafter, so that plants which are unacceptable can be set aside for removal from the project side.
- Where root formation is irregular, measurement of the spread of bare-root plants should be the average, considering all sides of the plant, rather than the maximum root spread. The Inspector may allow moderate deviations (± 10 percent) from exact measurements in the case of plants which normally have irregular root systems. Example: Vine Maple.
- Large root stubs on nursery grown balled or bare-root stock should be considered evidence of lack of proper care and root pruning, and sufficient grounds for rejection of such plants. Root stubs frequently characterize "collected" stock and precautions should be taken to ensure that root systems are adequate.
- Damage to plant material caused by improper operation of mechanical diggers may be sufficient cause for rejection at the construction site. Plants dug with equipment leaving a cone-shaped ball should be carefully checked to make sure that an excessive portion of the root system has not been cut away. Feeder roots are the newly formed roots, usually white in color.
- Bare-rooted plants should have adequate live, damp, fibrous roots, free of rot and mold. Earth balls should be unbroken and of specified size.
- Precautions should be taken to prevent the drying of root systems in all shipments of plants to ensure arrival in good condition. During transport, plants must have been protected by a covering such as canvas or plastic sheeting. Bare-root plants should have been protected by moist burlap, sawdust, plastic, etc. Under no conditions should the roots system have been allowed to dry out. All plants must exhibit normal thrift and vigor.

Following completion of inspection, all plants accepted should be carefully stored as required until planted.

C. Storage of Plants

Plants not planted on the day of arrival at the site should be placed "in storage" and handled as follows:

- Outside storage should be shaded and protected from the wind.
- Plants stored on the project should be heeled-in to protect them from drying out at all times by covering the bare root or balls with moist sawdust, wood chips, shredded bark, peat moss, or other approved mulching material. Plants, including those in containers, should be kept in a moist condition until planted by using a fine mist spray or soaker hose, instead of a heavy stream which may cause damage.

8-2.5 Layout

The layout of landscape features should clearly show where exact dimensions are required and where some variances will be permitted. Accurate location of all buildings, roads, walks, paved areas, and features such as sculptures, walls, pools, etc., must be accomplished. Landscape beds, trees, and indigenous features must be laid out to mold the Landscape Architect's patterns to the existing topography and available area. Some variances are generally allowed in the bed areas and tree locations of the proposed plan to fit the particular situation, however, coordination with the various other plans and with the Landscape Architect is advised.

The layout of planting areas in wetlands is critically important to its success. Many plants have exact water requirements and will not thrive or even survive if planted in water too deep or too shallow. Changed conditions happen frequently during the grading phase. Every effort should be made to assure the hydrology of the wetland is as the designer intended before planting. Close coordination with the designer during the grading and plant layout phases can identify potential problems and fix them before they become costly mistakes.

Trees must be adjusted for minimum clearance to roadways and allowances must be made for mowing (especially when the tree is fully grown). One must ensure that placement of trees is not over existing utilities or drains or that tall growing trees are not placed under overhead utility lines. Shrubs and ground cover beds are often intended for unmowable areas. The outline must be adjusted to fulfill the intent and the edge should create a "flowing" outline that is aesthetically pleasing and mowable. It is important that sufficient stakes are used to clearly outline the planting areas.

Inspection During Planting

The Inspector should determine that planting operations at the construction site are properly completed in conformance with contract plans and specifications and good horticultural practices.

Planting stock on hand and ready for planting at the construction site should have been inspected upon delivery, in accordance with the checklist under "Inspection at the Construction Site".

A. Preliminary Preparation

- The Inspector and Contractor should jointly review and become familiar with all plan sheets, quantities, details, specifications, and other provisions of the contract. At this time, questions or interpretations can be answered or problems resolved through discussion with the Landscape Architect, the OSC Horticulturist, or other authorized persons.
- All materials that have specification requirements shall have an approval of source prior to incorporation or use on the project. Additionally, samples of these materials will be required to verify that the specifications are being adhered to. See Chapter 9 for further instructions and Chapter 8-2.6 for examples.
- The Inspector should check and approve the stakeout of all planting areas and planting hole locations prior to excavation. Minor relocation of planting areas and holes can be done at this time to avoid utility lines, rock outcrops, drainage ditches, or impervious or wet soil conditions. If minor relocation of plantings are not possible, the Inspector should contact the Landscape Architect to adjust the design requirements.

B. Site Preparation

Prior to installation of plant materials at the construction site, the following preparation should be completed according to the requirements of the contract plans and specifications.

- Control weeds around planting holes or entire bed areas as called for by the contract specifications. The Inspector should check to be sure that weed root systems have been killed. The interior color of dead or dying roots is usually tan or brown, whereas healthy roots are usually white. If the weed's root systems are alive, planting should be delayed until they can be killed. Perennial weeds with extensive root systems such as Canada thistle, Horsetail, Wild pea, Field bindweed, and Quack grass (see Common Weeds of the United States - United States Department of Agriculture) should not be controlled by hand weeding; they should be controlled with herbicides by a licensed applicator.
- Excavation of planting holes, pockets, or beds to the required size and depth and spaced as shown on plans.
- Preparation and stockpiling of backfill mixture as called for by contract specifications.
- The planting holes are to be excavated minimally to the sizes indicated on the contract plans. In mixed planting areas, usually trees are planted first followed by the larger shrubs, low shrubs and finally planted with ground cover plants. The holes for trees and large shrubs may be dug well ahead of time, provided that the holes are backfilled with an approved soil or soil mix within a day or two after digging. Where drains are needed, they are not to be dug or backfilled until planting time. This provides good inspection to aid in determining if a drain is actually warranted. Before backfilling, especially in drilled holes, the sides and bottoms must be scratched and loosened to break all "glazing". This promotes moisture transfer between different soils (existing and backfill).

C. Interim Care of Planting Stock

Care must be taken to avoid damaging plants being moved from the storage area to the planting site. Balled and Burlapped (B&B) plants should be protected against drying and handled carefully to avoid cracking or breaking the earth ball. Plants should not be handled by the trunk or stems. Bare-root plants should be "puddled" when removed from the heeling-in bed to protect the roots from drying. Plants should be protected against freezing or drying by a covering of burlap, tarpaulin, or mulching material during transportation from the heeling-in bed to the planting site. Should damage occur, or be found at this time, the plants should be rejected and removed from the site.

At the time of planting, the Inspector should be alert for any damaged balls, leaders, major branches, or roots. Pruning should be permitted to remove minor damaged branches which will not affect the characteristic shape of the plant (see *Western Garden Book* - Pruning Techniques). All rejected plants should be replaced during the current planting season.

In order to ensure against reuse of discarded plants, seals should be removed at the trunk or stems above the root crowns should be marked with a small spot of paint or dye. Since discarded plants are the property of the Contractor, they should not be marked or mistreated in such a way as to make them unfit for other uses.

D. Planting Operation

Unless in conflict with the contract specifications, the following check list of horticultural practices may be used by the Inspector.

- Plantings should be performed only during the specified planting season.
- The Inspector should check for proper positioning of the plants and the spread of the bare root system in the planting hole. When laying out shrub and ground cover beds, it is essential that the perimeter be defined by placing plants in a flowing line that clearly outlines the bed border. The interior should then be staked in accordance with the plant pattern and spacing. After B&B plants are set, burlap and any twine should be loosened, laid back, and cut away without damaging the ball. During the planting operation, the burlap should have been pulled back from the base of the plant and cut away. If the burlap is allowed to remain above the ground, it will generally act as a wick and thus the plant will be surrounded by a dry barrier which the roots cannot penetrate. The twine should be cut and, if degradable, must be buried or it will girdle the plant and the death of the plant will result. If non-biodegradable materials have been used, they should be removed entirely.
- When planting Bare Root or Potted Ground Covers: If the soil is dry, irrigate the planting bed the day before planting. If irrigation is not available, delay the planting until the soil is moist. The flats may be tilted up and the ends jarred against the ground to shift the soil and plants toward the lower end. Flats must be watered the day before planting. Block or cut out the plants and remove from the flat, retaining as much soil as possible. The hole must be large enough to take the root system without forcing or distorting.
- Check for correct depth of the root collar. Tree root collars should be above ground. All plants should not be planted deeper than they were growing in the nursery.
- Place approved backfill material around plant roots or plant balls, being careful not to damage the ball or the fine root system of bare-rooted plants. Backfill which is frozen or wet should not be used.
- Eliminate air pockets in the backfill by filling, tamping, and watering as required by the specifications. It is generally advisable to water the plants thoroughly before the backfilling of the pit is completed. Container plants should be moist at the time of planting.
- When the above operations have been completed, unless otherwise specified, a berm of soil should be placed around the perimeter of the pit to form a basin or saucer to facilitate watering and retention of rain or irrigation water. When plating on slopes, the berm should be on the downhill side only. This allows the plant to catch runoff from up slope.
- Plants should be mulched to the specified depth with approved mulch material. Tree root collars should be above the mulch. The use of mulches about plants prevents rapid temperature fluctuation, reduces moisture loss, and aids in weed control. Care should be given to the mulching of ground covers, so as not to bury these plants with mulch.
- Sometimes it is found that excessive moisture will necessitate drastic curtailment or elimination of planting in an area, or a different plant may be required. Consult with the Landscape Architect or the OSC Horticulturist when excessive moisture is encountered. Mounding may be considered when it is necessary to raise the bed above the water table. It is lack of oxygen around the roots of plants that usually kills the plant

E. Wrapping, Staking, and Pruning

All plants should be wrapped, and staked if specified.

- Stakes should be driven solidly into the ground and guying installed to prevent excessive movement of the plant until the roots system is firmly established in the new planting location. Guys shall be loose enough to allow approximately 6 inches (150 mm) of movement. This movement stimulates the roots and trunk to grow and increases stability.
- Trunks or stems of plants should be wrapped from the root collar or plant crown to the lower limbs with approved material to protect against drying or other physical damage.
- All broken, torn, or damaged roots should be pruned, leaving a clean cut surface to help prevent rot and disease.
- Trees normally should not be pruned except for broken branches, unless otherwise specified or directed.

Watering

The planting operation is completed by watering all plants as specified. Weather and soil conditions dictate the need for watering. Over-watering is as harmful as under-watering.

8-2.6 Materials

Materials on landscaping projects include many items besides plant material, such as planting media, pesticides, fertilizer, mulch, staking and guying material, irrigation/ electrical material (pipe, pumps, sprinklers, backflow control devices, valves, etc.) drainage, surfacing, and more. Chapter 9 of this manual, covers the inspection and testing of the more common highway construction materials encountered.

Plant Material

Sampling of plant materials must be done with judgment and selectivity. Look the entire lot over, carefully, noting the general size differential, and coloring, the sturdiness, the shapes, needle dropping on evergreens, condition of bare root, bare root drying, density of bare root hair and fibrous root system, firmness of the ball for B&B, general size of balls, wrapping method, evidence of handling methods, and all items of emphasis pointed out in the plans and specifications.

Bare root plants must be dormant when gathered and prepared for shipping. This can normally be ascertained in distant areas by calling on the services of the agricultural extension agent in the vicinity of the nursery. If trees are not generally dormant, an on site inspection must be made as nurseries may be able to satisfactorily induce dormancy by cold spraying or other means. The normal test for dormancy is observation; if the plant has been subjected to cooling environment and the majority of the leaves have fallen naturally it is a good indication of dormancy. Expert advice from the OSC Horticulturist should be obtained in all other cases.

The *Construction Manual*, Section 9-4.44, requires the Contractor to submit a sample of each plant specified, except trees. Photographs shall be submitted for trees. These photographs are to clearly show enough detail for positive identification of the variety and form of the plant materials. The purpose for these samples is to identify all of the plants to verify that they are the plants intended by the Landscape Architect. A plant name may be identified with different plants in other parts of the country. Once the identities of these plants by botanical name are approved, they should be properly cared for at the field office so the project staff may study and learn to recognize them through association.

Planting Media

Various additives are used to improve the root growing environment of that soil that exists on the site (such items as perlite, vermiculite, sand, gravel, compost, sawdust, peat, etc.). The additives may be either used singularly or in combination with the existing soil. The planting (growing) media material should be checked against the specification.

Pesticides

Pesticides should be applied, by a licensed applicator. The label should be checked for the proper material and timing of application. The pesticide label will give instructions such as intended use of the product, directions for use, and warnings. The label also indicates if the material is registered for use on a particular type of plant material. Pesticide Application Record (WSDOT Form 540-509) shall be completed daily by the Licensed Applicator with a copy to the Project Engineer daily. The Project Engineer shall distribute a copy of this record daily to the Regional Operations or Maintenance Engineer and to the Roadside Maintenance Section at the Field Operations Support Service Center in Olympia.

Fertilizers

Fertilizers should be applied in accordance with the specifications. The formula should be cross checked with the specifications and the label on the bag or container. When water soluble nitrogen fertilizers are used, particularly in lawn areas, adequate moisture is needed to prevent fertilizer burning.

Irrigation Materials

Irrigation materials include such items as piping, backflow control devices, valves, backfill material, electrical, sprinkler heads, etc. They are normally approved by the Field Operations Support Service Center (FOSSC) Materials Laboratory. These items should be cross-checked with the specifications and/or the Landscape Architect to ensure products are satisfactory and are being installed correctly.

Drainage

Drainage materials include gravel backfill, culvert piping, French drains, etc. These drainage items should all be checked as to functionality and compliance with the *Standard Specifications*.

Surfacing

Surfacing may take the form of gravel, asphalt, cobblestones, concrete, brick, wood, combinations of different materials, etc. The use expected, effect desired, and budget allowed determines the material selected. The surfacing materials should be checked in accordance with the specifications.

8-2.7 Progress Schedule

The Contractor's progress schedule should show the order in which the Contractor proposes to perform the work within the contract time. It should show the beginning and completion times for the several prominent features of the work provided in the contract. If specified by the contract, such schedule will be in the form of bar graphs developed under the critical path method, PERT, or other methods. Upon request of the Project Engineer, the Contractor will submit supplementary progress schedules in the form required by the Project Engineer. In the case of material to be grown, it shall, in detail, specify planting and propagation times. Times in or out of greenhouses and times shown for activities related to dormant or seasonal requirements will be anticipated times to be adjusted to actual times for the year involved when they become known. The "energizing" time for electricity and water must be checked with the servicing utility for feasibility and scheduling.

The schedule must contain the weed control plan before starting work on the project, the anticipated planting per day, and areas to be worked concurrently. The underground irrigation, electrical, or other work within the planting areas must be completed and working before planting.

The correct timing for herbicides, fertilizing, mulching, pruning and all other phases must be specified in relationship of one event to another.

8-2.8 Inspection During the Plant Establishment Period

The completion of planting in any given area may proceed the start of plant establishment by considerable time. When plant establishment is started, the area should be inspected to make sure that all plants are in place and healthy. Additional inspections of the planting areas should take place on or near the first of each month during the Plant Establishment Period to spot any potential problems that the Contractor needs to attend to.

Although planting stock has been properly selected, delivered to the planting site in a vigorous, thrifty condition, and planted in accordance with good horticultural practices, survival and normal growth depend to a large degree upon appropriate care during the establishment period.

If differences of opinion concerning the need for a particular procedure occur, and the answers are not readily found in this guide, the Inspector should seek the counsel of a the OSC Horticulturist or landscape architect.

Ideally, the establishment period should encompass the time required by the plantings to become acclimated to the growing conditions at the planting site. The project specifications should clearly indicate the length of the establishment period, which may vary from one area of the State to another, depending on the local conditions, climate, and the type of plant materials utilized.

A well rounded program of horticultural practices used during the establishment period may include watering, fertilizing, pruning, insect, disease, and weed control, and replacement of unsatisfactory plants in accordance with the specifications.

A. Inspection Check List

The following inspection check list includes critical items which should be observed periodically during establishment.

- Plants must be kept in proper position as appropriate for the species. Plants may require repositioning as a result of settlement, wind action, vandalism, etc. Care should be exercised in straightening to minimize disturbance to the root mass and should include replacing topsoil as required.
- Stakes should be firmly imbedded, redriving may be necessary.
- Guy wires may need to be adjusted to keep the tree straight.
- Protective wrapping on trunks or stems should be secure.
- Vehicular, fire, or damage due to vandalism should be noted and corrective action taken.
- Note damage caused by animals (i.e., deer, rodents) and seek advice on control measures.
- Report infestations of insects and disease to the OSC Horticulturist or other appropriate professional for corrective action.
- Inspect for broken branches or sucker growth and have them removed by pruning.
- Where discoloration of foliage occurs, especially in evergreen material, advice on corrective measures should be sought.
- Dead and severely damaged plants should be removed immediately and replaced during the next appropriate planting period.
- Inspect for settlement of soil or soil mix and replace to required grade, repositioning the plant if necessary.
- Check overall depth of mulch and add or replace as required.
- Inspect berms and water basins (constructed for the purpose of retaining water) to ensure that they are functioning properly. Repair and rebuild as necessary.
- See that project areas are weeded as specified.
- If natural rainfall during the establishment period is insufficient for normal plant growth, supplemental water should be supplied. The method of application and quantity of water used should be specified.
- If planting projects require the use of fertilizers, specifications should be followed.

B. Inspection at the End of the Plant Establishment Period

The inspection should include a plans-in-hand review of each planting area or bed to determine that the arrangement, number, and species of healthy plants called for on the planting plans are present.

Since this inspection is of major importance to the ultimate success of the project, a landscape architect and the OSC Horticulturist, as well as the Inspector and Contractor, should be members of the inspection team.

All plants rejected during the inspection should be removed and replaced by new plants which meet all of the requirements of the contract and the *Standard Specifications*.

The final acceptance of the project shall not be completed until all plant requirements have been satisfactorily made.

8-2.9 Measurement and Payment

Measurement and payment instructions are covered in Sections 8-02.4 and 8-02.5 of the *Standard Specifications*.

Payment for trees, shrubs and ground cover plants is to be made as specified in the contract. The Project Engineer shall make an inspection of the planting areas before payment is made, to determine if the required work has been accomplished and the number of plants are in a healthy condition. No payments shall be made for plants that are not in a healthy condition, although partial payment may have been made following a previous inspection.

8-3 Irrigation System

8-3.1 General

Irrigation has been defined as the artificial watering of land (as by canals, ditches, pipes, or flooding) to supply moisture for plant growth.

Frequently, irrigation systems are designed to produce optimum soil moisture levels, thereby encouraging maximum plant growth and/or maximum crop yield. The use of irrigation in WSDOT landscaping projects differs from this, however, since our primary concern is different from that of commercial growers.

The objective of WSDOT is to help ensure plant survival by supplementing natural precipitation during dry periods. This can often be accomplished with far less water than that required to obtain maximum growth and yields. Application rates of irrigation systems are, therefore, designed from the standpoint of minimum moisture requirements of the plants.

A properly designed and installed irrigation system will distribute water uniformly over the intended planting area at a predetermined precipitation rate. Many factors influence the efficiency of a system's operation and must be taken into consideration during the design stage. In addition, care must be taken when inspecting installation of the irrigation system to ensure that the system not only follows the designer's intent, but also fully conforms to the *Standard Specifications*, project plans and provisions, and the manufacturer's requirements and recommendations.

The most efficient and economical irrigation design is only as good as its installation, and this depends upon careful and thorough inspections.

8-3.2 Layout

Turf areas and planting beds shall be laid out prior to staking the irrigation system. If adjustments to the irrigation system are required, they must produce a system which will provide a uniform sprinkling pattern without leaving dry areas.

Sprinkler heads to be located adjacent to the perimeter of planting beds should be laid out first to approximate as closely as possible the designed or approved revised configuration of the planting area. The remainder of the planting area should then be filled with the spacing between heads not to exceed that which is shown on the plans or recommended by the manufacturer.

Review all layouts and measure the distance between adjacent heads to ensure that full coverage of water will be attained. If the pattern is not uniform in coverage, or if the distance between heads exceeds that recommended by the manufacturer, the layout will need to be adjusted.

Unless otherwise specified in the project provisions, all irrigation systems shall be completed, tested, approved, and properly backfilled before landscaping can begin.

Advise the Regional Landscape Architect when the irrigation system has been staked in the field.

8-3.3 Materials

All components intended for use in an irrigation system must receive approval from the Materials Engineer prior to their incorporation into the project.

Approval of items is determined from information supplied on the Request for Approval of Material (RAM), Form 350-071, and accompanying catalog cuts. Items selected off the *Qualified Products List* are already approved for use and do not require the submittal of a RAM. All components of the irrigation system shall be listed and identified by their corresponding bid item number where applicable. Sufficient information must be included to positively identify each item listed. Each item shall be identified by size, catalog number, and the name of the manufacturer.

Four copies of catalog cuts of all items listed shall accompany the RAM. Notification of approval or rejection of either the source or the components will be forwarded by the FOSSC Materials Laboratory to the Project Engineer. The Project Engineer will inform the Contractor of the approval action.

If samples are requested for preliminary evaluation, it will be the Contractor's responsibility to obtain and submit the designated items to the FOSSC Materials Lab for testing. Unless destructive testing is required, all items will be returned to the Contractor upon completion of testing, at which time approved items may be incorporated into the project.

8-3.4 Inspection

An efficient irrigation system is the result of, and depends upon, proper design, installation, and maintenance.

A properly installed system is one that not only follows and fulfills the designer's intent, but which, in addition, meets the requirements of the project plans and documents and has been installed according to the manufacturer's suggestions and recommendations.

Thorough inspections, carefully conducted during construction, are of utmost importance to help ensure proper installation. To be adequately prepared for inspecting the installation of irrigation systems, it is of great benefit for the Inspector to have previous knowledge, preferably some experience, in at least one of the various aspects of irrigation design, installation, and maintenance. This not always being possible, it becomes necessary for the Inspector to first familiarize themselves with those portions of the *Standard Specifications* and contract documents that pertain to inspection and irrigation systems before attempting the necessary inspections. In addition, since irrigation inspection requires such varied and versatile knowledge and experience, it is advisable for the Inspector to obtain additional advice and/or assistance from WSDOT personnel having the expertise in these specialty areas.

An inspection shall be conducted on all irrigation system components delivered to the project site to determine acceptance or rejection. If at any time, until the system is completed and turned over to WSDOT, components are found that are either damaged, defective, or not formally approved for use on the project, they shall be rejected. Information indicating acceptance or rejection of components shall be properly documented and maintained by the Inspector at all times.

8-3.5 Installation

Once the irrigation system layout has been staked and approved by the Project Engineer, the Contractor may commence excavation.

Trench bottoms shall be relatively smooth to provide support along the entire length of pipes to be installed. In addition, and as specified in Section 8-03.3(2) of the *Standard Specifications*, trench bottoms shall be of sand or other suitable material free from rocks, stones, or any material which might damage the pipe.

All system components shall be installed in accordance with the project plans and documents, using methods or techniques recommended by the respective component manufacturers.

Solvent welding is a technique used to bond PVC pipe and fittings together. The solvent cement used in this type of installation is, as its name implies, a solvent which dissolves those portions of the pipe and fittings surfaces to which it is applied, to form a continuous bond between the mating surfaces. During the construction of PVC solvent weld joints, excess cement is forced out by the insertion of the pipe into the fitting socket. This excess cement, if not immediately removed, will dissolve the surface of the pipe at its point of accumulation and will result in a permanently weakened spot. It is necessary, therefore, that this excess cement be wiped at the time the joint is made and that the Inspector check to ensure that it has been done.

Plastic pipe is subject to considerable expansion and contraction with temperature changes. To provide for this, pipe should be snaked from side-to-side in the trench.

Care shall be taken during the installation of the pipe to ensure that rock, dirt or other debris is not allowed to enter the open ends of the pipe.

Electrical control wire between the automatic controller and the automatic control valves, shall be bundled together at ten-foot intervals and snaked from side-to-side in the trench, either adjacent to or beneath the irrigation pipe. Snaking of the wire helps eliminate wire stressing or breakage caused by expansion or contraction of the earth due to variations in moisture content or extreme seasonal temperature fluctuations. Placement of the wires adjacent to or beneath the irrigation pipe is for protection against damage from possible future excavation.

Electrical splices shall be permitted only in valve boxes, junction boxes, pole bases, or at control equipment. No direct burial splices shall be allowed. Types of electrical splices allowed in WSDOT irrigation projects shall be only those approved for use by the FOSSC Materials Laboratory. Approved electrical splices are listed in the *Qualified Products List* or may be approved through the use of a RAM.

Freeze protection must be provided as specified in the project documents. Either a three-way valve with compressed air fitting for blowing water out of the lines, or drain valves placed at the low point of each lateral must be used. If the three-way valve and air fitting is to be used, it must comply with one of the designed installations approved for use by the Department of Social and Health Services. If drain valves are used, care must be taken to ensure that the lateral lines are properly sloped to provide complete drainage.

8-3.6 Cross-connection Control, Backflow Prevention

A cross-connection is any actual or potential connection between a potable water supply and a source of contamination or pollution.

A cross-connection is not in itself dangerous. It is only when contamination passes through it and into a potable water system that a health hazard is created.

Backflow is the unwanted reverse flow of liquids in piping system and is the major means by which contamination of potable water can occur. Backflow is the result of either back pressure or back-siphonage. Backflow from back pressure can occur any time pressure produced in the non-potable piping system is greater than that existing in the potable side. Backflow from back-siphonage is the result of a negative or subatmospheric pressure within a potable water system, causing contaminants from the non-potable side to be suctioned in.

Irrigation systems supplied by domestic potable water systems are potential pollutio hazards to the potable water. Such cross-connections require protection to prevent the possibility of backflow.

A backflow prevention, cross-connection control device is any device, method, or type of construction used to prevent backflow into a potable water system.

An approved backflow prevention, cross-connection control device is one that has been investigated and approved by an appropriate regulatory agency. The approving or regulatory agency for backflow prevention, cross-connection control devices for the state of Washington is the Department of Environmental Health. This agency periodically publishes a list of approved cross-connection control devices.

The local water purveyor determines the type of backflow prevention device to be used to protect domestic water supply systems under their jurisdiction. This determination is based upon the water purveyor's estimation of the probability of backflow occurring and the degree of hazard created if it should. Once the type of device to be used has been determined, the device shall be selected from the Department of Environmental Health current list of approved cross-connection control devices.

Installation of cross-connection control devices shall conform to the *Standard Specifications*, the project plans and documents, the manufacturer's recommendations, and the "Accepted Procedure and Practice in Cross-Connection Control Manual". In all cases, the backflow prevention device shall be tested by a certified inspector prior to activating the system. Additionally, Form 540-020, shall be filled out and the appropriate distribution made.

8-3.7 Serving Utility

The Project Engineer shall contact the serving utilities as soon as the Contractor's schedule is known, to arrange for the actual service connections, and to ensure that all agreements are completed and billing procedures are established.

8-3.8 As-Built Plans and System Orientation

The Project Engineer is required to submit As-Built Plans in accordance with Chapter 10-3.7 of this manual.

Accurate As-Built Plans are a valuable and necessary aid in designing and constructing future projects for the area, and for maintenance and repair of the irrigation system. Therefore, it is imperative that these As-Built Plans show the true location, size, and quantity of components installed.

Sections 1-05.3 and 8-03.3(10) of the *Standard Specifications* state that the Contractor is responsible for supplying working drawings, corrected shop drawings, schematic circuit diagrams or other drawings necessary for the Engineer to prepare corrected plans to show the work as constructed. To help ensure accuracy of this information requires that the Contractor or field representative record each change as it is completed. In addition, the Inspector shall inspect and verify this information prior to the commencement of backfilling. Upon completion of this, all working drawings and pertinent information shall be submitted for the Project Engineer's approval and use in preparing the As-Built Plans.

The Contractor is also required to conduct a training and orientation session for WSDOT personnel covering the operation, adjustment, and maintenance of the irrigation system. The Project Engineer shall arrange to have the maintenance personnel who will be involved with the irrigation system attend this orientation session. The As-Built Plans shall be available so they can be reviewed and all features explained. One copy of the As-Built Plans shall be presented to the maintenance personnel at that time, along with parts lists and service manuals for all equipment.

8-3.9 Measurement and Payment

Measurement and payment instructions are covered in Sections 8-03.4 and 8-03.5 of the *Standard Specifications*.

8-4 Curbs, Gutters, Spillways, and Inlets

8-4.1 General

The *Standard Specifications* specify the class of concrete to use when constructing the various items. Quite often the Contractor places the concrete for these miscellaneous items at the same time of placing concrete for other work. When this is the case, it is usually more convenient for the

Contractor to use the same class of concrete for all the work during the day. At the Contractor's request, the Project Engineer may accept a higher class of concrete in lieu of the class specified at no increased cost to WSDOT. This substitution should be documented in the diary, Inspector's daily report, or other records.

8-11 Guardrail

8-11.1 General Instructions

Since guardrail is expensive to construct and requires continual maintenance, it should be constructed only where hazardous conditions justify its use. During construction, the Project Engineer should investigate eliminating the need for guardrail by flattening the slopes, or otherwise removing, relocating, or modifying the hazard whenever possible. The final evaluation of the need for guardrail should be made in the field after the embankment has been constructed. Even though the fill has been widened for guardrail, it should not be constructed if it is determined at this time that guardrail is not needed.

See Section 710 of the *Design Manual* and other pertinent instructions for design criteria for guardrail.

For safety reasons, the guardrail shall have the ends flared away from the roadway and anchored in accordance with the appropriate *Standard Plans.* The construction inspector should pay particular attention to make sure that the rail washers are consistent with the current *Standard Plans*.

8-11.2 Erection of Posts

The posts shall be set to the true line and grade of the highway and spaced as shown on the *Standard Plans*. Post may be placed in dug or drilled holes. Ramming or driving will be permitted only if approved by the Engineer and if no damage to the pavement, shoulders and adjacent slopes results therefrom. The post holes shall be of sufficient dimensions to allow placement and thorough compaction of selected backfill material completely around the post.

8-11.3 Terminals

Installation of guardrail terminals listed in the Qualified Products List shall be by an installer, that has been trained and certified by the manufacturer or is supervised by a representative of the manufacturer. The inspector should request to see the certification. The date on the certification must not be prior to the latest approved effective date for the device. A listing of the latest approved effective dates will be sent to each Project Engineer's Office when changes are made or can be requested from the Design Office.

8-11.4 Measurement and Payment

Measurement and Payment Instructions are covered in Sections 8-11.4 and 8-11.5 of the *Standard Specifications*.

8-12 Chain Link Fence and Wire Fence

8-12.1 General

Four types of chain link fences are provided in the *Standard Plans*. Type 1 and 6 are the highest quality fence with top rail and tension wire along the bottom of the fabric.

Two types of wire fence are provided in the *Standard Plans*. Type 1 is a combination of barbed wire and wire mesh. Type 2 consists of barbed wire. Steel or wood posts may be used with either type provided that only one material is used consistently throughout the job.

8-12.2 Clearing and Grading

Since preservation of natural growth is being stressed, clearing will have to be performed specifically for the fence construction on many projects. In these cases, only the width necessary to accommodate the fence construction should be cleared. Some grading is usually necessary to prevent short and abrupt breaks in the ground contour that will affect the aesthetic appearance of the top of the fence. Care needs to be exercised to prevent clogging natural drainage channels while grading the fence line.

8-12.3 Measurement and Payment

Measurement and payment instructions are covered in Sections 8-12.4 and 8-12.5 of the *Standard Specifications*.

8-14 Cement Concrete Sidewalks

8-14.1 General

Air entrained concrete Class 3000 (Class 20) shall be used for construction of sidewalks. Forms may be of wood or metal and full depth of the sidewalk. The forms should be straight or uniformly curved and in good condition.

In rest areas and park areas where the sidewalks are normally laid out in a winding pattern rather than in straight lines, care must be taken in setting the forms so that the sidewalk will present a pleasing appearance with no kinks or angle breaks. The forms must be braced and staked sufficiently to maintain them to grade and alignment. Usually, spreaders are necessary to properly space the forms and hold them in position until the concrete is placed. If the Contractor uses thin strips of form material for winding sidewalks, more than one thickness with staggered joints should be used to obtain the smooth flowing lines. In forested areas, all roots should be removed or cut back. After the forms have been set to line and grade, the foundation shall be brought to the required grade, compacted and well dampened before placing the concrete.

8-14.2 Placing, Finishing, and Curing Concrete

After the concrete is placed, it should be struck off with a heavy iron-shod straightedge. The concrete should be traweled smooth with a steel trowel and then lightly brushed in a transverse direction with a soft brush. On grades of over 4 percent, the surface shall be finished with a stipple brush or as the Engineer may direct. Following brushing of the surface, the concrete shall be edged and jointed as shown in the plans or the *Standard Plans*. In areas adjacent to existing sidewalks, the jointing pattern should be similar to the existing pattern. Consideration should be given to placing crack control joints adjacent to cracks in the existing sidewalk if they are not going to be repaired. If the cracks in the existing sidewalk are full depth, they may cause reflective cracking in the new adjacent sidewalk.

Expansion joints shall be constructed at the locations and of the sizes as detailed in the plans or in the *Standard Plans*.

All concrete sidewalks shall be properly cured. During this curing period, all traffic, both pedestrian and vehicular, shall be excluded. Vehicular traffic should be discouraged and by no means allowed until the concrete has reached its design strength. There is a risk that the sidewalk can be damaged as it was not designed to take these loads. Before any decision to allow vehicles on a sidewalk there should be a clear agreement that any damage will be repaired and who will pay for it.

8-14.4 Measurement and Payment

Measurement and payment instructions are covered in Sections 8-14.4 and 8-14.5 of the *Standard Specifications*.

8-20 Illumination, Traffic Signal Systems, and Electrical

8-20.1 General

Illumination and traffic signal systems, due to the very nature of the work, are a highly specialized type of installation. In designing these systems, every effort is made to avoid problems for construction, maintenance, and the utility company. If problems arise, the Engineer should contact those responsible for the design and operations for help in solving them.

8-20.2 Materials

8-20.2A Approval of Source

All materials for installation on illumination and traffic signal projects shall be selected off the *Qualified Products List* (QPL) or be listed on a Request for Approval of Material (RAM). Items not selected off the QPL shall be submitted to the FOSSC Materials Laboratory for appropriate action on a RAM. This list shall be complete and cover all materials which are identified on the plans or in the specifications. The list shall include the source of supply, name of manufacturer, size and catalog number of the units, and shall be supplemented by such other data as may be required including catalog cuts, detailed scale drawings, wiring diagrams of any nonstandard or special equipment. All supplemental data shall be submitted in six copies.

The Record of Materials (ROM) from the FOSSC Materials laboratory will list items for which preliminary samples or data are required. Preliminary and acceptance samples shall be submitted as required by the ROM, received from the FOSSC Materials Laboratory at the beginning of the project or as noted on the RAM. See Section 9-4 for material specific acceptance requirements.

8-20.2B Shop Drawings for Illumination and Signal Standards

The Contractor is required to submit shop drawings for all types of signal standards and for light standards without pre-approved plans. Pre-approved plans are listed in the Contract Provisions. If light standards with pre-approved plans are proposed, no shop drawing submittal is required. There are two different approval procedures for shop drawings. They are Bridge and Structures office approval, and Project Engineer approval only. In either case, the Contractor is required to submit six sets of drawings. The two approval procedures include the following:

A. Bridge and Structures Office Approval

- Light standards without pre-approved plans.
- Types II, III, IV, V signal standards without pre-approved plans.
- Type SD (Special Design) signal standards.

B. Project Engineer Approval Only

- Types PPB, PS, I, RM and FB signal standards, *Standard Plan* J-7a.
- Types II, III, IV, V signal standards with pre-approved plans.

After the Contractor has submitted shop drawings, the Engineer shall make a field check of both contract plans and shop drawings. The Project Engineer is responsible for checking the geometric features of these items. Specific items that should be checked include the following:

- Foundation locations.
- Light source to base dimension (H1), if required in the special provisions and clearance to overhead utility wires.

- Mast arm lengths. If foundation offsets are changed, mast arm lengths must be adjusted.
- Horizontal dimensions from single standard pole centerline to signal head attachment points.
- Vertical dimensions from signal standard base plate to signal mast arm connection points. Assistance is available from the Traffic Design office in estimating mast arm deflection to ensure vertical clearance requirements are met.
- Orientations of mast arms and all pole-mounted appurtenances.
- Signal head mounting details.
- Hand hole location and orientation.
- Base treatment for lighting standards (fixed, or slip, or breakaway).

If there are no changes to dimensions or orientations, the Project Engineer shall mark the drawings with a statement that all standards shall be fabricated according to dimensions and orientations shown in the Contract.

If there are corrections, the Project Engineer shall note all corrections on one set of shop drawings, with green markings only, and attach copies of signal standard chart and/or luminaire schedule from contract, noting any dimension changes in green. Transmittal Letter, Form 410-025, shall be used to submit the entire package.

The Bridge and Structures office will conduct a structural review, and mark all sets in red, incorporating the Project Engineer's geometric review comments.

The six sets of shop drawings for supports without pre-approval shall be submitted to the Bridge and Structures office, which will coordinate approval with the FOSSC Materials Laboratory. After approval, the Bridge and Structures office will retain one set and forward two sets to the Materials Engineer and send three sets to the Project Engineer. One of Materials Engineer's sets will be forwarded to the Fabrication Inspector. The Project Engineer will send two sets to the Contractor, who will forward one set to the Fabricator. See the Shop Plans and Working Drawings Table in Chapter 1-2.4I of this manual.

If pre-approved shop plans have been submitted, a structural review by the Bridge and Structures office is not required. The Project Engineer shall mark all changes in red on all six copies. The Project Engineer will then retain one set of plans, forward one set to the Regional Operations/Construction Engineer, two sets to the Fabrication Inspector, and two sets to the Contractor, who will forward one set to the Fabricator. See the Shop Plans and Working Drawings Table in Chapter 1-2.4I of this manual.

All drawings shall be clearly marked ("Approved as Noted", "Returned for Correction", or "Approved") before returned to the Contractor, whether reviewed and checked by the Project Engineer or the Bridge and Structures Office.

8-20.3 Relations With the Serving Utility

Generally, during the design of an illumination or traffic signal system, the serving utility is consulted concerning the availability of power, the voltage needed, the location of the most convenient point of service, and agreements are prepared prior to the awarding of the contract. The Project Engineer should review all utility agreements and contact the serving utility as soon as the Contractor commences work to arrange for the actual service connections and other work which may have been agreed upon. The matter is important since, in many cases, the utility will have to extend lines, install transformers, and do other related work. Upon completion of the contract, the Project Engineer will instruct the serving utility to direct all future billings to the appropriate maintenance division.

8-20.4 Inspection

Inspection on electrical projects involves two aspects of work. The first of these is the physical aspect wherein conformance to the plan requirements relative to the materials used and general construction techniques must be the criterion for judgment. An Inspector who is thoroughly familiar with the requirements of Section 8-20 of the *Standard Specifications* and with normal construction techniques should be assigned the inspection responsibility for this portion of any signal or illumination project. The Fabrication Inspector shall be consulted if lighting or traffic signal standards arrive on the jobsite without prior inspection.

The second aspect of electrical work involves the conformance by the Contractor with the contract requirements in addition to the requirements of the State electrical construction codes and the National Electric Code. This aspect of inspection must be performed by an electrical Inspector. A further consideration within this aspect of work involves any changes authorized in the contract plans as it may affect circuit stability, circuit adequacy, and the ability of related electrical control devices to properly function through any such change of plans. The performance testing of the system is part of the second aspect of the electrical work.

Electrical work is a specialized field of endeavor within WSDOT; therefore the Project Engineer must arrange for the assistance of an electrical Inspector from the Regional office. The electrical Inspector shall make periodic inspections throughout the course of construction of all electrical projects and shall advise the Project Engineer of appropriate times to enable the Project Engineer to occasion the required field tests of electrical circuits, as discussed in

Section 8-20 of the *Standard Specifications*, at such times that cause a minimum interference of the work scheduled by the Contractor. Should any question arise on a project pertaining to the technical nature of the work, the Project Engineer shall consult with the electrical Inspector or with the Regional Traffic Engineer, if necessary.

Our plans and specifications are designed generally to conform with existing national electrical codes. There are instances when the Department permits methods of construction that are considered equivalent to state and national codes.

Generally, local inspection authorities do not inspect highway work that is within the state highway right of way. From time to time, however, the Department of Labor and Industries or local electrical inspectors may visit a project to inspect or review the Contractor's work. They should be treated courteously and their judgment respected. The Department does have authority to permit alternate methods when equivalent objectives can be met if the work is within the State right of way. Should any question arise over a conflict between our plans and their opinions, the matter should be referred to the Olympia Service Center Construction Office for advice.

8-20.5 As-Built Plans

The Project Engineer is required to submit As-Built Plans in accordance with Chapter 10-3.7 of this manual. For proper maintenance and repair of the electrical system, it is imperative that the location of all conduits and the diagram of all circuits be properly shown on the As-Built Plans.

Normally, the conduits should be constructed in the locations shown on the contract plans. Many times these conduits are positioned in a particular place to eliminate conflict with future construction.

Section 8-20.3(17) of the *Standard Specifications* requires the Contractor to submit any corrected shop drawings, schematic circuit diagrams or other drawings necessary to prepare the corrected as-built plans.

8-20.6 Construction

8-20.6A Foundations

The foundations shall be located and constructed as detailed on the plans wherever possible. When foundations cannot be constructed as detailed, due to rock, bridge footings, drainage structures, or other obstructions, an effective foundation will have to be developed for the conditions encountered and approval obtained. The location of lighting standards or signal standards shall not be moved without discussing the problem with the Regional Operations/ Construction Engineer and the Regional Traffic Engineer.

Foundations located on fills, especially those adjacent to bridge abutments, shall be deepened to provide stability as provided for in Section 8-20.3(4) of the *Standard Specifications*.

8-20.6B Conduit

Generally, conduit runs should be located on the outer shoulder areas, well away from the position where signs, delineators, guardrails and other facilities will be placed.

On new construction, all conduit located under paved surfaces shall be placed prior to construction of base course and pavement. It shall be the responsibility of the Project Engineer to see that all contractors on any project coordinate their work to this end.

Sufficient cover must be provided to protect the conduit from damage as provided in Section 8-20.3(5) of the *Standard Specifications*.

At locations where plastic conduit is allowed and hard rock is encountered within the minimum depth required, steel conduit should be substituted for the affected runs, and the depth adjusted as necessary.

8-20.6C Junction Boxes

In most designs, precast concrete junction boxes are being used. These boxes are simple to install. A sump is excavated and partially filled with gravel. The open-bottom box is then seated by working it into the gravel until the required grade is reached. Care must be taken in junction box location to provide for drainage. Junction boxes and conduit should be placed away from areas that water is funneled to prevent it from entering into the conduits. For example, the bottom of ditches, sag vertical curves should be avoided or other low spots where water is likely to collect.

8-20.6D Wiring

An electrical system is only as good as its conductors, terminals and splices, and it is important that the requirements of Section 8-20.3(8) of the *Standard Specifications* be strictly adhered to. If there is any doubt concerning the adequacy of a connector, the advice of the Regional Electrical Inspector should be obtained.

Practically all wiring for traffic signal and illumination systems is exposed to the elements, and it is very important that all splices be insulated with waterproof material, as prescribed in Section 8-20.3(8) and 9-29.12 of the *Standard Specifications*.

8-20.6E Ground

Because of the hazards of electrical shock, all grounds and ground bonds referred to in the plans and in the special provisions should be given special attention to ensure their effectiveness and completeness. See *Standard Specifications* Section 8-20.3(9) and *Standard Plan* J-9a.

8-20.6F Lighting Standards, Strain Poles

In erecting lighting standads or signal standards, rope or fabric slings should be used to reduce the danger of damage to galvanized or finished aluminum surfaces.

8-20.6G Existing Illumination Systems

Where existing illumination or traffic signal systems are to be removed, and the material stockpiled at the site of the work for delivery to WSDOT, it will be advantageous if prior arrangements are made to have Department personnel meet the contractor at the delivery storage site. These arrangements should be made with either the Regional Maintenance Engineer or the Regional Traffic Engineer.

8-20.6H Service Equipment

Generally, Type “B”, “C”, “D”, and “E” service equipment, cabinets etc., will be factory assembled from drawings submitted with the material lists. Type “A” service equipment will be assembled in the field. Care shall be taken to ensure compliance with all provisions of the plans and specifications, and to determine that all bonds and grounds are complete.

8-20.6I Traffic Signal Systems

Traffic signal systems are a very specialized type of work. All work shall be done in strict accordance with the plans, the special provisions, and the *Standard Specifications*. The Regional Traffic Engineer will be responsible for the proper timing of each signal installation and will assist the Engineer in any way needed to ensure the proper completion of the work.

8-20.6J Testing

All illumination and traffic signal systems shall be tested as outlined in Sections 8-20.3(11) and 8-20.3(14)D of the *Standard Specifications*. Particular care shall be taken in the performance of test no. 3. The Project Engineer shall insure that readings of the megohmmeter taken on every electrical circuit are furnished to the Regional Electrical Inspector. Caution must be exercised in the performance of this test to protect control mechanisms from damage due to the nature of the test voltages used. Also, the records made of this series of tests must identify the readings observed with each branch of the electrical circuit involved. Representative sampling of the Contractor’s test readings may be made by the Electrical Inspector using State test equipment.

Field Test No. 4 of Section 8-20.3(11) of the *Standard Specifications* is to be performed on all illumination and signal projects. It is especially important that the Project Engineer obtain the consultation of the Regional Traffic Engineer in this portion of the field test when the tests are being performed in a traffic signal controller. Since the mechanism in these controllers is so interrelated and complex, only persons thoroughly schooled in such control mechanisms are qualified to determine when particular timing circuits and sequences are functioning properly. The simple turning on of an electrical switch and watching a light come on is not an acceptable electrical test.

8-20.6K Electrical Safety Tags

Commencing at the time that the serving utility makes the power drop to WSDOT electrical service cabinets, electrical safety tags shall be used. Any electrician working on any main or branch circuit shall cause that circuit to be de-energized and shall place an electrical safety tag at the point that the circuit is open. The electrician shall sign the electrical safety tag and only that electrician may make subsequent circuit alterations or remove the tag.

If the circuit that the electrician de-energized to work on is serving traffic, the electrician shall arrange the work so the circuit may be energized for nighttime operation. The electrician shall remove the safety tag and energize the circuit before leaving the jobsite and upon returning to work on the circuit, shall de-energize it again and place an electrical safety tag back on the circuit.

8-20.7 Prevention of Corrosion of Conduit

Installation of conduit should be supervised to ensure against physical abrasion of the conduit or for rust on threads which would destroy the integrity of the galvanizing.

Electrically caused corrosion of metallic conduit is easy to avoid by proper construction supervision. If the causes of this type of corrosion are not properly inspected and controlled, the extent of electrically caused corrosion is commonly far more severe than the chemically caused corrosion.

In any metallic conduit system, the metallic conduit itself serves an electrical function. This function is to provide a low resistance return path for electricity which may leak out of an electrical conductor due to scraped insulation, cracks, or other causes. A point at which electricity can leak or escape from an electrical wire is called a “fault”. When electricity flows through any non-insulated path (conduit), it can establish an electrical phenomenon called electrolysis. Electrolysis results in the transfer of metal from one location to metal at another location. Through this means, the metal that was used to make the metallic conduit may be transferred to other locations on the same conduit run or to other metallic appurtenances. With the ultimate degeneration of conduit at any point, the return path for the electricity through the conduit system itself is destroyed.

In the event that a portion of a conduit was destroyed in this means and with the subsequent damage or failure of electrical conductors beyond that point, electricity would not have the ability to complete the circuit from the wire through the conduit system and return to service enclosure which would, in turn, cause a fuse to blow or a circuit breaker to trip. Hence, the protection offered by our electrical overload equipment is totally nullified.

To prevent this type of ultimate failure of the electrical system, all conduit joints should be carefully inspected to ensure that they are physically tight and that a good electrical bond does exist from one piece of conduit through the nipple to each adjoining piece of conduit. Additionally, conduit threads should be painted with an approved corrosion inhibiting conduit paint. Any loose or improper union between conduit sections or conduit and junction boxes is a point of high resistance to the flow of electricity. When such a condition exists and with the faulting of an electrical conductor within the system, electricity does not have an easy return to its point of service. Electricity then takes alternate routes through the earth, structures, etc. This, in particular, establishes the condition of electrolysis and results in even greater failure of the physical system. The physical system failure attributed to this may present itself from two to five years after construction.

The seriousness of this matter cannot be overstressed in electrical construction. It is so important that if one factor, and only one factor, was to be examined on each electrical project, it would be the search for conditions that would result in electrolysis and the sloppy workmanship that causes them.

Additionally, to prevent electrical damage to the conduit system and, in particular, during the time of project construction, the conduit shall not be used as a temporary neutral return nor shall the conduit be used for the ground of construction equipment, i.e., welders, hand tools, etc.

8-20.8 Measurement and Payment

Measurement and Payment instructions are covered in Sections 8-20.4 and 8-20.5 of the *Standard Specifications*.

8-21 Permanent Signing

8-21.1 General

The complex design of today's freeway facilities has created an increased demand on signing. Signing is one of the features a layperson readily can evaluate on a new facility. Improper or inadequate signing detracts from the quality of the basic construction features of the project. Misplaced or irregular usage of signs on interchanges creates a critical hazard to traffic and hinders the proper operation of the facility.

Today's destination sign has increased in size to the extent that it is no longer a minor installation and the amount of time required to install an average freeway sign project has been extended to the point that close cooperation between all forces on highway construction projects is vital so that the facility is signed properly when opened to traffic.

Any sign that is erected on a section of roadway carrying traffic ahead of the time the message on the sign will be applicable to the traffic shall be covered in accordance with Section 8-21.3(3) of the *Standard Specifications* until the appropriate time for uncovering it. It is essential that signs with conflicting messages not be displayed.

8-21.2 Sign Location

Since it is impossible to visualize the actual physical features of final grade elevations, vertical curves, trees, and other factors that affect proper sign placement in the initial sign plan stage, it becomes necessary to make adjustments in sign location just prior to installation. The Project Engineer and Regional Traffic Engineer should coordinate a study of each location to determine that each sign will be in the most efficient location for visibility and nighttime reflectivity. Advance Destination signs may be moved up to 500 feet (150 meters) in either direction if severe ground or slope conditions are encountered. If the sign must be moved more than 500 feet (150 meters), consideration should be given to revising the distance on the sign. All sign locations shall be staked by the Engineer prior to installation by the Contractor.

Following staking of the signs, the Project Engineer should furnish the Contractor with the list of post lengths for steel posts. For wooden posts, the Contractor should be able to order posts in commercial lengths from the approximate lengths shown in the plans. Final lengths of timber posts will be determined or verified by the Engineer at the request of the Contractor prior to fabrication.

Anytime a new bridge mounted sign bracket, cantilever sign structure, or sign bridge structure is erected, a new structure inventory identification number needs to be assigned to the structure by the Bridge and Structures Office, Bridge Preservation Section. The Project Engineer shall request a sign structure identification plate for installation on the sign support by the Contractor. Installation instructions will be provided by the Bridge Preservation Section.

Anytime an existing bridge mounted sign bracket, cantilever sign structure, or sign bridge structure is removed from service, the Contractor shall remove the identification plate and give it to the Project Engineer. The Project Engineer will return the identification plate to the Bridge Preservation Section so the sign structure can be removed from the inventory.

8-21.3 Approval of Materials

All materials for installation on permanent signing projects should be selected off the *Qualified Products List* (QPL) or listed on the Request for Approval of Materials (RAM). Materials listed on RAM not listed on the QPL shall be submitted to the FOSSC Materials Laboratory for appropriate action as soon as possible. Shop drawings of sign structures shall be reviewed by the Project Engineer for conformance with *Standard Plans* G-2 through G-9b. The Project Engineer approves plans in conformance with the standard plans. Any request to deviate from standard plans should be reviewed by the Bridge and Structures Office.

The six sets of shop drawings of special design sign structures and/or special sign fittings shall be submitted to the Bridge and Structures office, which will coordinate approval with the FOSSC Materials Laboratory. After approval, the Bridge and Structures office will retain one set and forward two sets to the Materials Engineer and send three sets to the Project Engineer. One of the Materials Engineer's sets will be forwarded to the Fabrication Inspector. The Project Engineer will send two sets to the Contractor, who will forward one set to the Fabricator.

If submitted for structural review by the Bridge and Structures office is not required. The Project Engineer shall mark all changes in red on all six copies and distribute per the Shop Plans and Working Drawings Table in Chapter 1-2.4I of this manual.

All drawings shall be clearly marked ("Approved as Noted", "Returned for Correction", or "Approved") before returned to the Contractor, whether reviewed and checked by the Project Engineer or the Bridge and Structures Office.

The special provisions of the contract deal to a great extent with the proper fabrication of the signs to be installed and the manufacturing process requiring the use of approved application equipment. It is necessary, therefore, that the firm who actually makes the signs be approved as a source of supply. Such approval is made by the FOSSC Materials Laboratory.

8-21.4 Inspection

A "fabrication approval" decal dated and signed by the Sign Fabrication Inspector shall appear on the back of all permanent signs that are received on the project. Signs without such indicated approval shall not be permitted on the project. Damaged signs shall be rejected at the project site. Upon completion of inspection, a copy of the Sign Acceptance Report will be submitted to the Engineer through the Regional Operations/Construction Engineer.

At the completion of a sign installation, the Project Engineer shall request the Regional Traffic Engineer to assist in making a final inspection.

8-21.5 Bolting Base Connections

It is important to ensure the proper torque is applied to bolts connecting the bases when installing *Standard Plan* G-8 and G-8a Sign Structures. Procedures for assembling and inspecting high strength bolts are covered in Chapter 6-3.6B of this manual. All base assemblies shall be checked with a torque wrench. This can be accomplished either by observing the Contractor's torquing or by the Inspector utilizing the Region's torque wrench. Documentation of the torquing method used should be accomplished by proper entries in the Inspector's Daily Reports.

8-21.6 Measurement and Payment

Measurement and Payment instructions are covered in Sections 8-21.4 and 8-21.5 of the *Standard Specifications*.

P65:DP/DM

Page

9-1 General 9-1
9-1.1 Introduction 9-1
9-1.2 Requirements 9-1
9-1.3 Sample and Test Numbering 9-1
9-1.3A Preliminary Samples and Tests 9-1
9-1.3B Acceptance Samples and Tests 9-1
9-1.3C Vacant 9-1
9-1.3D Verification Samples and Tests 9-1
9-1.4 Form Letters 9-1
9-1.5 Material Certification 9-1
9-1.5A Record of Materials (ROM) 9-5
9-1.5B Approval of Materials 9-6
9-1.5C Vacant 9-7
9-1.5D Materials Fabrication Inspection Office — Inspected Items Acceptance 9-7
9-1.5E Manufacturer's Certificate of Compliance 9-8
9-1.5F Concrete Pipe Acceptance Report 9-9
9-1.5G Sign Acceptance Report 9-9
9-1.6 Control of Materials 9-10

9-2 Vacant 9-10

9-3 Vacant 9-10

9-4 Specific Requirements for Each Material 9-10
9-4.1 Portland Cement or Blended Hydraulic Cement 9-11
9-4.2 Bituminous Materials 9-11
9-4.3 Hot Melt Traffic Button Adhesive 9-12
9-4.4 Concrete Aggregates 9-12
9-4.5 Surfacing Aggregates (Crushed Screening, Crushed Cover Stone, Ballast, Shoulder Ballast, Crushed Surfacing Base and Top Course) 9-13
9-4.6 Aggregates for Asphalt Concrete and Asphalt Treated Base 9-13
9-4.7 Asphalt Concrete and Asphalt Treated Base 9-13
9-4.8 Mineral Filler 9-14
9-4.9 Gravel Base and Bank Run Gravel for Trench Backfill 9-14
9-4.10 Pit Run Aggregates (Gravel Backfill for Foundation CL. B, Walls, Pipe Zone Bedding, Drains and Drywells; Backfill for Sand Drains, Sand Drainage Blanket, Bedding Material for Rigid Pipe, Thermoplastic Pipe; Foundation Material Class A, B, and C, Gravel Borrow, Common Borrow, Select Borrow) 9-14

		Page
9-4.11	Vacant	9-15
9-4.12	Premolded Joint Filler	9-15
9-4.13	Elastomeric Compression Seals	9-15
9-4.14	Two Component Poured Rubber Joint Sealer	9-15
9-4.15	Hot Poured Joint Sealant	9-15
9-4.16	Concrete Culvert, Sewer, Drain, and Underdrain Pipe	9-16
9-4.17	Galvanized Steel, Aluminized Steel and Aluminum Corrugated Metal Culvert, Drain Pipe and Perforated Underdrain Pipe	9-16
9-4.18	Perforated Underdrain Pipe	9-17
9-4.19	Structural Plate Pipes and Arches	9-17
9-4.20	Gray-Iron Castings, Steel Castings, Ductile-Iron Castings (Catch Basin Frames and Grates, Manhole Rings and Covers, Monument Case and Cover, etc.)	9-17
9-4.21	Sanitary Sewers	9-18
9-4.22	Steel for Bridges	9-18
9-4.23	Unfinished Bolts (Ordinary Machine Bolts), Nuts, and Washers	9-19
9-4.24	High Strength Bolts, Nuts and Washers	9-19
9-4.25	Anchor Bolts	9-19
9-4.26	Reinforcing Bars for Concrete	9-19
9-4.27	Epoxy Coated Reinforcing Steel Bars for Concrete	9-20
9-4.28	Mechanical Splices	9-20
9-4.29	Rebar Chairs, Dobies, and Spacers	9-20
9-4.30	Dowels and Tiebars for Concrete Pavement, incl. Epoxy Coated	9-20
9-4.31	Wire Reinforcement for Concrete	9-21
9-4.32	Bridge Approach Slab Anchors	9-21
9-4.33	Prestressing/Post Tensioning Reinforcement — Strand	9-21
9-4.34	Prestressing/Post Tensioning Reinforcement — Bar	9-21
9-4.35	Paints for Structures	9-22
9-4.36	Structural Timber and Lumber — Untreated	9-22
9-4.37	Treated Timber and Piling	9-22
9-4.38	Piling — Untreated	9-23
9-4.39	Steel H-Piling	9-23
9-4.40	Hollow Steel Piling and Jack Casing	9-23
9-4.41	Precast Concrete Catch Basins, Manholes, and Inlets	9-23
9-4.42	Riprap, Quarry Spalls, Slope Protection, and Rock Wall	9-23
9-4.43	Semi-Open Slope Protection	9-24
9-4.44	Plant Material	9-24
9-4.45	Topsoil Type A	9-24
9-4.46	Seed	9-25
9-4.47	Fertilizer	9-25
9-4.48	Mulch	9-25
9-4.49	Irrigation System	9-26

Page

9-4.50 Fencing 9-26
9-4.51 Beam Guardrail, Guardrail Anchors, and Glare Screen 9-27
9-4.52 Guardrail Posts and Blocks 9-27
9-4.53 Miscellaneous Precast Concrete Products (Block Traffic Curb, Precast Traffic Curb) 9-27
9-4.54 Prestressed Concrete Products 9-28
9-4.55 Raised Pavement Markers, Types 1, 2, and 3 9-28
9-4.56 Signing Materials 9-28
9-4.57 Concrete Curing Compounds 9-28
9-4.58 Admixtures for Concrete 9-29
9-4.59 Plastic Waterstop 9-29
9-4.60 Epoxy Resins 9-29
9-4.61 Resin Bonded Anchors 9-29
9-4.62 Gabion Baskets 9-30
9-4.63 Sign Structures 9-30
9-4.64 Conduit 9-30
9-4.65 Electrical Conductors 9-31
9-4.66 Signal, Luminaire, and Strain Poles 9-31
9-4.67 Anchor Bolts for Luminaire, Signal Poles, and Sign Structures 9-31
9-4.68 Luminaires and Lamps 9-32
9-4.69 Water Distribution System 9-32
9-4.70 Elastomeric Bearing Pads 9-33
9-4.71 Fabric Bearings Pad 9-33
9-4.72 Precast Concrete Barrier and Wall Panels 9-33
9-4.73 Safety Bars, Cattle Guards, Sign Mounting Brackets, Steel and Special Guardrail Posts, Steel Sign Posts 9-34
9-4.74 Metal Bridge Rail 9-34
9-4.75 Construction Geotextiles 9-34
9-4.76 Concrete 9-34
9-4.77 Water for Concrete 9-35
9-4.78 Expansion Joints 9-35
9-4.79 Controller Cabinet Assembly 9-35

9-5 Guidelines for Job Site Control of Materials 9-36
9-5.1 General 9-36
9-5.2 Sampling and Testing Schedule 9-36
9-5.2A General 9-36
9-5.2B Reducing Frequency of Testing 9-36
9-5.2C Sampling and Testing for Small Quantities of Materials 9-36
9-5.3 Point of Acceptance 9-37
9-5.4 Basis for Acceptance 9-37
9-5.4A Basis for Acceptance — Statistical Evaluation 9-37
9-5.4B Basis for Acceptance — Non-Statistical Evaluation 9-37

Page

9-5.5 Testing Staff Qualifications and Independent Assurance Program 9-38
9-5.5A Testing Staff Qualification 9-38
9-5.5B Independent Assurance (IA) Program 9-42
9-5.6 Tolerance Limits 9-45
9-5.7 Acceptance Sampling and Testing Frequency Guide 9-51

9-6 Radioactive Testing Devices 9-53
9-6.1 Administration and Safety 9-53
9-6.2 Radiation Administration Officer (Region Materials Engineer) 9-54
9-6.3 Radiation Safety Officer 9-54
9-6.4 Authorized Operators 9-55

9-7 Vacant 9-55

9-8 WSDOT Testing Methods 9-55
9-8.1 Calibrated/Verified Equipment for Testing 9-55
9-8.2 Field Test Methods for Materials 9-56
9-8.2A Testing Modules 9-57
9-8.2B Individual Tests Method 9-58
9-8.2C Contents for Test Procedures in This Manual 9-59

9-1 General

9-1.1 Introduction

The quality of material used on the project will be evaluated and accepted in various ways, whether by testing of samples, visual inspection, or certification of compliance. This chapter details the manner in which these materials can be accepted.

9-1.2 Requirements

Requirements for materials are described in Section 1-06 and Division 9 of the *Standard Specifications for Road, Bridge and Municipal Construction* (M 41-10). Tolerance limits and a procedure for acceptance of certain materials are given in Chapters 9-5.4 and 9-5.6. For inspection of course thickness, the maximum deviations for measured thickness of surfacing and paving see Chapter 1-6 of this manual.

9-1.3 Sample and Test Numbering

A separate series of numbers, starting with No. 1 in each instance, shall be used for acceptance, independent assurance, and verification samples for each type of material for which there is a separate bid item. Verification samples shall be referenced to the corresponding Manufacturer's Certificate of Compliance.

9-1.3A Preliminary Samples and Tests

Preliminary samples are intended to show the general character of the materials available or proposed for use. The sample may be taken from a natural deposit, the general stock of a dealer, or elsewhere. The material sampled may require further treatment before it will meet the specification requirements. Preliminary samples are a basis for approving which aggregate site or brand of material will be considered for use. Deliveries cannot be accepted on the basis of preliminary samples unless the samples represent an identified lot of materials.

Unless specified for a particular purpose, preliminary sampling and testing of materials from a potential source are not mandatory functions. It is to be performed when requested by the Project Engineer, or the Field Operations Support Service Center (FOSSC) Materials Laboratory on the Request for Approval of Material (DOT Form 350-071).

In order to insure consistency in sampling for aggregate sources which will be approved for an extended period of time, the preliminary sample must be witnessed or taken by a designated representative of the Regional Materials Engineer.

Before sampling, check to see whether previous preliminary test reports are available. If preliminary test reports are available and confirm that the material meets the contract documents, additional tests may not be needed. If in doubt the FOSSC Materials Laboratory is available to provide assistance.

9-1.3B Acceptance Samples and Tests

Acceptance samples and tests are defined as those samples tested for determining the quality, acceptability, and workmanship of the materials prior to incorporating the materials into the project. The results of these tests are used to determine conformance to the contract documents. The minimum frequency for sampling and testing of acceptance samples is detailed in Chapter 9-5.7 of this manual.

9-1.3C Vacant

9-1.3D Verification Samples and Tests

Verification samples and tests are used for making checks on the reliability of a manufacturers test results when acceptance of the material is based upon a Manufacturer's Certificate of Compliance.

9-1.4 Form Letters

A number of form letters have been prepared as an aid to the Project Engineer in transmitting information to the laboratory. In order to minimize delays to completion of material testing, transmittal letters should include all the information that is pertinent to the sample in question. In order to assist the laboratory, copies of the transmittal letters should be retained in the Project Engineers Office. The following is a list of the forms that may be used for transmittal of samples and/or information to the materials laboratory:

350-009	Concrete Test Cylinder Transmittal Letter
350-016	Asphalt Sample Label
350-026	Preliminary Sample Transmittal Letter
350-040	Proposed Mix Design
350-042	Report of Beam Test
350-056	Sample Transmittal
350-071	Request for Approval of Material
350-074	Field Density Test
350-092	Asphalt Concrete Pavement Compaction Control Report
350-114	Summary Report of Acceptance Sampling and Testing
350-115	Contract Materials Checklist
351-006	Soil Sample Transmittal Letter
351-015	Daily Compaction Test Report
410-025	Transmittal of Falsework, Form and Shop Drawings

9-1.5 Material Certification

The Project Engineer is responsible for obtaining all required materials documentation or otherwise ensuring that all required materials testing is completed, all with satisfactory results, prior to the materials being incorporated into the project. The Project Engineer is also responsible for maintaining a successful accounting for the materials incorporated into the project in order to

support the Region's Certification of Materials. Management and accounting for materials used in the construction of a project are to be administered in the same manner regardless of its funding source; Federal, State, or a combination of both.

The Region is responsible for periodic reviews of each project's materials documentation at the Project Engineer's office. Upon completion of the project the Region will prepare a Region Materials Certification letter listing all variances that were identified and their resolution. On projects that involve Federal participation where material deficiencies are documented, these deficiencies must be resolved with the FOSSC Construction Office through the Region before the Region Certification of Materials can be completed. On projects that involve State Funds only, documented deficiencies must be resolved with the Region prior to the Region Certification of Materials. The Regional Administrator or their designee is responsible for signing and distributing the certification letter.

The FOSSC Materials Laboratory will also perform compliance reviews on a sampling of completed projects statewide where the materials have been certified.

Definitions

Certification: A Region Materials Certification based on a documented evaluation of the project's materials inspection, sampling, testing, and other materials acceptance activities for their conformance to the contract documents, *Standard Specifications* and this manual. The certification reflects the project's conformance with the Record of Material as adjusted by the Project Engineer for:

1. Actual project quantities utilized,

2. Acceptance practices as provided for in this manual including Chapters 1-2.8 and 9-5.2,

3. Adjusted sampling/testing frequencies as provided for in Chapter in 9-5.2, and

4. Work added by Change Order.

Variance: An identified difference between the materials acceptance requirements noted in this manual, the contract documents, the *Standard Specifications,* and a review of the completed projects Record of Materials. All variances must be noted. Such notations will need to include the basis by which the material was accepted and how the requirements for that material were met. Any variance between the recognized acceptance requirements and the project Engineers use of the material must be resolved with either the Region, FOSSC Construction Office, and/or FOSSC Materials Laboratory, as appropriate.

Material Certification Process

Field Operations Support Service Center (FOSSC)

1. FOSSC Materials Laboratory (Documentation Section)

   a. Prepare the initial Record of Material for all major items of materials listed in the contract.

   b. Provide technical support, certification guidelines, format, and suggested documents. See Figure 9-1 for Contract Materials Checklist (DOT Form 350-115, latest version). See Figure 9-2 for examples of the Region Materials Certification letter and its distribution.

   c. Conduct Compliance Reviews on a sampling of completed projects statewide where the Region has certified the materials.

2. The FOSSC Construction Office

   a. Receives variances for federal aid projects identified during the Region's materials certification review.

   b. Coordinates FHWA and Region to determine funding eligibility for variances.

   c. Prepares response to Region identifying degree of participation (Letter of Resolution).

Region

1. Project Engineer

   a. Sets up and maintains a materials documentation system.

   b. Maintains and monitors a current Record of Material ensuring materials certification throughout the course of the project.

   c. Identify, document, and justify all materials variances including determination and acceptance of noncritical items in accordance with Chapter 1-2.8 of this manual.

   d. Prepares the Region Materials Certification package, which includes the Region Materials Certification letter, identified variances, Letters of Resolution for all identified variances on federal aid projects and resolution actions taken. This package also includes a completed Contract Materials Checklist (DOT Form 350-115). The certification package is submitted to the Region Construction Manager for review. The certification letter is to be addressed to the State Construction Engineer.

2. Regional Operations/Construction Office

   a. The Region shall review projects according to Chapter 10-5 of this manual for documentation requirements including materials.

   b. Resolve materials variances identified by the Project Engineer and the Region's review of materials documentation at the Region level for State funds only projects. Resolve materials variances on Federal aid projects through contact with the FOSSC Construction Office.

   c. Review certification package for completeness.

   d. Submit certification letter to Regional Administrator for signature.

Washington State Department of Transportation

Contract Materials Checklist

Contract Number	Sign Route	Federal Aid Number(s)
Project Title		

		Yes	No*	N/A	Item No.(s)
1	All materials/products used in the construction of this project, including items added by Change Order, have been approved & are listed on the Record of Materials.		**		
2	The actual materials/products used along with the actual basis for acceptance of those materials and products has been documented.		**		
3	All uses of proprietary items, including those listed in the Special Provisions and/or contractor provided QPL items, are documented.				
4	When required, change of material/product letters and a revised RAM were initiated by the contractor.				
5	A Change Order has been completed for all materials accepted and incorporated into the project, but which failed to meet the required specifications when tested.		**		
6	An appropriate credit has been received for all non-specification materials used.		**		
7	Modifications to testing/inspection procedures, including CM 1-2.8A, have been explained and documented by the Project Engineer prior to construction of the item.				
8	Acceptance based on Sampling and Testing for Small Quantities has been documented. CM Chapter 9-5.2C.				
9	Where Manufacturers Certifications were not provided prior to material or product installation, the Project Engineer has provided specific prior approval for the work to continue in accordance with 1-06.3 of the Standard Specifications.				
10	All required acceptance actions and documentation were completed and satisfactory test results demonstrated before payment was made on each item.				
11	Acceptance sampling & testing frequencies for each item accepted is adequate for the total quantities of those items incorporated into the project.		**		
12	All Acceptance Sampling and Testing completed by the Project Engineer utilized Qualified Testers and Verified Testing Equipment in accordance with the Qualified Tester program.				
13	All Fabrication Inspected items accepted have been documented in accordance with CM 9-1.5C.		**		
14	The contractor has submitted all required Manufacturer Certifications and Mill Certifications, the Certifications represent the specification requirements noted in the contract, and quantities represented by the certifications match or exceed the final quantities used.		**		
15	All required catalog cuts and/or shop drawings have been approved and are on file.		**		
16	All required Certificates of Materials Origin have been received and are on file. (Fed Aid projects only)		**		

***** Checklist items marked **"No"** constitute a Materials Certification deficiency. Each **"No"** requires the contract item number for the affected item to be shown along with an attachment to the Materials Checklist detailing the circumstances of use, the method used for acceptance of the material, the Project Engineer's evaluation of the material, suitability for its application, and determination as to whether or not it may have met the specification in spite of the materials documentation oversight. If the project is Federally funded, the Project Engineer should also include a recommendation for Federal participation in light of the use of undocumented materials.

****** These specific materials deficiencies on Federal Aid projects must be resolved through OSC Construction and may result in the loss of Federal participation.

Project Engineer — Date

Region Construction Engineer/Operations Engineer/Area Engineering Manager — Date

Figure 9-1

Washington State
Department of Transportation
Sid Morrison
Secretary of Transportation

Transportation Building
P.O. Box 47300
Olympia, WA 98504-7300

(Name)
Assistant Secretary for Field
Operations Support Service Center
Transportation Building
Olympia, WA 98504

Cont. No: SR-
F.A. No.:
Section:

Date Completed:

Dear Sir:

This is to certify that:

The results of acceptance sampling and testing completed for the project referenced above, confirm that the materials incorporated into the construction of the project were found to have met the requirements as outlined in the contract plans, provisions, and *Standard Specifications*.

There were no exceptions.

OR:

This is to certify that:

The results of the tests on acceptance samples indicate that the material incorporated in the construction operations controlled by sampling and testing were in conformance with the approved plans and specifications, and such results compare favorably with the results of independent assurance sampling and testing.

Exceptions to the plan and specifications are explained on the attached sheet.

Very truly yours,

Regional Administrator

RGF
Attachment

cc: FHWA, 40943
OSC Materials Engineer, 47365
OSC Const. Documentation Engineer, 47354
OSC Comptroller, 47420
Regional Oper./Const. Engineer
Project Engineer

Figure 9-2

e. Distribute signed Region Materials Certification letter. The original is submitted to the Assistant Secretary for Field Operations, with copies sent to FHWA, FOSSC Materials Engineer, FOSSC Construction Office, and Finance and Administration Service Center Comptroller. A copy of the Letter of Resolution shall be attached if there are any variances.

3. Regional Administrator

   a. Signs the certification letter.

4. Finance and Administration Service Center Accounting

   a. Completes the necessary paperwork.

Compliance Review for Materials Certification Process

Compliance reviews will be performed by the FOSSC Materials Laboratory to document how well project records conform to materials certification standards. Upon receipt of a completed Region Materials Certification letter from the Regional Operations/Construction Office, the FOSSC Materials Laboratory will notify the Region within 60 days of intent to perform a compliance review on that project. If the project is selected for a compliance review, it will be scheduled within 180 days of notification to the Project Office.

The compliance review will normally be conducted at the project office unless arrangements are made for it to be conducted elsewhere.

The goal is to perform a compliance review on at least one project per project office every two years. Compliance reviews may be conducted more frequently as appropriate. Projects will be selected with consideration given to project size and complexity.

The records maintained and developed by the Project Engineer for acceptance of the materials and the identification of variances will be reviewed.

Upon completion of the review, the findings will be discussed with the Project Engineer and/or his representative. A report of the findings will be prepared and sent to the Project Engineer within 60 days after the review. A copy will be sent to the Regional Documentation Engineer, Construction Manager, FOSSC Construction Office, and the FHWA Division Office.

If the Compliance Review shows a discrepancy of a serious nature, the Construction Manager will correct any such discrepancy in the process.

The following items of documentation are required to develop the Material Certification and must be made available for review:

1. Record of Materials, as revised and amended by the Project Engineer (ref. 9-1.5A)

2. Request for Approval of Material (ref. 9-1.5B)

3. Comparison of Quantities (Region Final)

4. List of Change Orders

5. Reduced Frequency Testing Approval

6. Test Results

   a. Acceptance Test Reports

   b. Assurance Test Reports (where applicable)

   c. Independent Assurance Test Reports (where applicable)

   d. Verification Test Reports (Cement and Liquid Asphalt)

7. Manufacturer's Certificate of Compliance (ref. 9-1.5E)

   a. Concrete Pipe Acceptance Report (ref. 9-1.5F)

   b. Lumber Grading Certificate

   c. Certification of Cement Shipment

   d. Notice of Asphalt Shipment or Certified Bill of Lading

   e. Any other certificate required by the contract documents

8. Inspected Items Acceptance (ref. 9-1.5D)

9. Catalog Cuts (Product Data Sheet)

10. Small Quantity Acceptance Documentation

11. Proprietary or Qualified Products List (QPL) Item Acceptance Documentation (ref. 9-1.5B)

12. Sign Acceptance Report (ref. 9-1.5G)

13. Field Acceptance Reports, Field Note Records, and/or Inspectors Daily Reports

14. Follow-up actions for excessive variations between the Acceptance Sample and the Independent Insurance Sample Test Results (when applicable)

9-1.5A Record of Materials (ROM)

A listing of all major construction items for each project is provided by the FOSSC Materials Laboratory, establishing a Record of Materials (ROM) specific for that project. For these major construction items, the ROM identifies the kinds and quantities for all materials deemed to require quality control testing. It further identifies the minimum number of acceptance and verification samples that would be required for acceptance of those materials. The minimum number of acceptance tests is based on the planned quantities for the project and should be adjusted for the actual quantities used. Also listed are those materials requiring other actions, such as fabrication inspection, Manufacturer's Certificate of Compliance, shop drawings, or catalog cuts.

The acceptance action and/or numbers of samples listed are the minimum requirements for the Project Engineer's acceptance of those materials and the minimum requirements necessary for the Region's certification for the materials used on that project. The FOSSC Materials

Laboratory will forward the Record of Materials electronically to the Regional Materials Engineer, and Project Engineer shortly after the contract is awarded. The copy submitted to the Project Engineer is intended as a tool to assist the project office in tracking the samples approved, samples tested, Manufacturer's Certificate of Compliance, shop drawings, catalog cuts received, and other pertinent data necessary for the Project Engineers and the Regions certification of materials.

The acceptance requirements shown on the Record of Material may be modified by the Contractors specific Requests for Approval of Material. In addition the ROM is based on the FOSSC Laboratory's review of the major items of construction identified by the contract Summary of Quantities. Reviewing the contract plans and provisions may also identify additional materials documentation requirements as well as major construction items that require additional materials not accounted for in the FOSSC Laboratory's initial review of the project. These additional materials documentation requirements should be added to the ROM and tracked for completion throughout the course of the project work.

The accuracy of the ROM and Certification of Materials is largely the responsibility of the Project Engineer.

Where the ROM is not clear or there appears to be opportunities to adjust the acceptance requirements that have been identified, the Project Engineer is encouraged to contact the Region Materials Engineer or the FOSSC Materials Laboratory for assistance.

In order to ensure clarity upon completion of the work and to allow for easy certification of the project by both the Project Engineer and the Region, it is important that the project ROM be accurate and actively maintained throughout the course of the project. Any changes to the acceptance requirements, additional materials used, or any additional materials added to the project by change order should be accurately documented and tracked in the project Record of Materials.

9-1.5B Approval of Materials

To fulfill the requirements of *Standard Specifications* Section 1-06.1, the Contractor must notify the Engineer of all proposed materials prior to use. This may be accomplished by a Qualified Product List (QPL) submittal or by submitting a Request for Approval of Material (RAM) (DOT Form 350-071). Approval of the material does not necessarily constitute acceptance of materials for incorporating into the work. Additional acceptance actions, as noted by the code on the RAM or QPL must be completed prior to the material being used in the work.

Where the Contract Documents list products by specific name and model, and for which no additional requirements are stated (proprietary products), the Contractor needs only to complete the RAM indicating to the Engineer the intended choice. The Engineer shall approve the RAM, noting the page number where it is listed as a proprietary product in the Contract Documents.

Qualified Products List — Submittals

Products listed in the QPL have been found capable of meeting the requirements of the Standard Specification or General Special Provision under which they are listed and, therefore, have been "Approved." These may be "Accepted" by fulfilling the requirements of the Acceptance Code and any notes that apply to the product. Instructions are given in the QPL for processing QPL submittals. The Engineer shall review the submittal of the material for consistency with the Bid Item and shall promptly notify the Contractor of any concerns, working toward resolving these with the Contractor. QPL submittals inconsistent with the intended use for the Bid Item should be marked "unacceptable for intended use" and returned to the Contractor.

Request for Approval of Material — Submittals

Requests for materials not included in the QPL shall be submitted using the RAM form. Aggregate Sources will be approved by consulting the Aggregate Source Approval database for the use intended. Fabrication Facilities, Nurseries, and Concrete Batch Plant approvals will be determined by the use of other reference databases.

The Engineer may use the QPL as a reference source for coding products submitted on a RAM. The specific product listed on the RAM must be identified by make, model, batch, color, size, part no., etc. and correspond exactly to the approved QPL product. The product must also be listed in the QPL under the appropriate Standard Specification for the intended use as indicated by the Bid Item and Specification Reference shown on the RAM. The RAM should be coded with the 4 digit QPL code and any notes and/or restrictions restated as "Remarks" on the RAM.

Where the Special Provisions list the required material submittals necessary for acceptance, such as Manufacturer's Certification, Product Information Sheets, Shop Drawings, Independent Laboratory Test Data, etc., the Engineer shall have the authority to code the RAM for such acceptance actions.

When unable to determine the proper acceptance code as outlined above, the Engineer will code the items with a "7" and forward it to the FOSSC Materials Laboratory Documentation Section. A copy should also be returned to the Contractor at this point to inform him that the RAM has been sent to FOSSC. Attach all data submitted with the RAM; such as, Catalog Cuts, Manufacturer's Certificate of Compliance, etc. Including the page number of the Special Provisions or Plan Sheet will aid in expediting the Approval/Acceptance process.

All RAMs shall be signed and dated by the Engineer. Copies shall be distributed as indicated at the bottom of the form. Acceptance requirements should be noted on the maintained ROM or Materials Tracking system. When noted on the FOSSC approved RAM, copies of requested material documentation (i.e., Manufacturer's Certificate of Compliance, Mill Test Reports, Catalog Cuts, etc.) should be sent to the FOSSC Materials Laboratory, QPL Engineer, for possible inclusion on the QPL.

9-1.5C Vacant

9-1.5D Materials Fabrication Inspection Office — Inspected Items Acceptance

Items that are inspected and found to meet contract documents by the Materials Fabrication Inspection Office are identified by a tag or stamp. This type of inspection is generally performed at the manufacturing or fabrication plants. There are various types of stamps or tags used for acceptance of inspected items, which attest that the item was in full conformance with the specifications at the time of inspection. The inspected items along with the type of stamp designation is covered under Section 9-1.5D(1) of this manual.

The following is the process for the acceptance of inspected items.

1. The manufacturing or fabrication plant must be approved via the "Request for Approval of Material," (RAM) or the Qualified Products List (QPL)

2. The Materials Fabrication Inspection Office Inspector, who will obtain the necessary mill tests or other documentation from the manufacturer and reference them to the stamp or tag shown in Figures 9-3 through 9-7, must inspect the item of work. This number can be used for tracking of the item.

3. Once the fabricated item arrives on the job, check for approval stamp or tag.

   a. If there is an approval stamp or tag, record the type of tag or stamp along with the ID number when applicable, quantity, and brief description of the item for project records. The Project Engineer's representative should note in a report that the material was in satisfactory visual condition when installed and forward all information to the project office. In case of questions concerning an inspected item, contact the appropriate Materials Fabrication Inspection Office. The offices are:

      FOSSC Materials Laboratory, Tumwater, Mail Stop 47365

      Seattle Inspection Office, Mail Stop NB-82, Northwest, MS-501

      Spokane Inspection Office, Mail Stop Eastern, Materials Lab

      Vancouver Inspection Office, Mail Stop Southwest S-15, Materials Lab

   b. If there are no stamps or tags, inform the Contractor that the item may not be acceptable, and contact the Materials Fabrication Inspection Office to determine the status of the inspection. Items lacking tags or stamps or damaged during shipping should be rejected and tagged or marked appropriately.

9-1.5D(1) Inspected Items, Stamps and Tagging Identification

The following are examples of the types of stamps and tags used by the Materials Fabrication Inspection Office. The letter on the stamp or tag represents the inspector who performed the inspection.

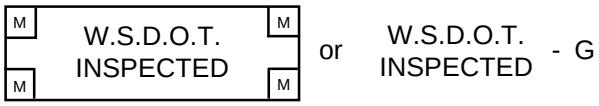

Stamps
Figure 9-3

The stamps shown in Figure 9-3 identifies inspection and the inspector of the following items:

1. Precast Concrete Barrier

2. Precast Concrete Catch Basins, Manholes and Inlets. This includes all sections and risers 6 inch and above.

3. Concrete Utility Vaults

4. Concrete Junction Boxes

5. Galvanized Steel

All Documentation associated with these stamps in Figure 9-3 will be reviewed and approved by the Materials Fabrication Inspection Office and kept at the point of Manufacture, with the exception that they will not track the quantities of foreign materials used on the project.

APPROVED
FOR SHIPMENT
WASH. DEPT. TRANSP.

N001234

Stamp
Figure 9-4

Tag
Figure 9-5

The stamp shown in Figure 9-4 or tag shown in Figure 9-5 identifies inspection and the inspector of the following items:

1. Concrete Wall Panels — Stamped or tagged

2. Three Sided Structures — Stamped or tagged

3. Prestressed Concrete Products — Stamped or tagged

4. Steel for Bridges — Stamped or tagged

5. Signal, Luminaire and Strain Poles — Stamped or tagged

6. Miscellaneous Welded Shop Items (see RAM or QPL for special items) — Stamped or tagged

7. Sign Structures — Stamped or tagged

8. Anchor Bolts for Luminaires, Signal Poles and Sign Structures

9. Epoxy Coated Reinforcing Steel Bars for Concrete — Bundles of rebar shall be randomly tagged per shipment to the project

10. Metal Bridge Rail — Each bundle of rail shall be tagged

11. Raised Pavement Markers, Type 1 (thermo-resin type only) – Each box of markers shall be stamped.

12. Concrete Culvert, Sewer Pipe (30 inches (750 mm) and above) — Stamped

All Documentation associated with the stamp in Figure 9-4 or the tag in Figure 9-5 will be reviewed and approved by the Materials Fabrication Inspection Office and kept at the point of Manufacture, with the exception that they will not track the quantities of foreign materials used on the project.

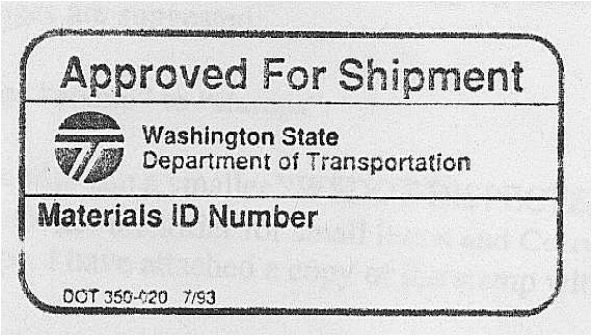

Tag
Figure 9-6

The tag in Figure 9-6 identifies inspection and inspector of Treated Timber, Piling and Poles

1. Bundles of treated timber shall be randomly tagged "Approved for Shipment" referencing the inspector's identification number.

2. Treated Piling and Poles shall be individually tagged "Approved for Shipment" referencing the inspector's identification number.

All Documentation associated with the tag in Figure 9-6 will be reviewed and approved by the Materials Fabrication Inspection Office and kept at the Materials Fabrication Inspection Office.

WSDOT-A

Stamp
Figure 9-7

The stamp shown in Figure 9-7 identifies inspection and inspector of the following items:

(This stamp is impressed on the casting and will be circled with spray paint for ease of visibility of the stamp.)

1. Gray-Iron Castings, Steel Castings, Ductile-Iron Castings — Stamped

2. Standard Plan B-2a and B-2b Frames and Grates — Each set shall be stamped aligning the adjacent mating surfaces to each other. This alignment is critical as the leveling pads are ground to prevent rocking of the grates in the frames.

All Documentation associated with the stamp in Figure 9-7 will be reviewed and approved by the Materials Fabrication Inspection Office and kept at the Materials Fabrication Inspection Office, with the exception that they will not track the quantities of foreign materials used on the project.

9-1.5E Manufacturer's Certificate of Compliance

As designated by the specifications and contract special provisions, certain materials may be accepted on the basis of a Manufacturer's Certificate of Compliance. This acceptance is an alternate to job site sampling and testing. The Record of Material should indicate the required sampling and testing and provide a guide to the items for which a compliance certification is an acceptable basis of acceptance. The Manufacturer's Certificate of Compliance is required prior to installation of the material. See Section 1-2.8C(3) of this manual for guidance on allowing material to be placed without certification.

Acceptance by Manufacturer's Certificate of Compliance will be permitted where designated by the contract documents. The Record of Material will provide a summary of requirements combining the special as well as general requirements of the contract.

The form of the Manufacturer's Certificate of Compliance will vary considerably based on both the material and the origin and may take the form of standard state certificate forms, individual letters from manufacturers, or overstamps on bills of lading. Certain information is required and is designated by the specifications. This information includes the identity of the manufacturer, the type and quantity of material being certified, the applicable specifications being affirmed, and the signature of a responsible representative of the manufacturer. Supporting mill tests or documents may also be required. A Manufacturer's Certificate of

Compliance is required for each delivery of material to the project and the lot number of material being certified shall be identified.

Upon receipt of the Manufacturer's Certificate of Compliance at the project office, it shall be reviewed for compliance with the specifications requirements using the preceding guidelines and the checklist for Transmittal of Manufacturer's Certificate of Compliance Form 350-572. The manufacturer of the material must make the certification. A supplier certificate is not acceptable except as evidence for lot number and quantity shipped and can only be accepted when accompanied by a certificate from the manufacturer, which meets the requirements of Section 1-06.3 of the *Standard Specifications*.

9-1.5F Concrete Pipe Acceptance Report

Fabrication inspection is periodically performed at approved sources of concrete pipe. During this inspection, samples of each type, size, and class of pipe are inspected and tested to verify compliance with the *Standard Specifications*. For a 90-day period of manufacture from the date of inspection, concrete pipe less than 30 inches (750 mm) diameter may be shipped and accepted based on "Concrete Pipe Acceptance Reports." This report is prepared by the Fabrication Inspector and copies are thereafter supplied by the fabricator to accompany each shipment of pipe.

The Acceptance Report will indicate the date and original test results as performed by the Fabrication Inspector and will bear appropriate certification from the fabricator. Verify the conformance of the shipment with the contract requirements and examine the manufacture and shipping dates of the pipe for conformance with specifications and with the Acceptance Report.

9-1.5G Sign Acceptance Report

The Sign Acceptance Report (SAR) is prepared by the Sign Fabricator Inspector to verify that signs for an individual contract were inspected and approved for shipment to the project by having a "**FABRICATION APPROVED**" decal, see Figure 9-8.

Figure 9-8

1. Pre-approval of the Sign Fabricator is required by the Field Operations Support Service Center, Traffic Operations Office. The Sign Fabricator is approved via inclusion in the Qualified Products List or forward of the original Request for Approval of Material to the FOSSC Materials Laboratory for approval (DOT Form 350-071).

2. After the Sign Fabricator is selected, the Engineer will notify the appropriate Sign Fabrication Inspector of the need to provide sign fabrication inspection and provide the inspector with a detailed list of the types of signing materials intended for use on a specific project. The form letter attached to the Record of Material may be used to notify the Sign Fabrication Inspectors.

Sign Fabrication Inspectors

Tacoma area — Contact the Field Operations Support Service Center, Traffic Operations Office, Mail Stop 47344, (360) 705-7293 or (360) 705-7988

Seattle area — Contact Northwest Region Traffic Office, Mail Stop NB82/120, (206) 440-4455

Vancouver-Portland area — Contact Southwest Region Traffic Office, Mail Stop S-15, (360) 905-2260

Spokane-Eastern Washington area — Contact Eastern Region Materials, Spokane, (509) 324-6169

Yakima area — Contact South Central Region Central Sign Shop, Union Gap, (509) 575-2569

Sign Inspection documentation requirements:

1. Sign blanks or panels: Manufacturer's Certificate of Compliance with accompanying mill certifications. A copy of the Certificates will accompany the SAR.

2. Reflective Sheeting and Cutout Legend: Manufacturer's Certificate of Compliance, this certificate will verify that the product(s) meets all the requirements of Standard Specification 9-28.12. A copy of the Manufacturer's Certificate of Compliance will be kept at the point of Sign Fabrication.

3. Demountable Legend and Prismatic Reflectors: Manufacturer's Certificate of Compliance, this certificate will verify that the product(s) meets all the requirements of Standard Specification 9-28.13. A copy of the Manufacturer's Certificate of Compliance will be kept at the point of Sign Fabrication.

The SAR, which will include date of sign fabrication inspection, and an itemized list of all signs inspected, will be sent to the Project Engineer after all the signs have been inspected and approved for shipment.

The Project Engineer Representative will accept for installation and payment only those signs which have a "**FABRICATION APPROVED**" decal affixed. Double faced signs, which do not receive decals, will be approved on the itemized list in the SAR.

In the event there is no "**FABRICATION APPROVED**" decals on the signs, they may be rejected. Contact the appropriate Sign Fabricator Inspector for status, or have the Contractor ship the signs back to Sign Fabricator, if this does not delay the project.

The SAR provided by the Sign Fabricator Inspector will complete the documentation certifying the signing materials as to specification conformance.

9-1.6 Control of Materials

The succeeding parts of this chapter on materials outline the detailed method to be used in the control of materials. The expenditure made for materials is a large item in construction costs. If faulty materials are permitted to be incorporated into the project, the cost of replacement may exceed the original cost.

Chapter 9-4, Specific Requirements for each type of material, includes the following information:

1. Approval of Material
2. Preliminary Samples
3. Acceptance Samples
4. Field Inspection
5. Specification Requirements

Chapter 9-5, Guidelines for Job Site Control of Materials, provides the Engineer with additional information to assist in determination of the point of acceptance for materials from WSDOT and Contractor sources, the basis of acceptance, verification sampling and testing, tolerance limits, and the sampling and testing frequency guide.

Chapter 9-6, Radioactive Testing Devices, explains policy on the administration of radioactive testing devices.

Chapter 9-8, WSDOT Test Methods/Field Operating Procedures, are the testing procedures that are used in the field.

9-2 Vacant

9-3 Vacant

9-4 Specific Requirements for Each Material

Section Number	Specific Requirements for Each Material Alphabetical Listing	Page Number
9-4.58	Admixtures for Concrete	9-29
9-4.6	Aggregates for Asphalt Concrete and Asphalt Treated Base	9-13
9-4.25	Anchor Bolts	9-19
9-4.67	Anchor Bolts for Luminaires, Signal Poles, and Sign Structures	9-31
9-4.7	Asphalt Concrete and Asphalt Treated Base	9-13
9-4.51	Beam Guardrail, Guardrail Anchors and Glare Screen	9-27
9-4.2	Bituminous Materials	9-11
9-4.32	Bridge Approach Slab Anchors	9-21
9-4.76	Concrete	9-34
9-4.4	Concrete Aggregates	9-12
9-4.16	Concrete Culvert, Sewer, Drain, and Underdrain Pipe	9-16
9-4.57	Concrete Curing Compounds	9-28
9-4.64	Conduit	9-30
9-4.75	Construction Geotextiles	9-34
9-4.79	Controller Cabinet Assembly	9-35
9-4.30	Dowels and Tiebars for Concrete Pavement incl. Epoxy Coated	9-20
9-4.70	Elastomeric Bearing Pads	9-33
9-4.13	Elastomeric Compression Seals	9-15
9-4.65	Electrical Conductors	9-31
9-4.27	Epoxy Coated Reinforcing Steel Bars for Concrete	9-20
9-4.60	Epoxy Resins	9-29
9-4.78	Expansion Joints	9-35
9-4.71	Fabric Pad Bearings	9-33
9-4.50	Fencing	9-26
9-4.47	Fertilizer	9-25
9-4.62	Gabion Baskets	9-30
9-4.17	Galvanized Steel, Aluminized Steel and Aluminum Corrugated Metal Culvert, Drain Pipe and Perforated Underdrain Pipe	9-16
9-4.9	Gravel Base and Bank Run Gravel for Trench Backfill	9-14
9-4.20	Gray-Iron Castings, Steel Castings, Ductile-Iron Castings (Catch Basin Frames and Grates, Manhole Rings and Covers, Monument Case and Cover, etc)	9-17
9-4.52	Guardrail Posts and Blocks	9-27
9-4.24	High Strength Bolts, Nuts and Washers	9-19
9-4.40	Hollow Steel Piling and Jack Casing	9-23
9-4.3	Hot Melt Traffic Button Adhesive	9-12
9-4.15	Hot Poured Joint Sealant	9-15
9-4.49	Irrigation System	9-26
9-4.68	Luminaries and Lamps	9-32
9-4.28	Mechanical Splices	9-20
9-4.74	Metal Bridge Rail	9-34
9-4.8	Mineral Filler	9-14
9-4.53	Miscellaneous Precast Concrete Products (Block Traffic Curb, Precast Traffic Curb)	9-27
9-4.48	Mulch	9-25
9-4.35	Paints for Structures	9-22
9-4.18	Perforated Underdrain Pipe	9-17
9-4.38	Piling — Untreated	9-23
9-4.10	Pit Run Aggregates (Gravel Backfill for Foundation CL. B, Walls, Pipe Zone Bedding, Drains and Drywells; Backfill for Sand Drains, Sand Drainage Blanket, Bedding Material for Rigid Pipe, Thermoplastic Pipe; Foundation Material Class A, B, and C, Gravel Borrow, Common Borrow, Select Borrow)	9-14
9-4.44	Plant Material	9-24
9-4.59	Plastic Waterstop	9-29
9-4.1	Portland Cement or Blended Hydraulic Cement	9-11
9-4.72	Precast Concrete Barrier and Wall Panels	9-33
9-4.41	Precast Concrete Catch Basins, Manholes and Inlets	9-23
9-4.12	Premolded Joint Filler	9-15
9-4.54	Prestressed Concrete Products	9-28

9-4.34	Prestressing/Post Tensioning Reinforcement — Bar	9-21
9-4.33	Prestressing/Post Tensioning Reinforcement — Strand	9-21
9-4.55	Raised Pavement Markers, Types 1, 2 and 3	9-28
9-4.29	Rebar Chairs, Dobies and Spacers	9-20
9-4.26	Reinforcing Bars for Concrete	9-19
9-4.61	Resin Bonded Anchors	9-29
9-4.42	Riprap, Quarry Spalls, Slope Protection, and Rock Wall	9-23
9-4.73	Safety Bars, Cattle Guards. Sign Mounting Brackets, Steel and Special Guardrail Posts, Steel Sign Posts	9-34
9-4.21	Sanitary Sewers	9-18
9-4.46	Seed	9-25
9-4.43	Semi-Open Slope Protection	9-24
9-4.63	Sign Structures	9-30
9-4.66	Signal, Luminaire and Strain Poles	9-31
9-4.56	Signing Materials	9-28
9-4.22	Steel for Bridges	9-18
9-4.39	Steel H-Piling	9-23
9-4.19	Structural Plate Pipes and Arches	9-17
9-4.36	Structural Timber and Lumber — Untreated	9-22
9-4.5	Surfacing Aggregates (Crushed Screening, Crushed Cover Stone, Ballast, Shoulder Ballast, Crushed Surfacing Base and Top Course)	9-13
9-4.45	Topsoil Type A	9-24
9-4.37	Treated Timber and Piling	9-22
9-4.14	Two Component Poured Rubber Joint Sealer	9-15
9-4.23	Unfinished Bolts (Ordinary Machine Bolts), Nuts and Washers	9-19
9-4.69	Water Distribution System	9-32
9-4.77	Water for Concrete	9-35
9-4.31	Wire Reinforcement for Concrete	9-21

9-4.1 Portland Cement or Blended Hydraulic Cement

1. Approval of Material: Approval of materials is required prior to use. This approval may either be by virtue of the inclusion of this material/product on the Qualified Products List or by approval of a Request for Approval of Material (DOT Form 350-071). If approval is by means of QPL, be certain to verify that product is in fact qualified for its intended use, product is listed under appropriate specification.

2. Preliminary Samples: Preliminary samples will be required only if requested on Request for Approval of Material (DOT Form 350-071).

3. Acceptance/Verification

a. Acceptance

(1) Bulk Cement: Bulk cement will be accepted upon receipt of a Manufacturer's Mill Test Report Number, which shall be reported on each certified concrete delivery ticket.

(2) Bagged Cement: If the quantity of bagged cement exceeds 400 bags, then it will be accepted by "SATISFACTORY" test reports from the FOSSC Materials Laboratory. If a sample is needed, acquire a 10-pound (5-kilogram) sample from one of every 400 bags and ship to the FOSSC Materials Laboratory for testing. Allow a minimum of 14 days from receipt of the sample at the Laboratory for testing. DO NOT permit the use of bagged cement until a "SATISFACTORY" test report has been received from the FOSSC Materials Laboratory.

b. Verification: Manufacturing mills will provide samples directly to the FOSSC Materials Laboratory on a quarterly basis to compare with the manufacturing mill test report. The Engineer may take samples for testing as described in *Standard Specifications* Section 9-01.3.

4. Verify the materials received on the job site, is in fact the same make, model, lot, batch, size, color, blend, etc., as approved for use, be it by QPL or via the Request for Approval of Material (DOT Form 350-071).

5. Specification Requirements: See *Standard Specifications* Section 9-01. Review contract documents to determine if supplemental specifications apply.

9-4.2 Bituminous Materials

1. Approval of Material: Approval of the materials are required prior to use. This approval may either be by virtue of the inclusion of this material/product on the Qualified Products List or by approval of a Request for Approval of Material (DOT Form 350-071). If approval is by means of QPL, be certain to verify that product is in fact qualified for its intended use, product is listed under appropriate specification.

2. Preliminary Samples: A preliminary sample of the material will be required only if requested on Request for Approval of Material (DOT Form 350-071). A preliminary sample consists of two (2) one-liter (1-quart) cans.

3. Acceptance/Verification

a. Acceptance: Bituminous materials may be used after receipt by the Engineer of Asphalt Supplier's Certification of Compliance incorporated in their Bill of Lading with the information required by the *Standard Specifications 9-02*. Examine these certificates to make sure the material is of the grade required and that it comes from the approved supplier and point of shipment.

b. Verification: Samples for verification conformance will be taken based on the frequencies as stated in Section 9.5-7 of this manual. Because the entire sample may be used in testing, it is necessary to take a backup for each sample. The samples shall be taken and labeled in duplicate by the Engineer with both samples forwarded promptly to the FOSSC Materials Laboratory. Paving asphalt's (PG, AR, PBA, AC, and RA grades) shall be taken at a frequency corresponding to every other ACP mix acceptance sample. The first,

third, fifth, and every fifth sample thereafter will be tested. Emulsions and cutbacks (such as MC and RC grades), shall be sampled from every other shipment. Emulsion used exclusively for tack coat (such as STE-1 and CSS-1), do not require sampling.

Consult the FOP for AASHTO T40 for detailed sampling procedures. Samples shall be taken as close as possible to the point where the material is to be used; i.e., pug mill, distributor, etc. In the case of cutback asphalt's, sampling may be from the distributor itself, by opening a valve or one of the nozzles. If a hand nozzle is available, the sample may be drawn off there. Paving asphalt for use in a plant should be sampled by drawing from either the supply line between the storage tank and the mixer or the storage tank. Specifications require the Contractor to install a valve for this purpose.

If samples cannot be taken from the distributor, as outlined above, they may be taken from the storage tank. Samples taken directly from storage tanks must be taken with a "thief," so that they do not include surface material and are from near the middle of the asphalt in storage. They may be taken by the grab method — that is, the full amount of the sample will be taken at one time or at one spot in the car.

Samples of emulsified asphalt shall be taken as close as possible to the location the materials are used, but they must be taken before any dilution of the material takes place.

The containers for all liquid asphalt products except emulsions will be approximately 1 quart (1 liter) cans with 1 3/4-inch (44-mm) screw caps. Containers for emulsions shall be 1 quart (1 liter) plastic. Always use new, clean containers that are free of rust, dents, or other weaknesses that may cause leaking or contamination. Containers previously used for any other purpose will not be satisfactory regardless of how well cleaned they are considered to be. The outside of the containers must not be cleaned by immersion in kerosene or other solvent because of the danger of contaminating the sample. Containers must not be cooled by immersion in water or other liquid as contraction may draw contaminants into sample. Enter complete data on gummed label DOT Form 350-016 and attach to each of the two cans. Complete a Sample Transmittal (DOT Form 350-056) and attach it, in its envelope, to the container. If tape is used to attach envelope to container, or the containers together, be sure the tape is not contacting the label(s).

4. Field Inspection: Check the "Bill of Lading" that the liquid asphalt delivered complies with the requirements of the approved mix design. Check temperature to which material is heated to make sure specified limits are not exceeded, see *Standard Specification 9-02.3*.

5. Specification Requirements: See *Standard Specifications* Section 9-02. Review contract documents to determine if supplemental specifications apply. In addition, refer to project mix design.

9-4.3 Hot Melt Traffic Button Adhesive

1. Approval of Material: Approval of materials is required prior to use. This approval may either be by virtue of the inclusion of this material/product on the Qualified Products List or by approval of a Request for Approval of Material (DOT Form 350-071). If approval is by means of QPL, be certain to verify that product is in fact qualified for its intended use, product is listed under appropriate specification.

2. Preliminary Samples: A preliminary sample of the material will be required only if requested on Request for Approval of Material (DOT Form 350-071). Submit Manufacturers Certificate of Compliance meeting the requirements of *Standard Specifications* Section 1-06.3, including supporting tests reports to FOSSC Materials Laboratory for evaluation.

3. Acceptance/Verification

   a. Acceptance: Verify the materials received on the job site, is in fact the same make, model, lot, batch, size, color, blend, etc. as approved for use, be it by QPL or via the Request for Approval of Material (DOT Form 350-071).

   b. Verification: Submit a sample of each lot of material to the FOSSC Materials Laboratory for testing.

4. Field Inspection: Verify correct heating of product per manufacturers recommendations.

5. Specification Requirements: See *Standard Specifications* Section 9-02.1(8). Review contract documents to determine if supplemental specifications apply.

9-4.4 Concrete Aggregates

1. Approval of Material: Consult the Aggregate Sources Approval (ASA) database for approval of material for each source prior to use.

2. Preliminary Samples: A preliminary sample of the material will be required only if requested on the Request for Approval of Material (DOT Form 350-071) or if the ASA database indicated that the aggregate source has expired. Contact the Regional Materials Office if preliminary samples are required. Preliminary samples for Concrete Aggregate shall be made up of 50-100 pounds (25-50 kilograms) of clean, washed coarse aggregate and 20-25 pounds (10-13 kilograms) of clean washed fine aggregate. The sample is to be shipped in increments, using satisfactory containers, not exceeding 30 pounds (15 kilograms).

3. Acceptance: After the source has been approved, concrete aggregates may be accepted upon satisfactory field tests for grading, cleanliness and free from excessive organic matter, silt, and soft or foreign pieces. Acceptance samples shall be obtained, tested, and recorded in accordance with the *Standard Specifications* Section 9-03.1, the contract special provisions, and Chapters 9-5.7, and 10-3.14A of this manual.

4. Field Inspection: See Chapters 9-8 for Sampling Methods and Testing Procedures. Discuss test results with the Contractor's representative. Enforce provisions of the *Standard Specifications* regarding stockpiling.

5. Specification Requirements: See *Standard Specifications* Section 3-02 and 9-03.1. Review contract documents to determine if supplemental specifications apply.

9-4.5 Surfacing Aggregates (Crushed Screening, Crushed Cover Stone, Ballast, Shoulder Ballast, Crushed Surfacing Base and Top Course)

1. Approval of Material: Consult the Aggregate Sources Approval (ASA) database for approval of material for each source prior to use.

2. Preliminary Samples: A preliminary sample of the material will be required only if requested on the Request for Approval of Material (DOT Form 350-071) or if the ASA database indicated that the aggregate source has expired. Contact the Regional Materials Office if preliminary samples are required. Preliminary samples for Surfacing Aggregate made up of 80-120 pounds (35-55 kilograms) are required to perform the qualifying tests. The sample is to be shipped in increments, using satisfactory containers, not exceeding 30 pounds (15 kilograms).

3. Acceptance: After the source has been approved, surfacing aggregates may be accepted upon satisfactory field tests. Acceptance samples shall be obtained, tested, and recorded in accordance with the contract special provisions, and Chapters 9-5.7, 9-8, and 10-3.14A of this manual.

4. Field Inspection: See Chapters 9-8 for Sampling Methods and Testing Procedures. Discuss test results with the Contractor's representative. Enforce provisions of the *Standard Specifications* regarding stockpiling.

5. Specification Requirements: See *Standard Specifications* Sections 3-02, 9-03.4, and 9-03.9. Review contract documents to determine if supplemental specifications apply.

9-4.6 Aggregates for Asphalt Concrete and Asphalt Treated Base

1. Approval of Material: Consult the Aggregate Sources Approval (ASA) database for approval of material for each source prior to use.

2. Preliminary Samples

   a. Preliminary Samples: A preliminary sample of the material will be required only if requested on the Request for Approval of Material (DOT Form 350-071) or if the ASA database indicated that the aggregate source has expired. Contact the Regional Materials Office if preliminary samples are required. Preliminary samples for the aggregate shall be made up of 80-120 pounds (35-55 kilograms) as required to perform the quality tests. The sample is to be shipped in increments, using satisfactory containers, not exceeding 30 pounds (15 kilograms).

   b. Preliminary Mix Design Samples: These samples are used to determine if the aggregate source is capable of meeting the mix design specification requirements. Preliminary samples shall be made up of 200 pounds (100 kilograms) of rock or pit run gravel and 25 pounds (10 kilograms) of blend sand if utilized. Contact the Regional Materials Office if preliminary samples are required. Give full details of type of construction proposed. The sample is to be shipped in increments, using satisfactory containers, not exceeding 30 pounds (15 kilograms).

3. Acceptance: After the source has been approved, the aggregates may be accepted upon satisfactory field tests. Acceptance samples shall be obtained, tested, and recorded in accordance with the *Standard Specifications*, the contract special provisions, and Chapters 9-5.7, 9-8 and 10-3.14A of this manual. Aggregates produced for use on the current contract shall be sampled and tested for fracture and sand equivalent as the material is placed into stockpile. When material is used from a stockpile that has not been tested as provided above, the requirements for fracture and sand equivalent shall apply at the time of its introduction to the cold feed of the mixing plant. Acceptance of the aggregate for gradation shall be based on samples taken from the Hot Mix Asphalt.

If the aggregates are being produced for use on a future contract, they shall be sampled and tested for gradation as well as fracture and sand equivalent at the time the material is placed in stockpile.

4. Field Inspection: See Chapters 9-8 for Sampling Methods and Testing Procedures. Discuss test results with the Contractor's representative. Enforce provisions of the *Standard Specifications* regarding stockpiling.

5. Specification Requirements: See *Standard Specifications* Sections 3-02, 9-03.6 and 9-03.8. Review contract documents to determine if supplemental specifications apply.

9-4.7 Asphalt Concrete and Asphalt Treated Base

1. Approval of Material: Approval of the materials for asphalt concrete and asphalt treated base are required prior to use.

A current approved mix design is required for each contract. An approved mix design is only valid for a single construction season.

   a. Job Mix Design: Send 200 pounds (100 kilograms) of aggregate from each coarse stockpile (1/4 inch (6.3 mm) and larger), 100 pounds (50 kilograms) of aggregate from each fine stockpile (smaller than 1/4 inch (6.3 mm)), and 50 pounds (25 kilograms) of blend sand if utilized to the FOSSC Materials Laboratory for testing. The sample is to be shipped in increments, using satisfactory containers, not exceeding 30 pounds (15 kilograms).

   The aggregate samples must be accompanied by completed sample transmittals from the Project Engineer and the contractor's proposal containing the following data: individual stockpile average

gradations, proposed combining ratios of aggregate stockpiles, which when calculated will reflect the proposed gradation of the completed mix. Also include the asphalt supplier(s) and grade of the asphalt cement.

b. Reference Mix Design: A reference mix design can be used if there is a current valid mix design previously developed using the same materials and JMF as the one proposed. Contact the FOSSC Materials Laboratory, Bituminous Section for availability.

2. Preliminary Samples: Not required.

3. Acceptance: After the sources have been approved, the aggregates may be accepted upon satisfactory field tests, for gradation and asphalt content. Acceptance samples shall be obtained, tested, and recorded in accordance with the *Standard Specifications*, the contract special provisions, and Chapters 9-5.7, 9-8 and 10-3.14A of this manual. The sampling will be on a random basis using the procedures shown in WSDOT Test Method 716. The sampling and testing frequency for each lot is indicated in Chapter 9-5.7.

4. Field Inspection: The Engineer should perform a plant inspection prior to production. Contact the Regional Materials Office for assistance with this inspection. See Chapters 9-8 for Sampling Methods and Testing Procedures. Discuss test results with the Contractor's representative.

5. Specification Requirements: See *Standard Specifications* Sections 5-04, 9-03.6, and 9-03.8. Review contract documents to determine if supplemental specifications apply.

9-4.8 Mineral Filler

1. Approval of Material: Approval of the materials is required prior to use. This approval may either be by virtue of the inclusion of this material/product on the Qualified Products List or by approval of a Request for Approval of Material (DOT Form 350-071). If approval is by means of QPL, be certain to verify that product is in fact qualified for its intended use, product is listed under appropriate specification.

2. Preliminary Sample: A preliminary sample of the material will be required only if requested on Request for Approval of Material (DOT Form 350-071). Ship 3 pounds (1.5 kilograms) in polyethylene bag.

3. Acceptance: Acceptance of mineral filler (commercial stone dust) shall be based on "SATISFACTORY" laboratory tests only for each lot of 50 tons (tonnes) or less. Portland cement may be accepted without test if it is furnished in original factory sacks and is not lumpy.

4. Field Inspection: Verify the materials received on the job site, is in fact the same make, model, lot, batch, size, color, blend, etc. as approved for use, be it by QPL or via the Request for Approval of Material (DOT Form 350-071). See that the mineral filler does not contain foreign material or lumps.

5. Specification Requirements: See *Standard Specifications* Section 9-03.8(5). Review contract documents to determine if supplemental specifications apply.

9-4.9 Gravel Base and Bank Run Gravel for Trench Backfill

1. Approval of Material: Consult the Aggregate Sources Approval (ASA) database for approval of material for each source prior to use.

2. Preliminary Samples: A preliminary sample of the material will be required only if requested on the Request for Approval of Material (DOT Form 350-071) or if the ASA database indicated that the aggregate source has expired. Contact the Regional Materials Office if preliminary samples are required. Preliminary samples for the aggregate shall be made up of 50-100 pounds (25-50 kilograms) are required to perform the quality tests. The sample is to be shipped in increments, using satisfactory containers, not exceeding 30 pounds (15 kilograms).

3. Acceptance: After the source has been approved, the aggregates may be accepted upon satisfactory field tests. Acceptance samples shall be obtained, tested, and recorded in accordance with the *Standard Specifications*, the contract special provisions, and Chapters 9-5.7, 9-8 and 10-3.14A of this manual.

4. Field Inspection: See Chapters 9-8 for Sampling Methods and Testing Procedures. Discuss test results with the Contractor's representative. Enforce provisions of the *Standard Specifications* regarding stockpiling.

5. Specification Requirements: See *Standard Specifications* Section 3-02, 9-03. Review contract documents to determine if supplemental specifications apply.

9-4.10 Pit Run Aggregates (Gravel Backfill for Foundation CL. B, Walls, Pipe Zone Bedding, Drains and Drywells; Backfill for Sand Drains, Sand Drainage Blanket, Bedding Material for Rigid Pipe, Thermoplastic Pipe; Foundation Material Class A, B, and C, Gravel Borrow, Common Borrow, Select Borrow)

1. Approval of Material: Consult the Aggregate Sources Approval (ASA) database for approval of material for each source prior to use. For Borrow sources, approval of source can be performed in the field by conforming that the gradation and SE meets the requirements as defined in Section 9-03 of the *Stand Specifications*.

2. Preliminary Samples: A preliminary sample of the material will be required only if requested on the Request for Approval of Material (DOT Form 350-071) or if the ASA database indicated that the aggregate source has expired. Contact the Regional Materials Office if preliminary samples are required. Preliminary samples for the aggregate shall be made up of 80-120 pounds 0(33-55 kilograms) are required to perform the quality tests. The sample is to be shipped in increments, using satisfactory containers, not exceeding 30 pounds (15 kilograms).

3. Acceptance: After the source has been approved, and prior to use, the gradation and SE tests shall be performed to determine if the material does in fact meet specifications for intended use. The aggregates may be accepted upon

satisfactory field tests. Acceptance samples shall be obtained, tested, and recorded in accordance with the *Standard Specifications*, the contract special provisions, and Chapters 9-5.7, 9-8 and 10-3.14A of this manual.

4. Field Inspection: See Chapters 9-8 for Sampling Methods and Testing Procedures. Discuss test results with the Contractor's representative. Enforce provisions of the *Standard Specifications* regarding stockpiling.

5. Specification Requirements: See *Standard Specifications* Section 3-02, 9-03. Review contract documents to determine if supplemental specifications apply.

9-4.11 Vacant

9-4.12 Premolded Joint Filler

1. Approval of Material: Approval of materials is required prior to use. This approval may either be by virtue of the inclusion of this material/product on the Qualified Products List or by approval of a Request for Approval of Material (DOT Form 350-071). If approval is by means of QPL, be certain to verify that product is in fact qualified for its intended use, product is listed under appropriate specification.

2. Preliminary Samples: If a preliminary sample is required, it shall consist of a 1 square foot (300 mm^2) section from each lot of material used. Submit sample to FOSSC Materials laboratory for testing. If the lot can be identified and proven to have prior satisfactory acceptance test results, it may be used without testing on current projects.

3. Acceptance: Materials shall be accepted on receipt of "SATISFACTORY" test reports from the FOSSC Materials Laboratory. If the lot can be identified and proven to have prior satisfactory acceptance test results, it may be used without testing on current projects.

4. Field Inspection: Check for accuracy in cutting, stapling, and care in handling. Verify the materials received on the job site, is in fact the same make, model, lot, batch, size, color, blend, etc. as approved for use, be it by QPL or via the Request for Approval of Material (DOT Form 350-071).

5. Specification Requirements: See *Standard Specifications* Section 9-04.1. Review contract documents to determine if supplemental specifications apply.

9-4.13 Elastomeric Compression Seals

1. Approval of Material: Approval of materials is required prior to use. This approval may either be by virtue of the inclusion of this material/product on the Qualified Products List or by approval of a Request for Approval of Material (DOT Form 350-071). If approval is by means of QPL, be certain to verify that product is in fact qualified for its intended use, product is listed under appropriate specification.

2. Preliminary Samples: If a preliminary sample is required, it shall consist of a 2 feet (0.6 meters) section from each lot of material used. Submit sample to FOSSC Materials laboratory for testing. If the lot can be identified and proven to have prior satisfactory acceptance test results, it may be used without testing on current projects.

3. Acceptance: The material/product may be accepted on a "SATISFACTORY" test report from FOSSC Materials Laboratory. If the lot can be identified and proven to have prior satisfactory acceptance test results, it may be used without testing on current projects.

4. Field Inspection: Verify the materials received on the job site, is in fact the same make, model, lot, batch, size, color, blend, etc. as approved for use, be it by QPL or via the Request for Approval of Material (DOT Form 350-071).

5. Specification Requirements: See *Standard Specifications* Section 9-04.1. Review contract documents to determine if supplemental specifications apply.

9-4.14 Two Component Poured Rubber Joint Sealer

1. Approval of Material: Approval of materials is required prior to use. This approval may either be by virtue of the inclusion of this material/product on the Qualified Products List or by approval of a Request for Approval of Material (DOT Form 350-071). If approval is by means of QPL, be certain to verify that product is in fact qualified for its intended use, product is listed under appropriate specification.

2. Preliminary Samples: If a preliminary sample is required, it shall consist of an unopened container of each component from each lot of material used unless specifically exempted by the FOSSC Materials Laboratory. Submit sample to FOSSC Materials Laboratory for testing. If the lot can be identified and proven to have prior satisfactory acceptance test results, it may be used without testing on current projects.

3. Acceptance: Material shall be accepted on "Satisfactory" test report or lot approval by the FOSSC Materials Laboratory.

4. Field Inspection: Make certain that application is in accordance with requirements of *Standard Specifications* and manufacturer's written recommendations. In order to obtain satisfactory adhesion of the sealer, joints must be thoroughly cleaned before the sealer is applied. Verify the material received on the job site, is in fact the same make, model, lot, batch, size, color, blend, etc. as approved for use, be it by QPL or via the Request for Approval of Material (DOT Form 350-071).

5. Specification Requirements: See *Standard Specifications* Section 9-04.2(2). Review contract documents to determine if supplemental specifications apply.

9-4.15 Hot Poured Joint Sealant

1. Approval of Material: Approval of materials is required prior to use. This approval may either be by virtue of the inclusion of this material/product on the Qualified Products List or by approval of a Request for Approval of Material (DOT Form 350-071). If approval is by means of QPL, be certain to verify that product is in fact qualified

for it's intended use, product is listed under appropriate specification, and a "SATISFACTORY" test report from FOSSC Materials Laboratory prior to use.

2. Preliminary Samples: If a preliminary sample is required, submit one box sample to the FOSSC Materials Laboratory for testing.

3. Acceptance: The material/product shall be accepted on a "SATISFACTORY" test report from FOSSC Materials Laboratory. If the lot can be identified and proven to have prior satisfactory acceptance test results, it may be used without testing on current projects.

4. Field Inspection: Ensure that application is in accordance with requirements of the *Standard Specifications* Section 5-04.3(5C), 5-05.3(8)B and the manufacturer's recommendation. Verify the materials received on the job site, is in fact the same make, model, lot, batch, size, color, blend, etc. as approved for use, be it by QPL or via the Request for Approval of Material (DOT Form 350-071).

5. Specification Requirements: See *Standard Specifications* Section 9-04.2(1). Review contract documents to determine if supplemental specifications apply.

9-4.16 Concrete Culvert, Sewer, Drain, and Underdrain Pipe

1. Approval of Material: Approval of manufacturer is required prior to use. This approval may either be by virtue of the inclusion of this material/product on the Qualified Products List or by approval of a Request for Approval of Material (DOT Form 350-071). Notify Materials Fabrication Inspection Office of need to approve fabricator and provide Inspection Services. If approval is by means of QPL, be certain to verify that product is in fact qualified for its intended use, product is listed under appropriate specification.

2. Preliminary Samples: A preliminary sample of the material will be required only if requested on Request for Approval of Material (DOT Form 350-071).

3. Acceptance:

a. Concrete pipe less than 30 inches (750 millimeters) in diameter will be accepted based on "Concrete Pipe Acceptance Reports" which shall accompany the pipe to the job. Individual pipes are not stamped.

b. Concrete pipe 30 inches (750 millimeters) in diameter and larger are individually inspected at the plant prior to shipment. Accepted pipe will be stamped "APPROVED FOR SHIPMENT" with ID number (Figure 9-5) on each piece of pipe, numbers repeated per inspection visit, number will differ for different diameters.

4. Field Inspection:

a. Concrete pipe less than 30 inches (750 millimeters) in diameter:

(1) Verify that the "Concrete Pipe Acceptance Report" is current and covers the diameter quantity and class of pipe delivered.

(2) Inspect the manufacture date marked in each pipe to verify that it was made within the period covered by the Inspection Report. Also verify that shipment was made after the required retention time. *Standard Specifications* require 28 days for pipe using Type II cement and seven days for pipe using Type III cement. If tested and accepted at an earlier age these requirements may be modified.

(3) Verify that the pipe is free from damage from handling and shipping.

(4) Concrete sewer pipe requires testing after installation in conformance with the *Standard Specifications* Section 7-04.3.

(5) Complete the upper portion of the "Concrete Pipe Acceptance Report" and forward to the contract files.

b. Concrete pipe 30 inches (750 millimeters) in diameter and larger:

(1) Verify that each pipe in the shipment is stamped "APPROVED FOR SHIPMENT." Only properly stamped pipe may be accepted.

(2) Verify that pipe is free from damage from shipping and handling. Concrete sewer pipe requires testing after installation in conformance with the *Standard Specifications* Section 7-04.

5. Specification Requirements: See *Standard Specifications* Section 9-05. Review contract documents to determine if supplemental specifications apply.

9-4.17 Galvanized Steel, Aluminized Steel and Aluminum Corrugated Metal Culvert, Drain Pipe and Perforated Underdrain Pipe

1. Approval of Material: Approval of materials is required prior to use. This approval may either be by virtue of the inclusion of this material/product on the Qualified Products List or by approval of a Request for Approval of Material (DOT Form 350-071). If approval is by means of QPL, be certain to verify that product is in fact qualified for its intended use, product is listed under appropriate specification. Notify Materials Fabrication Inspection Office of the need to provide Inspection Services for a fabrication facility not listed on the QPL. Approval of the fabrication facility as well as the base metal must be obtained.

2. Preliminary Samples: A preliminary sample of the material will be required only if requested on Request for Approval of Material (DOT Form 350-071).

3. Acceptance:

a. QPL Acceptance: Untreated metal culvert and drainpipe may be accepted at the job site from pipe provided by a manufacturer listed in the QPL. If the pipe shipment does not identify the pipe manufacturer, shipping Bill of Lading should be requested prior to accepting or installing the pipe. Pipe delivered without the appropriate AASHTO specification for the steel sheet, gauge thickness, and heat number stamped on

the pipe, shall not be installed. Record heat numbers for each pipe installation. Any pipe, which is damaged in any way from shipping or handling, should not be accepted.

b. Non-QPL Acceptance:

(1) The Materials Fabrication Inspection Office will inspect treated metal culvert pipe at the point of fabrication. A representative number of pipes in each shipment will display "WSDOT INSPECTED," stamp. See Figure 9-3. If none of the pipe bears the "WSDOT INSPECTED" stamp, contact the Fabrication Inspection Office to arrange for an on-site inspection prior to installation.

(2) Untreated metal culvert and drainpipe provided by a manufacturer not listed in the QPL may be accepted at the job site under the following conditions:

(a) Source approval granted by the FOSSC Materials Laboratory for pipe fabrication and steel sheet.

(b) Facilities inspection performed by the Materials Fabrication Inspection Office if required on Request for Approval of Materials.

(c) Manufacturer's Certificate of compliance with supporting Mill Test Reports provided prior to installing pipe.

4. Field Inspection: Check each delivery for fabrication details and quality of workmanship. Check for shipping damage and ensure that the spelter coating is intact. Check treated pipe for damage to coating. Obtain documentation for all pipes not accepted under provisions established in the QPL. Contact the Materials Fabrication Inspection Office for assistance.

5. Specification Requirements: See *Standard Specifications* Section 9-05. Review contract documents to determine if supplemental specifications apply.

9-4.18 Perforated Underdrain Pipe

1. Approval of Material: Approval of materials is required prior to use. This approval may either be by virtue of the inclusion of this material/product on the Qualified Products List or by approval of a Request for Approval of Material (DOT Form 350-071). If approval is by means of QPL, be certain to verify that product is in fact qualified for its intended use, product is listed under appropriate specification.

2. Preliminary Samples: Not required unless requested on Request for Approval of Material (DOT Form 350-071).

3. Acceptance: Pipe may be accepted on Manufacturer's Certificate of Compliance and field inspection.

4. Field Inspection: Check for compliance with specifications, particularly the size and spacing of holes, and for shipment and handling damage.

5. Specification Requirements: See *Standard Specifications* Section 9-05.2. Review contract documents to determine if supplemental specifications apply.

9-4.19 Structural Plate Pipes and Arches

1. Approval of Material: Approval of materials is required prior to use. This approval may either be by virtue of the inclusion of this material/product on the Qualified Products List or by approval of a Request for Approval of Material (DOT Form 350-071). If approval is by means of QPL, be certain to verify that product is in fact qualified for its intended use, product is listed under appropriate specification.

2. Preliminary Samples: A preliminary sample of the material will be required only if requested on Request for Approval of Material (DOT Form 350-071).

3. Acceptance: Acceptance may be on the basis of Manufacturer's Certificate of Compliance, with accompanying mill test reports. The certification must accompany the shipment and must contain the information which is listed hereinafter:

a. Chemical analysis of the base metal of each heat number in the shipment

b. The mass of zinc coating for each heat number in the shipment

c. A statement that all materials conform to requirements of the specifications

d. The certification must be on company letterhead and signed by a responsible company official whose title shall be indicated. All suppliers of structural plate pipe and arches are to transmit four copies of the certification to the Project Engineer. At least one copy must accompany the shipment; the others may be forwarded through the Contractor. Two copies of the certification are to be retained in the Project Engineer's files.

4. Field Inspection: Verify the materials received on the job site, is in fact the same make, model, lot, batch, size, color, blend, etc. as approved for use, be it by QPL or via the Request for Approval of Material (DOT Form 350-071). Check for breaks in zinc or asphalt coating and for damage from shipment. Material in the shipment must be properly identified as to heat number.

5. Specification Requirements: See *Standard Specifications* Section 9-05.6. Review contract documents to determine if supplemental specifications apply.

9-4.20 Gray-Iron Castings, Steel Castings, Ductile-Iron Castings (Catch Basin Frames and Grates, Manhole Rings and Covers, Monument Case and Cover, etc.)

1. Approval of Material: Approval of fabricator is required prior to use. This approval may either be by virtue of the inclusion of this material/product on the Qualified Products List or by approval of a Request for Approval of

Material (DOT Form 350-071). An inspection to qualify a manufacturer will be required only ifrequested on Request for Approval Material (DOT Form 350-071). The Materials Fabrication Inspection Office will perform an on-site inspection of the manufacturing facilities prior to approval. Notify the Materials Fabrication Inspection Office of need to provide Inspection Services.

2. Preliminary Samples: A preliminary sample of the material will be required only if requested on Request for Approval of Material (DOT Form 350-071).

3. Acceptance: Acceptance will be based on Inspected Items Stamp (Figure 9-7). All castings will be steel stamped by the Materials Fabrication Inspection Office Inspector.

For Standard Plan B-2a and B-2b the frame and grate will each be stamped. Align the two stamps adjacent to each other. This alignment is critical as the leveling pads are ground to prevent rocking of the grates in the frames.

4. Field Inspection: Verify the materials received on the job site, is in fact the same make, model, lot, batch, size, etc. as approved for use, be it by QPL or via the Request for Approval of Material (DOT Form 350-071). Check for defects listed in the *Standard Specifications*. Check for the Inspector's approved stamp (Figure 9-7) and document it.

5. Specification Requirements: See *Standard Specifications* Sections 9-05.15, and 9-22.1. Review contract documents to determine if supplemental specifications apply.

9-4.21 Sanitary Sewers

1. Approval of Material: Approval of materials is required prior to use. This approval may either be by virtue of the inclusion of this material/product on the Qualified Products List or by approval of a Request for Approval of Material (DOT Form 350-071). If approval is by means of QPL, be certain to verify that product is in fact qualified for its intended use, product is listed under appropriate specification. An inspection to qualify a manufacturer of concrete pipe will be required only if requested on Request for Approval Material (DOT Form 350-071). The Materials Fabrication Inspection Office will perform an on-site inspection of the manufacturing facilities prior to approval.

2. Preliminary Samples: A preliminary sample of the material will be required only if requested on Request for Approval of Material (DOT Form 350-071).

3. Acceptance:

a. QPL Acceptance:

If using the QPL, be sure to verify appropriate means of acceptance, see applicable Acceptance Code within the QPL.

b. Non-QPL Acceptance:

Material may be accepted in lieu of sampling upon receipt of an "Approved" document as shown below:

(1) Ductile Iron Sewer Pipe — Manufacturer's Certificate of Compliance

(2) Plain Concrete Storm Sewer Pipe — Concrete Pipe Acceptance Report *

(3) Reinforced Concrete Storm Sewer Pipe — Concrete Pipe Acceptance Report *

(4) Vitrified Clay Sewer Pipe — Manufacturer's Certificate of Compliance.

(5) PVC Sewer Pipe — Manufacturer's Certificate of Compliance.

(6) Ductile Iron Sewer Pipe — Manufacturer's Certificate of Compliance.

(7) ABS Composite Sewer Pipe — Manufacturer's Certificate of Compliance.

*For concrete pipe 30 inches (750 millimeters) in diameter and larger, accepted pipe will be stamped "APPROVED FOR SHIPMENT" with ID number (Figure 9-5) on each piece of pipe.

4. Field Inspection: Check material delivered to the project for damage, and conformance to the contract documents.

5. Specification Requirements: See *Standard Specifications* Section 7-17. Review contract documents to determine if supplemental specifications apply.

9-4.22 Steel for Bridges

1. Approval of Material: Approval of the fabricator as well as the manufacturer of the steel is required prior to use. Upon receipt of the "Request for Approval of Material," the Materials Fabrication Inspection Office will inspect the fabrication shop to ensure it meets all contract requirements. A copy of the Request for Approval of Material will be sent to the Materials Fabrication Inspection Office.2. Preliminary Samples: A preliminary sample of the material will be required only if requested on Request for Approval of Material (DOT Form 350-071).

3. Acceptance: Materials and fabrication will be accepted on Approved for Shipment stamps or tags (Figure 9-4 or 9-5) except in the case of minor parts. As soon as the fabricator receives the materials, the Materials Fabrication Inspection Office Inspector will check the accompanying mill test certificates to ensure the materials meet contract requirements. The Materials Fabrication Inspection Office Inspector will also provide weekly written shop inspection reports to the Project Engineer while major steel structures are being fabricated.

4. Field Inspection: Check for "APPROVED FOR SHIPMENT" tags or stamps (Figure 9-4 or 9-5) and shipping and handling damage.

5. Specification Requirements: See *Standard Specifications* Sections 6-03 and 9-06. Review contract documents to determine if supplemental specifications apply.

9-4.23 Unfinished Bolts (Ordinary Machine Bolts), Nuts, and Washers

1. Approval of Material: Approval of materials is required prior to use. This approval may either be by virtue of the inclusion of this material/product on the Qualified Products List or by approval of a Request for Approval of Material (DOT Form 350-071). If approval is by means of QPL, be certain to verify that product is in fact qualified for its intended use, product is listed under appropriate specification.

2. Preliminary Samples: A preliminary sample of the material will be required only if requested on Request for Approval of Material (DOT Form 350-071).

3. Acceptance: Unfinished bolts, nuts, and washers may be accepted on receipt of Manufacturer's Certificate of Compliance. If using the QPL, be sure to verify appropriate means of acceptance, see applicable Acceptance Code within the QPL.

4. Field Inspection: Verify the materials received on the job site, is in fact the same make, model, lot, batch, size, color, blend, etc. as approved for use, be it by QPL or via the Request for Approval of Material (DOT Form 350-071).

Check each lot of material delivered to the project for damage, and that accompanying Manufacturer's Certificate of Compliance is present.

5. Specification Requirements: See *Standard Specifications* Section 9-06.5(1). Review contract documents to determine if supplemental specifications apply.

9-4.24 High Strength Bolts, Nuts and Washers

1. Approval of Material: Approval of materials is required prior to use. This approval may either be by virtue of the inclusion of this material/product on the Qualified Products List or by approval of a Request for Approval of Material (DOT Form 350-071). If approval is by means of QPL, be certain to verify that product is in fact qualified for its intended use, product is listed under appropriate specification.

2. Preliminary Samples: A preliminary sample of the material will be required only if requested on Request for Approval of Material (DOT Form 350-071).

3. Acceptance: Materials may be accepted on receipt of "SATISFACTORY" test reports from the FOSSC Materials Laboratory. When the materials are received on the job site, sample each shipment of the bolts, nuts, and washers in accordance with the table in Section 9-06.5(3) of the *Standard Specifications*. A separate transmittal and materials certification shall accompany each sample of bolts, each sample of washers, and each sample of nuts.

4. Field Inspection: Verify the materials received on the job site, is in fact the same make, model, lot, batch, size, color, blend, etc. as approved for use, be it by QPL or via the Request for Approval of Material (DOT Form 350-071). Make certain that material being used is from a lot represented by "SATISFACTORY" test report.

5. Specification Requirements: See *Standard Specifications* Section 9-06.5(3). Review contract documents to determine if supplemental specifications apply.

9-4.25 Anchor Bolts

1. Approval of Material: Approval of materials is required prior to use. This approval may either be by virtue of the inclusion of this material/product on the Qualified Products List or by approval of a Request for Approval of Material (DOT Form 350-071). If approval is by means of QPL, be certain to verify that product is in fact qualified for its intended use, product is listed under appropriate specification. Notify the Materials Fabrication Inspection Office of need to provide Inspection Services.

2. Preliminary Samples: A preliminary sample of the material will be required only if requested on Request for Approval of Material (DOT Form 350-071).

3. Acceptance: Acceptance may be based on "APPROVED FOR SHIPMENT" tags and/or stamp (Figure 9-4 or 9-5).

4. Field Inspection: Check for "APPROVED FOR SHIPMENT" tags and/or stamp (Figure 9-4 or 9-5). Check for damage due to shipping and handling.

5. Specification Requirements: See *Standard Specifications* Section 9-06.5(4). Review contract documents to determine if supplemental specifications apply.

9-4.26 Reinforcing Bars for Concrete

1. Approval of Material: Approval of material is required prior to use. This approval may either be by virtue of the inclusion of this material/product on the Qualified Products List or by approval of a Request for Approval of Material (DOT Form 350-071).

2. Preliminary Samples: May be required if requested on Request for Approval of Material (DOT Form 350-071).

3. Acceptance: Acceptance will be by the Fabricators Certification of Compliance and Certified Mill Test Reports that will accompany each shipment.

Note: If Mill Test reports are not available, do not incorporate steel into the project and contact the FOSSC Materials Laboratory, General Materials Engineer for guidance.

Representative of the Materials Fabrication Inspection Office may take random samples at the point of fabrication.

4. Field Inspection: Check for Certification of Compliance and Certified Mill Test Reports for sizes and heats of rebar. Remove excess rust and mill scale before using. Check steel fabrication and bends for compliance with contract documents.

5. Specification Requirements: See *Standard Specifications* Section 9-07. Review contract documents to determine if supplemental specifications apply.

9-4.27 Epoxy Coated Reinforcing Steel Bars for Concrete

1. Approval of Material: Approval of materials is required for both materials and coating applicator prior to use. This approval may either be by virtue of the inclusion of this material/product on the Qualified Products List or by approval of a Request for Approval of Material (DOT Form 350-0712). If approval is by means of QPL, be certain to verify that product is in fact qualified for its intended use, product is listed under appropriate specification.

2. Preliminary Samples: A preliminary sample of the material will be required only if requested on Request for Approval of Material (DOT Form 350-071). Notify Materials Fabrication Inspection Office of need to provide Inspection Services.

3. Acceptance: Material may be accepted on "APPROVED FOR SHIPMENT" stamp or tag (Figure 9-4 or 9-5).

Note: If bar is not tagged "APPROVED FOR SHIPMENT" do not incorporate steel into the project and contact the Materials Fabrication Inspection Office for guidance.

Representatives of the Materials Fabrication Inspection Office may take random samples at the point of fabrication and at the coating facility. The Fabricator shall provide the Mill Certificates to the Materials Fabrication Inspection Office Inspector.

4. Field Inspection: Check shipment for "APPROVED FOR SHIPMENT" stamp or tag (Figure 9-4 or 9-5). Check coating for shipping damage, check steel fabrication and bends for compliance with contract documents.

5. Specification Requirements: See *Standard Specifications* Section 9-07. Review contract document to determine if supplemental specifications apply.

9-4.28 Mechanical Splices

1. Approval of Material: Approval of materials is required prior to use. This approval may either be by virtue of the inclusion of this material/product on the Qualified Products List or by approval of a Request for Approval of Material (DOT Form 350-071). If approval is by means of QPL, be certain to verify that product is in fact qualified for its intended use, product is listed under appropriate specification.

2. Preliminary Sample: A preliminary sample for qualifying the rebar coupling system, will be required only if requested on Request for Approval of Material (DOT Form 350-071). The sample to include a made up splice for each size bar to be used and include the manufacturers product information. The overall length of spliced rebars should be approximately 5 to 6 feet (2 meters).

3. Acceptance: Material may be accepted on receipt of a "SATISFACTORY" Test Report from the FOSSC Materials Laboratory from contractors assembled samples (see Note) taken from the project. A Manufacturer's Certificate of Compliance and other technical data MUST be submitted with the samples. The overall length of spliced rebars should be at least 5 feet (2 meters).

Note: This is a test of the Contractors ability to properly assemble the splice as much as it is a test of the quality of the materials. For this reason the spliced bars <u>must</u> be assembled by the contractors personnel, witnessed by the inspector and transmitted <u>intact</u> to the FOSSC Material Lab for testing.

4. Field Inspection: Verify the materials received on the job site, is in fact the same make, model, lot, batch, size, color, blend, etc. as approved for use, be it by QPL or via the Request for Approval of Material (DOT Form 350-071), and having "Satisfactory" test results.

5. Specification Requirements: See *Standard Specifications* Section 6-02.3(24)F and G. Review contract documents to determine if supplemental specifications apply.

9-4.29 Rebar Chairs, Dobies, and Spacers

1. Approval of Material: Approval of materials is required prior to use. This approval may either be by virtue of the inclusion of this material/product on the Qualified Products List or by approval of a Request for Approval of Material (DOT Form 350-071). If approval is by means of QPL, be certain to verify that product is in fact qualified for its intended use, product is listed under appropriate specification.

2. Preliminary Sample: A preliminary sample of the material will be required only if requested on Request for Approval of Material (DOT Form 350-071).

3. Acceptance:

   a. Dobie Blocks: Material may be accepted on receipt of Manufacturer's Certificate of Compliance with supporting test reports. See *Standard Specifications* Section 6-02.3(24)C.

   b. Rebar Chairs and Spacers: May be accepted based upon inclusion in the QPL as an "Approved" product.

4. Field Inspection: Verify the materials received on the job site, is in fact the same make, model, lot, batch, size, color, blend, etc. as approved for use, be it by QPL or via the Request for Approval of Material (DOT Form 350-071).

5. Specification Requirements: See *Standard Specifications* Section 6-02.3(24)C. Review contract documents to determine if supplemental specifications apply.

9-4.30 Dowels and Tiebars for Concrete Pavement, incl. Epoxy Coated

1. Approval of Material: Approval of material is required prior to use. This approval may either be by virtue of the inclusion of this material/product on the Qualified Products List or by approval of a Request for Approval of Material (DOT Form 350-071). If approval is by means of QPL, be certain to verify that product is in fact qualified for

its intended use, product is listed under appropriate specification.

2. Preliminary Sample: A preliminary sample of two dowels will be required only if requested on Request for Approval of Material (DOT Form 350-071).

3. Acceptance: Acceptance may be on Manufacturer's Certificate of Compliance with accompanying Mill Test Reports for both steel and coating process.

4. Field Inspection: Check for dimensional conformance and if proper mill test certificates have been provided. Check epoxy coating for damage and uniformity.

5. Specification Requirements: See *Standard Specifications* Section 9-07.5 and 9-07.6. Review contract documents to determine if supplemental specifications apply.

9-4.31 Wire Reinforcement for Concrete

1. Approval of Material: Approval of materials is required prior to use. This approval may either be by virtue of the inclusion of this material/product on the Qualified Products List or by approval of a Request for Approval of Material (DOT Form 350-071). If approval is by means of QPL, be certain to verify that product is in fact qualified for its intended use, product is listed under appropriate specification.

2. Preliminary Samples: May be required if requested on Request for Approval of Material (DOT Form 350-071).

3. Acceptance: Acceptance will be by the Manufacturer's Certificate of Compliance and Certified Mill Test Reports that accompany each shipment.

4. Field Inspection: Check for excessive rust on wire, and check the spacing of the wires and weight per square yard (meter).

5. Specification Requirements: See *Standard Specifications* Section 9-07.7, 9-07.8, 9-07.9. Review contract documents to determine if supplemental specifications apply.

9-4.32 Bridge Approach Slab Anchors

1. Approval of Material: Approval of material is required prior to use. This approval may either be by virtue of the inclusion of this material/product on the Qualified Products List or by approval of a Request for Approval of Material (DOT Form 350-071). If approval is by means of QPL, be certain to verify that product is in fact qualified for its intended use, product is listed under appropriate specification.

2. Preliminary Sample: A preliminary sample of the material will be required only if requested on Request for Approval of Material (DOT Form 350-071).

3. Acceptance:

   a. Anchors Type A: These anchors may be accepted on a Manufacturers Certificate of Compliance for the Steel Rod and Plate.

   b. Anchors Type B: These anchors may be accepted on a Manufacturers Certificate of Compliance for the Threaded Steel Rod and Steel Plate and Manufacturers Product Information on _ inch stop coupling.

   c. Other Anchor Rod materials: Such as plastic pipe, polystyrene, and duct tape may be accepted on visual inspection.

4. Field Inspection: Check material delivered to the project for conformance with the contract plan and specifications.

5. Specification Requirements: See Standard Plans A2 and *Standard Specifications* Section 5-05.3(19). Review contract documents to determine if supplemental specifications apply.

9-4.33 Prestressing/Post Tensioning Reinforcement — Strand

1. Approval of Material: Approval of materials is required prior to use. This approval may either be by virtue of the inclusion of this material/product on the Qualified Products List or by approval of a Request for Approval of Material (DOT Form 350-071). If approval is by means of QPL, be certain to verify that product is in fact qualified for its intended use, product is listed under appropriate specification.

2. Preliminary Samples: A preliminary sample of the material will be required only if requested on Request for Approval of Material (DOT Form 350-071).

3. Acceptance: Acceptance will be on "SATISFACTORY" laboratory test report only. Submit one sample (minimum of 5 feet (2 meters) in length) from each reel or pack. A copy of a Manufacturer's Certificate of Compliance with supporting test report and stress/strain curve MUST accompany each sample submitted for testing.

4. Field Inspection: Check the strand for dirt, grease or rust. Verify the materials received on the job site, is in fact the same make, model, lot, batch, size, color, blend, etc., a approved for use, be it by QPL or via the Request for Approval of Material (DOT Form 350-071).

5. Specification Requirements: See *Standard Specifications* Section 9-07.10. Review contract documents to determine if supplemental specifications apply.

9-4.34 Prestressing/Post Tensioning Reinforcement — Bar

1. Approval of Material: Approval of materials is required prior to use. This approval may either be by virtue of the inclusion of this material/product on the Qualified Products List or by approval of a Request for Approval of Material (DOT Form 350-071). If approval is by means of QPL, be certain to verify that product is in fact qualified for its intended use, product is listed under appropriate specification.

2. Preliminary Samples: A preliminary sample of the material will be required only if requested on Request for Approval of Material (DOT Form 350-071).

3. Acceptance: Acceptance will be on "SATISFACTORY" laboratory test report only. Send two samples from each heat. If supplemental requirements apply, send additional samples of two bars from each heat. See contract documents. The samples must be a minimum of 5 feet (2 meters) in length. A copy of the Manufacturer's Certificate of Compliance shall accompany each heat of reinforcing bar.

4. Field Inspection: Check material delivered to the project for damage. Verify the materials received on the job site, is in fact the same make, lot, batch, size, etc., as approved for use, be it by QPL or via the Request for Approval of Material (DOT Form 350-071).

5. Specification Requirements: Review contract documents to determine specification requirements.

9-4.35 Paints for Structures

1. Approval of Material: Approval of source is required prior to use. This approval may either be by virtue of the inclusion of this material/product on the Qualified Products List or by approval of a Request for Approval of Material (DOT Form 350-071). If approval is by means of QPL, be certain to verify that product is in fact qualified for its intended use, product is listed under appropriate specification.

2. Preliminary Samples: Preliminary Samples will be required only if requested on Request for Approval of Material (DOT Form 350-071).

3. Acceptance: Paint will be sampled at the point of production and tested by the FOSSC Materials Laboratory prior to its receipt on the project. The lot number on the containers must be checked against the Laboratory test reports. Except as indicated, paint which has not been tested and accepted by the Laboratory will **not** be used. When less than 20 gallons (80 liters) of one kind of paint are involved, its use without laboratory tests may be approved upon the Manufacturer's Certificate of Compliance that the material meets the specification. The certificate shall include a list of materials and the quantities used. One copy of the certificate shall be submitted to the FOSSC Materials Laboratory for approval.

4. Field Inspection: No field samples are required. Material shall be accepted on satisfactory test report or lot approval by the FOSSC Materials Laboratory. Verify the materials received on the job site, is in fact the same make, model, lot, batch, size, color, blend, etc. as approved for use, be it by QPL or via the Request for Approval of Material (DOT Form 350-071).

See that paint is not caked in the container, that it is free from skins and is well stirred before withdrawing portions for use.

After application the paint should dry to a uniform film without running, streaking or sagging.

5. Specification Requirements: See *Standard Specifications* Section 9-08. Review contract documents to determine if supplemental specifications apply.

9-4.36 Structural Timber and Lumber — Untreated

1. Approval of Material: Approval of material is required prior to use. This approval may either be by virtue of the inclusion of this material/product on the Qualified Products List or by approval of a Request for Approval of Material (DOT Form 350-071). If approval is by means of QPL, be certain to verify that product is in fact qualified for its intended use, product is listed under appropriate specification.

2. Preliminary Samples: A preliminary sample of the material will be required only if requested on Request for Approval of Material (DOT Form 350-071).

3. Acceptance:

a. Permanent structures and sign posts 6 inches x 6 inches (150 mm x 150 mm) and larger require a Manufacturer's Certificate of Compliance (i.e., Grading Certificate) conforming to the requirements of the *Standard Specifications*. The Grading Certificate will be issued by the grading bureau whose authorized stamp is being used, or by themill grading the timber or lumber under the supervision of one of the following lumber grading agencies: West Coast Lumber Inspection Bureau (WCLIB), Western Wood Products Association (WWPA), or the Pacific Lumber Inspection Bureau (PLIB). A typical lumber grade stamp as used by the various inspection agencies are shown in the QPL, Appendix B:

b. Sign posts less than 6 inches x 6 inches (150 mm x 150 mm), mileposts, sawed fence posts, and mailbox posts will be accepted by visual determination in the field that each post is stamped with the correct lumber grade. The PLIB graded lumber will be graded under the grading rules of one of the other two listed agencies and will be grade stamped accordingly. All timber and lumber is subject to re-inspection upon delivery to the project.

4. Field Inspection: Check that all lumber and timber has the proper lumber grade stamps.

5. Specification Requirements: See *Standard Specifications* Section 9-09. Review contract documents to determine if supplemental specifications apply.

9-4.37 Treated Timber and Piling

1. Approval of Material: Approval of materials and treating facility are required prior to use. This approval may either be by virtue of the inclusion of this material/product on the Qualified Products List or by approval of a Request for Approval of Material (DOT Form 350-071). If approval is by means of QPL, be certain to verify that product is in fact qualified for its intended use, product is listed under appropriate specification.

2. Preliminary Samples: A preliminary sample of the material will be required only if requested on Request for Approval of Material (DOT Form 350-071).

3. Acceptance:

a. Permanent structures, sign posts 6 inches x 6 inches (150 mm x 150 mm) and larger. Check for "APPROVED FOR SHIPMENT" tag (Figure 9-6). Approved for shipment tags will be stapled to the ends of the pilings or timber. All piling will be stamped or tagged on the butt end. Only about one-third of the approved timber pieces will be stamped or tagged for acceptance.

b. Sign posts less than 6 inches x 6 inches (150 mm x 150 mm), mileposts, sawed fence posts, and mailbox posts shall be accepted as listed under 9-4.36.

4. Field Inspection: Check primarily for damage caused by handling. Check pieces for "APPROVED FOR SHIPMENT" stamp or tag (Figure 9-6).

5. Specification Requirements: See *Standard Specifications* Sections 9-09 and 9-10. Review contract documents to determine if supplemental specifications apply.

9-4.38 Piling — Untreated

1. Approval of Material: Approval of material is not required prior to use for temporary structures.

2. Preliminary Samples: A preliminary sample of the material will be required only if requested on Request for Approval of Material (DOT Form 350-071).

3. Acceptance: Field inspection for compliance with contract requirements.

4. Field Inspection: Check for compliance with specifications.

5. Specification Requirements: See *Standard Specifications* Section 9-10.1(1). Review contract documents to determine if supplemental specifications apply.

9-4.39 Steel H-Piling

1. Approval of Material: Approval of material is required prior to use. This approval may either be by virtue of the inclusion of this material/product on the Qualified Products List or by approval of a Request for Approval of Material (DOT Form 350-071). If approval is by means of QPL, be certain to verify that product is in fact qualified for its intended use, product is listed under appropriate specification.

2. Preliminary Samples: Samples are not required unless requested on Request for Approval of Material (DOT Form 350-071). Submit a 1-foot (300-mm) section of the piling if requested.

3. Acceptance: Material may be accepted on satisfactory Manufacturer's Certificate of Compliance including mill certificates showing heat number, physical properties and chemical composition.

4. Field Inspection: Check material in each shipment against heat numbers shown on Mill Test Certificates. Check for damage due to shipping and handling.

5. Specification Requirements: See *Standard Specifications* Section 9-10.5. Review contract documents to determine if supplemental specifications apply.

9-4.40 Hollow Steel Piling and Jack Casing

1. Approval of Material: Approval of material is required prior to use. This approval may either be by virtue of the inclusion of this material/product on the Qualified Products List or by approval of a Request for Approval of Material (DOT Form 350-071). If approval is by means of QPL, be certain to verify that product is in fact qualified for its intended use, product is listed under appropriate specification.

2. Preliminary Sample: Samples are not required unless requested on Request for Approval of Material (DOT Form 350-071). Submit a 1-square foot (300 mm^2) section of the piling if requested.

3. Acceptance: Material may be accepted on satisfactory Manufacturer's Certificate of Compliance showing heat number, physical properties, and chemical composition.

4. Field Inspection: Check material in each shipment against heat numbers shown on Mill Test Certificates. Check for damage due to shipping and handling.

5. Specification Requirements: See *Standard Specifications* Section 9-10.5. Review contract documents to determine if supplemental specifications apply.

9-4.41 Precast Concrete Catch Basins, Manholes, and Inlets

1. Approval of Material: Approval of materials is required prior to use. This approval may either be by virtue of the inclusion of this material/product on the Qualified Products List or by approval of a Request for Approval of Material (DOT Form 350-071). If approval is by means of QPL, be certain to verify that product is in fact qualified for its intended use, product is listed under appropriate specification.

2. Preliminary Samples: A preliminary sample of the material will be required only if requested on Request for Approval of Material (DOT Form 350-071).

3. Acceptance: Acceptance will be based on "WSDOT Inspected" stamp (Figure 9-3) provided by the Materials Fabrication Inspection Office Inspector.

4. Field Inspection: Check for shipping and handling damage and "WSDOT Inspected" stamp (Figure 9-3).

5. Specification Requirements: See *Standard Specifications* Section 9-12. Review contract documents to determine if supplemental specifications apply.

9-4.42 Riprap, Quarry Spalls, Slope Protection, and Rock Wall

1. Approval of Material: Consult the Aggregate Sources Approval (ASA) database for approval of material for each source prior to use.

2. Preliminary Samples: A preliminary sample of the material will be required only if requested on the Request for Approval of Material (DOT Form 350-071) or if the ASA database indicated that the aggregate source has expired. Contact the Regional Materials Office if preliminary samples are required. Preliminary samples for the aggregate shall be made up of 50-80 pounds (25-35 kilograms) are required to perform the quality tests. The sample is to be shipped in increments, using satisfactory containers, not exceeding 30 pounds (15 kilograms).

3. Acceptance:

a. When project quantities are less than 30 cubic yards (100 cubic meters) 250 tons (tonnes), the Project Engineer may accept the material by visual inspection.

b. When project quantities exceed 130 cubic yards (100 cubic meters) 250 tons (tonnes), the Project Engineer shall determine that the grading is in conformance with the *Standard Specifications* Section 9-13, or that the Gabion Stone is in conformance with Section 9-27.

4. Field Inspection: See that the gradation remains constant.

5. Specification Requirements: See *Standard Specifications* Section 9-13.

9-4.43 Semi-Open Slope Protection

1. Approval of Material: Approval of material is required prior to use. This approval may either be by virtue of the inclusion of this material/product on the Qualified Products List or by approval of a Request for Approval of Material (DOT Form 350-071). If approval is by means of QPL, be certain to verify that product is in fact qualified for its intended use, product is listed under appropriate specification.

2. Preliminary Samples: A preliminary sample of the material will be required only if requested on Request for Approval of Material (DOT Form 350-071).

3. Acceptance: Material may be accepted on receipt of Manufacturer's Certificate of Compliance.

4. Field Inspection: Check material delivered to the project for conformance with the contract plan and specifications. Also check for shipping damage.

5. Specification Requirements: See *Standard Specifications* Section 9-13.5. See Standard Plans. Review contract documents to determine if supplemental specifications apply.

9-4.44 Plant Material

1. Approval of Material: Approval of material is required prior to use by a Request for Approval of Material (DOT Form 350-071).

2. Preliminary Samples: A preliminary sample will be required for all plant material except for trees. Color photographs showing a full view and close-ups and/or cuttings off an individual limb, may be substituted in lieu of the trees if the detail is such that the variety and form can be identified from the photographs and materials furnished.

3. Acceptance: After the approval of the material, the plants may be accepted based on field inspection on the job site. Sample lots as provided in (4), Field Inspection will be the inspection of the acceptance samples. Acceptable samples will be incorporated into the project.

4. Field Inspection: Check for uniformity of plants within each lot and for representative sample lot based on the following:

(N = total number of plants in lot)
(n = number of plants in sample lot)

Total Number of Plants (N)	Minimum No. of Plants Required to Make Sample Lot (n)
0 - 500	N
501 - 1,000	500 +0.04 (N - 500)
1,001 - 5,000	520 +0.03 (N - 1,000)
5,001 - 30,000	600+0.02 (N - 5,000)
Over 30,000	850+0.005 (N - 30,000)

Should 5 percent or less of the sample lot fail, the entire lot may be accepted. Should over 5 percent of the acceptance sample lot fail to meet nominal specification requirements, the entire lot shall be rejected and removed from the job. The Engineer may accept the plants if there is a large percentage of plants that appears to be exceptionally hearty and vigorous after sorting by the Contractor. If done immediately, the Contractor shall be allowed to sort and remove the substandard portion of the plants.

After the contractor has completed sorting, a new sample lot based on the above schedule of the remaining stock will again be selected and inspected. Should 5 percent or less of this sample lot fail, the sorted lot may be accepted.

5. Specification Requirements: See *Standard Specifications* Section 9-14.6. Review contract documents to determine if supplemental specifications apply.

9-4.45 Topsoil Type A

1. Approval of Material: Approval of Topsoil Type A prior to use is required by a Request for Approval of Material (DOT Form 350-071).

2. Preliminary Samples: A preliminary sample of the material will be required only if requested on Request for Approval of Material (DOT Form 350-071). Samples of (5-10 pounds (3-5 kilograms) are required to perform the qualifying tests.

3. Acceptance: Material may be accepted upon receipt of a Manufacturer's Certificate of Compliance with accompanying test reports verifying conformance with the Contract Specifications.

4. Field Inspection: The material shall be inspected for roots, weeds, subsoil, rocks, and other debris.

5. Specification Requirements: See *Standard Specifications* Section 9-14.1. Review contract documents to determine if supplemental specifications apply.

9-4.46 Seed

1. Approval of Material: Approval of materials is required prior to use. This approval may either be by virtue of the inclusion of this material/product on the Qualified Products List or by approval of a Request for Approval of Material (DOT Form 350-071). If approval is by means of QPL, be certain to verify that product is in fact qualified for its intended use, product is listed under appropriate specification. If there is a question on the intended use of the seed, contact the FOSSC Horticulturist.

2. Preliminary Samples: A preliminary sample of the material will be required only if requested on Request for Approval of Material (DOT Form 350-071).

3. Acceptance: Material may be accepted on analysis shown on the label. If using the QPL, be sure to verify appropriate means of acceptance, see applicable Acceptance Code within the QPL.

4. Field Inspection: Each individual sack of seed must contain a label (tag) as to the contents and be unopened prior to use on the project. At least one label should be retained in the project records in the event that subsequent questions or claims may arise. Verify the materials received on the job site, is in fact the same make, model, lot, batch, size, color, blend, etc. as approved for use, be it by QPL or via the Request for Approval of Material (DOT Form 350-071).

5. Specification Requirements: See *Standard Specifications* Section 9-14.2. Review contract documents to determine if supplemental specifications apply.

9-4.47 Fertilizer

1. Approval of Material: Approval of materials is required prior to use. This approval may either be by virtue of the inclusion of this material/product on the Qualified Products List or by approval of a Request for Approval of Material (DOT Form 350-071). If approval is by means of QPL, be certain to verify that product is in fact qualified for its intended use, product is listed under appropriate specification. If there is a question on the intended use of the fertilizer, contact the FOSSC Horticulturist.

2. Preliminary Samples: A preliminary sample of the material will be required only if requested on Request for Approval of Material (DOT Form 350-071).

3. Acceptance:

a. Fertilizer for General Use. Fertilizer may be accepted based on approval of material and chemical content shown on container labels meeting contract requirement. No fertilizer shall be used from unidentified or unlabeled containers.

b. Fertilizer for Erosion Control. For Erosion Control on projects with total quantities less than 5 acres (2 hectares) of Compliance, acceptance of fertilizer may be made by verification of the components based on stamped or printed bag analysis. Projects involving 5 acres (2 hectares) or more shall require a certified analysis of each component furnished meeting the requirements of a Manufacturer's Certificate

c. Fertilizer for Landscaping. Fertilizer for landscaping projects may be accepted on the basis of examination of the labeled contents for conformance to the project specifications.

4. Field Inspection: Verify the materials received on the job site, is in fact the same make, model, lot, batch, size, color, blend, etc. as approved for use, be it by QPL or via the Request for Approval of Material (DOT Form 350-071). Each individual sack must be labeled as to its contents, which must meet the requirements specified in the special provisions. All bags must be unopened prior to use on the project. Most fertilizers specified contain ureaform (38-0-0) which is blue-green in color, which makes that component's presence easy to identify. Retain label showing analysis for contract records.

5. Specification Requirements: See *Standard Specifications* Section 9-14.3. Review contract documents to determine if supplemental specifications apply.

9-4.48 Mulch

1. Approval of Material: Approval of material is required prior to use. This approval may either be by virtue of the inclusion of this material/product on the Qualified Products List or by approval of a Request for Approval of Material (DOT Form 350-071). If approval is by means of QPL, be certain to verify that product is in fact qualified for its intended use, product is listed under appropriate specification.

2. Preliminary Samples: A preliminary sample of the material will be required only if requested on Request for Approval of Material (DOT Form 350-071).

3. Acceptance: Material may be accepted as described below for the different types of mulch:

a. Straw — Visual inspection

b. Wood Cellulose Fiber — Manufacturer's Certificate of Compliance

c. Bark — Field gradation test (WSDOT Test Method 123)

d. Sawdust — Visual inspection

e. Tackifier — Manufacturer's Certification of Compliance

f. Compost — Waste handling permit, etc. see contract provisions

4. Field Inspection: Verify the materials received on the job site, is in fact the same make, model, lot, batch, size, color, blend, etc. as approved for use, be it by QPL or via the Request for Approval of Material (DOT Form 350-071). A visual inspection shall be made to ensure uniformity of the mulch. Also check for detrimental contamination.

5. Specification Requirements: See *Standard Specifications* Section 9-14.4. Review contract documents to determine if supplemental specifications apply.

9-4.49 Irrigation System

1. Approval of Material: Approval of materials is required prior to use. This approval may either be by virtue of the inclusion of this material/product on the Qualified Products List or by approval of a Request for Approval of Material (DOT Form 350-071). If approval is by means of QPL, be certain to verify that product is in fact qualified for its intended use, product is listed under appropriate specification.

2. Preliminary Samples: A preliminary sample of the material will be required only if requested on Request for Approval of Material (DOT Form 350-071).

3. Acceptance: The water distribution material listed below may be accepted based upon compliance with the following acceptance criteria. If using the QPL, be sure to verify appropriate means of acceptance, see applicable Acceptance Code within the QPL.

a. PVC Water Pipe – Manufacturer's Certificate of Compliance

b. Polyethylene Pipe – Manufacturer's Certificate of Compliance

c. Galvanized Iron Water Pipe – Manufacturer's Certificate of Compliance

d. Drip Tubing – Approved Catalog Cut

e. Automatic Controllers – Approved Catalog Cut

f. Sprinkler Head – Approved Catalog Cut

g. Valve Boxes and Protective Sleeves – Approved Catalog Cut

h. Gate Valves – Approved Catalog Cut

i. Manual Control Valves – Approved Catalog Cut

j. Automatic Control Valves – Approved Catalog Cut

k. Automatic Control Valves with Pressure Regulator – Approved Catalog Cut

l. Quick Coupling Equipment – Approved Catalog Cut

m. Drain Valves – Approved Catalog Cut

n. Hose Bibs – Approved Catalog Cut

o. Cross-Connection Control Devices – Approved Catalog Cut

p. Check Valves – Approved Catalog Cut

q. Pressure Reducing Valves – Approved Catalog Cut

r. Three-way Valves – Approved Catalog Cut

s. Flow Control Valves – Approved Catalog Cut

t. Air Relief Valve – Approved Catalog Cut

u. Electrical Wire and Splices – Approved Catalog Cut

v. Detectable Marking Tape – Approved Catalog Cut

w. Wye Strainers – Approved Catalog Cut

4. Field Inspection: Check for damage to the galvanized coatings in shipping and handling. See that damaged areas and field cut threads are protected with an approved galvanized repair paint formula, standard formula A-9-73. Verify the materials received on the job site, is in fact the same make, model, lot, batch, size, color, blend, etc. as approved for use, be it by QPL or via the Request for Approval of Material (DOT Form 350-071).

5. Specification Requirements: See *Standard Specifications* Section 9-15. Review contract documents to determine if supplemental specifications apply.

9-4.50 Fencing

1. Approval of Material: Approval of material is required prior to use. This approval may either be by virtue of the inclusion of this material/product on the Qualified Products List or by approval of a Request for Approval of Material (DOT Form 350-071). If approval is by means of QPL, be certain to verify that product is in fact qualified for its intended use, product is listed under appropriate specification.

2. Preliminary Samples: A preliminary sample of the material will be required only if requested on Request for Approval of Material (DOT Form 350-071).

3. Acceptance: Material may be accepted on receipt of "SATISFACTORY" test report from the FOSSC or Regional Materials Laboratory. Send acceptance samples as follows:

a. Chain Link Fabric — One sample consisting of three wires across full width of fabric from one roll for each 50 rolls.

b. Wire Mesh — One 12-inch (300-mm) sample across full width of roll, from one roll for each 50 rolls.

c. Barbed Wire — One 3-foot (1-meter) piece from one roll for each 50 spools.

d. Rails and Class 1 Posts for Chain Link Fence — Sample to consist of one post and rail, where applicable, for each 500 post or rails or fraction thereof.

e. Class 2 Posts for Chain Link Fence — Posts may only be used East of Cascades. Manufacturer's Certificate of Compliance must identify min. yield strength and both interior and exterior zinc coating thickness; otherwise, post must be sampled as above and tested to Class 1 specifications.

f. Wire Fence Line Posts — One complete post with plate for each 500 posts or fraction thereof.

g. Corner Posts or brace posts — One complete post assembly per 10 corner or brace posts.

h. Misc. Fence Hardware — These materials includes such items as tie wire, hog rings, galvanized bolts and nuts, fence clips, stays, post caps, tension band and bars, rail end caps, etc. The Engineer shall visually inspect and approve for use.

Above samples are to be taken from properly identified lots of material stored at job site. Be sure samples are numbered and properly identified as to Lot, if applicable, when sent to the Laboratory. If first sample fails, two additional samples are to be submitted from same lot. Resamples are to be properly identified as to Lot and referenced to previous Lab No. for first sample.

4. Field Inspection: Check for damage to zinc or other coating on posts, rails, hardware, etc. Verify the materials received on the job site, is in fact the same make, model, lot, batch, size, color, blend, etc. as approved for use, be it by QPL or via the Request for Approval of Material (DOT Form 350-071).

5. Specification Requirements: See *Standard Specifications* Section 9-16. Review contract documents to determine if supplemental specifications apply.

9-4.51 Beam Guardrail, Guardrail Anchors, and Glare Screen

1. Approval of Material: Approval of Material is required prior to use. This approval may either be by virtue of the inclusion of this materials/product on the Qualified Products List or by approval of a Request of Approval of Material (DOT Form 350-071). If approval is by means of QPL, be certain to verify that product is in fact qualified for its intended use, product is listed under appropriate specification.

2. Preliminary Samples: A preliminary sample of the material will be required only if requested on Request for Approval of Material (DOT Form 350-071).

3. Acceptance: Materials listed on the Qualified Products List may be accepted as outlined on the QPL or by Manufacturers Certificate of Compliance meeting the requirements of *Standard Specifications* Section 1-06.3 including supporting test reports.

4. Field Inspection: Check material delivered to the project for damage to galvanizing.

5. Specification Requirements: See *Standard Specifications* Section 9-16.3.

9-4.52 Guardrail Posts and Blocks

1. Approval of Material: Approval of material and treating facility is required prior to use. This Approval may either be by virtue of the inclusion of this material/product on the Qualified Products List or by approval of a Request for Approval of Material -DOT Form 350-071. If approval is by means of QPL, be certain to verify that product is in fact qualified for its intended use, product is listed under appropriate specification.

2. Preliminary Samples: A preliminary sample of the material will be required only if requested on the Request for Approval of Material (DOT Form 350-071).

3. Acceptance: Materials listed on the Qualified Products List may be accepted as outlined on the QPL. Materials not listed on the QPL will be accepted by “APPROVED FOR SHIPMENT” tag. Approved for shipment tags will be stapled to the ends of the timber. Only about one-third of the approved timber pieces will be tagged.

4. Field Inspection: Check material delivered to the project for conformance with the contract plan and specifications.

5. Specification Requirements: See Standard Plans.

9-4.53 Miscellaneous Precast Concrete Products (Block Traffic Curb, Precast Traffic Curb)

1. Approval of Material: Approval of material is required prior to use. This approval may either be by virtue of the inclusion of this material/product on the Qualified Products List or by approval of a Request for Approval of Material (DOT Form 350-071). If approval is by means of QPL, be certain to verify that product is in fact qualified for its intended use, product is listed under appropriate specification.

2. Preliminary Samples: A preliminary sample of the material will be required only if requested on Request for Approval of Material (DOT Form 350-071).

3. Acceptance: In general, the Materials Fabrication Inspection Office will not, undertake inspection of these products. When large quantities are involved, the Regional Administrator should arrange for inspection during manufacturer, including the sampling of materials and the making of test cylinders.

a. Precast Traffic Curb — Acceptance on field inspection. Unless the curb sections have been inspected prior to shipping they are to be carefully inspected upon arrival on the project site. Check for surface color and damage, such as cracks, broken corner or edges, contour and alignment. Surface color and texture should match advanced sample provide by the manufacturer. See Standard Plans for details.

b. Block Traffic Curb — Acceptance on visual inspection. Check exposed faces of curb sections for damage such as chips, cracks, and air holes. See *Standard Specifications* Section 9-18.3 for details. Compressive strength may be determined in accordance with the FOP for ASTM C 805.

4. Field Inspection: Check for damage due to shipping and handling.

5. Specification Requirements: See *Standard Specifications* Sections 9-18. Review contract documents to determine if supplemental specifications apply.

9-4.54 Prestressed Concrete Products

1. Approval of Material: Approval of fabricator and materials are required prior to use. This approval may either be by virtue of the inclusion of this material/product on the Qualified Products List or by approval of a Request for Approval of Material (DOT Form 350-071). Notify Materials Fabrication Inspection Office of need to provide Inspection Services, or to verify that the prestress plants annual review and approval is current.

2. Preliminary Samples: A preliminary sample of the material will be required only if requested on Request for Approval of Material (DOT Form 350-071).

3. Acceptance: Acceptance will be based on "APPROVED FOR SHIPMENT" stamp or tags (Figure 9-4 or 9-5) from Materials Fabrication Inspection Office inspection and on field inspection for damage due to shipping and handling.

4. Field Inspection: Check for damage due to shipping and handling. Check and record "APPROVED FOR SHIPMENT" stamp or tag (Figure 9-4 or 9-5).

5. Specification Requirements: See *Standard Specifications* Section 6-02.3(25), 6-03.3(25), 6-03.3(28), and Section 9-19. Review contract documents to determine if supplemental specifications apply.

9-4.55 Raised Pavement Markers, Types 1, 2, and 3

1. Approval of Material: Approval of materials is required prior to use. This approval may either be by virtue of the inclusion of this material/product on the Qualified Products List or by approval of a Request for Approval of Material (DOT Form 350-071). If approval is by means of QPL, be certain to verify that product is in fact qualified for its intended use, product is listed under appropriate specification.

2. Preliminary Samples: A preliminary sample of the material will be required only if requested on Request for Approval of Material (DOT Form 350-071).

3. Acceptance:

   a. Type 1 Markers.

   b. Plastic Markers: Shall be from tested and approved lots identified with an "APPROVED FOR SHIPMENT" stamp (Figure 9-4). After use, all emptied, marked boxes shall be destroyed.

   c. Thermoplastic Markers: Markers listed on the QPL may be accepted based on visual inspection as to brand and model listed. Verification samples of Type 1 thermoplastic markers are required for each lot used on a project. A sample shall consist of three markers per job lot (from different boxes) for each color.

   d. Type 2 Markers: Only markers listed on the QPL may be accepted, visually inspect markers as to brand and model listed.

   e. Type 3 Markers: Only markers listed on the QPL may be accepted, visually inspect markers as to brand and model listed.

4. Field Inspection: A visual inspection shall be made to ensure that cracked or damaged lane markers are not incorporated in the work.

5. Specification Requirements: See *Standard Specifications* Section 9-21. Review contract documents to determine if supplemental specifications apply.

9-4.56 Signing Materials

1. Approval of Material: Approval of the sign fabricator as well as the manufacturer of the sign blanks and panels and the reflective sheeting is required prior to use. This approval may either be by virtue of the inclusion of this material/product on the Qualified Products List or by approval of a Request for Approval of Material (DOT Form 350-071). If approval is by means of QPL, be certain to verify that product is in fact qualified for its intended use, product is listed under appropriate specification. Notify the Sign Fabrication Inspector of need to provide Inspection Services.

2. Preliminary Samples: A preliminary sample of the material may be requested on the Request for Approval of Material (DOT Form 350-071), or as requested by the Sign Fabricator Inspector.

3. Acceptance: Materials and fabrication will be accepted on "FABRICATION APPROVED" decal (Figure 9-8).

   a. Sign Blanks: As soon as the fabricator receives the materials, the Sign Fabricator Inspector will check the accompanying mill test certificates to ensure the materials meet contract requirements. These will accompany the Sign Acceptance Report.

   b. Reflective Sheeting: The Sign Fabricator Inspector will check the Manufacturer's Certificate of Compliance for the reflective sheeting and the cutout legend to ensure the materials meet contract requirements. These will be kept at the point of sign fabrication.

4. Field Inspection: Check for a "FABRICATION APPROVED" decal (Figure 9-8) on the back of the sign. Check for damage due to shipping, handling, and installation.

5. Specification Requirements: See *Standard Specifications* Section 9-28, and Section 9-1.5G of this manual. Review contract documents to determine if supplemental specifications apply.

9-4.57 Concrete Curing Compounds

1. Approval of Material: Approval of materials is required prior to use. This approval may either be by virtue of the inclusion of this material/product on the Qualified Products List or by approval of a Request for Approval of Material (DOT Form 350-071). If approval is by means of QPL, be certain to verify that product is in fact qualified for its intended use, product is listed under appropriate specification.

2. Preliminary Samples: A preliminary sample of the material will be required only if requested on Request for Approval of Material (DOT Form 350-071).

3. Acceptance: Submit 1 quart (1 liter) for each lot of curing compound delivered to each project. Material will be accepted based on "SATISFACTORY" test results from the FOSSC Materials Laboratory on samples taken from the project. No curing compound shall be used on WSDOT work prior to testing of each lot. Samples must be submitted for testing 14 days prior to use of curing compound.

4. Field Inspection: Check different lots for similarity in appearance and working properties. Check that the lots being used have "Satisfactory" test reports from FOSSC Materials Laboratory.

5. Specification Requirements: See *Standard Specifications* Sections 9-23. Review contract documents to determine if supplemental specifications apply.

9-4.58 Admixtures for Concrete

1. Approval of Material: Approval of material is required prior to use. This approval may either be by virtue of the inclusion of this material/product on the Qualified Products List or by approval of a Request for Approval of Material (DOT Form 350-071). If approval is by means of QPL, be certain to verify that product is in fact qualified for its intended use, product is listed under appropriate specification.

2. Preliminary Samples: A preliminary sample of the material will be required only if requested on Request for Approval of Material (DOT Form 350-071).

3. Acceptance: Acceptance will be on the basis of Certified Concrete Delivery Ticket, *Standard Specifications* Section 6-02.3(5)B, indicating the brand/product and dosage of the admixture as shown on the concrete mix design.

4. Field Inspection: Check Concrete Delivery Ticket for proper admixture usage. Verify the materials received on the job site, is in fact the same make, model, lot, batch, size, color, blend, etc. as approved for use, be it by QPL or via the Request for Approval of Material (DOT Form 350-071).

5. Specification Requirements: See *Standard Specifications* Section 6-02.3(5) B and 9-23. Review contract documents to determine if supplemental specifications apply.

9-4.59 Plastic Waterstop

1. Approval of Material: Approval of material is required prior to use. This approval may either be by virtue of the inclusion of this material/product on the Qualified Products List or by approval of a Request for Approval of Material (DOT Form 350-071). If approval is by means of QPL, be certain to verify that product is in fact qualified for its intended use, product is listed under appropriate specification.

2. Preliminary Samples: A preliminary sample of the material will be required only if requested on Request for Approval of Material (DOT Form 350-071).

3. Acceptance: Material may be accepted on basis of Manufacturer's Certificate of Compliance.

4. Field Inspection: Check for uniformity of product in lot, and for damage in shipment or handling. Verify the materials received on the job site, is in fact the same make, model, lot, batch, size, color, blend, etc. as approved for use, be it by QPL or via the Request for Approval of Material (DOT Form 350-071).

5. Specification Requirements: See *Standard Specifications* Section 9-24. Review contract documents to determine if supplemental specifications apply.

9-4.60 Epoxy Resins

1. Approval of Material: Approval of material is required prior to use. This approval may either be by virtue of the inclusion of this material/product on the Qualified Products List or by approval of a Request for Approval of Material (DOT Form 350-071). If approval is by means of QPL, be certain to verify that product is in fact qualified for its intended use, product is listed under appropriate specification.

2. Preliminary Samples: A preliminary sample of the material will be required only if requested on Request for Approval of Material (DOT Form 350-071).

3. Acceptance: Material may be accepted on receipt of "SATISFACTORY" test report from the FOSSC Materials Laboratory. Submit mix ratios, intended use, and sufficient component materials to produce 1 quart (1 liter) of the mixture for each batch or lot number. Lane Marker epoxy does not require field sampling; the supplier shall send samples to the FOSSC Materials Laboratory.

4. Field Inspection: Check for uniformity of color and conformance to required mix proportions. Streaking is an indication of inadequate mixing. Check for set and hardness with your thumbnail. You should not be able to dent the properly mixed and cured material. Synthetic binders shall be mixed and applied in conformance to manufacturer's written instructions unless otherwise modified in writing by the manufacturer's agent. Verify the materials received on the job site, is in fact the same type, grade, and class, etc., as approved for use, be it by QPL or via the Request for Approval of Material (DOT Form 350-071).

5. Specification Requirements: See *Standard Specifications* Section 9-26. Review contract documents to determine if supplemental specifications apply.

9-4.61 Resin Bonded Anchors

1. Approval of Material Prior to Use: Approval of material is required prior to use. This approval may either be by virtue of the inclusion of this material/product on the Qualified Products List or by approval of a Request for Approval of Material (DOT Form 350-071). If approval is

by means of QPL, be certain to verify that product is in fact qualified for its intended use, product is listed under appropriate specification.

2. Preliminary Samples: A preliminary sample of the material will be required only if requested on Request for Approval of Material (DOT Form 350-071).

3. Acceptance:

a. Qualified Product Listed Product: If Product is listed on QPL, the acceptance of the resin adhesive shall be by field acceptance procedures documenting that brand and model of the resin system. Threaded rod, nut and washer or other inserts shall be accepted on the basis of a Manufacturer's Certificate of Compliance with supporting Mill Test Reports indicating they meet the contract requirements.

b. Non-qualified Product Listed Product: Submit independent test lab data indicating resin system meets specifications when tested in accordance with ASTM E488, and threaded rod, nut and washer or other inserts shall be accepted on the basis of a Manufacturer's Certificate of Compliance with supporting Mill Test Reports indicating they meet the contract requirements.

4. Field Inspection: Check for proper embedment depths, check that holes are properly cleaned. Check that the installation is in accordance with the manufacturers written instructions.

5. Specification Requirements: Review contract documents to determine if supplemental specifications apply.

9-4.62 Gabion Baskets

1. Approval of Material: Approval of material is required prior to use. This approval may either be by virtue of the inclusion of this material/product on the Qualified Products List or by approval of a Request for Approval of Material (DOT Form 350-071). If approval is by means of QPL, be certain to verify that product is in fact qualified for its intended use, product is listed under appropriate specification.

2. Preliminary Samples: A preliminary sample of the material will be required only if requested on Request for Approval of Material (DOT Form 350-071). The sample shall consist of the following:

a. One square yard (meter) of mesh including selvage and body wire.

b. Three feet (1 meter) of tie wire.

c. Three feet (1 meter) of lacing wire.

d. Six each wire clips, fasteners.

3. Acceptance: Acceptance is based on receipt of a Manufacturer's Certificate of Compliance with accompanying Mill Test Report.

4. Field Inspection: Check for damage.

5. Specification Requirements: See *Standard Specifications* Section 9-27.3. Review control documents to determine if supplemental specifications apply.

9-4.63 Sign Structures

1. Approval of Material: Approval of Material: Approval of the fabricator as well as the manufacturer of the steel is required prior to use. Upon receipt of the "Request for Approval of Material," the Materials Fabrication Inspection Office will inspect the fabrication shop to ensure it meets all contract requirements. A copy of the Request for Approval of Material will be sent to the Materials Fabrication Inspection Office.

2. Preliminary Samples: A preliminary sample of the material will be required only if requested on Request for Approval of Material (DOT Form 350-071).

3. Acceptance: The fabricated sign structure will be accepted on the basis of an "APPROVED FOR SHIPMENT" stamp (Figure 9-8). When the structures are fabricated out-of-state and are shipped directly to the job site, arrangements must be made with the Materials Fabrication Inspection Office to have the structures inspected prior to erection.

4. Field Inspection: Check for "APPROVED FOR SHIPMENT" stamp (Figure 9-8) and damage due to shipping, handling and erection.

5. Specification Requirements: See design standards and *Standard Specifications* Section 9-28.15. Review contract documents to determine if supplemental specifications apply.

9-4.64 Conduit

1. Approval of Material: Approval of materials is required prior to use. This approval may either be by virtue of the inclusion of this material/product on the Qualified Products List or by approval of a Request for Approval of Material (DOT Form 350-071). If approval is by means of QPL, be certain to verify that product is in fact qualified for its intended use, product is listed under appropriate specification.

2. Preliminary Samples: A preliminary sample of the material will be required only if requested on Request for Approval of Material (DOT Form 350-071).

3. Acceptance: If using the QPL, be sure to verify appropriate means of acceptance, see applicable Acceptance Code within the QPL.

a. Galvanized conduit shall be accepted on receipt of "SATISFACTORY" test reports from FOSSC Materials Laboratory for each size and shipment. Each sample requires two 12-inch (300-mm) sections, one from each end of a standard length of conduit. Re-sampling, when directed, requires twice the number of pieces specified. Be sure that matching end pieces are identified.

The Project Engineer may accept galvanized conduit based on nondestructive testing according to the FOP for ASTM D 1186.

b. Fiber reinforced plastic, flexible, and plastic conduit shall be accepted on Manufacturer's Certificate of Compliance or on catalog cuts.

4. Field Inspection: Verify the materials received on the job site, is in fact the same make, model, lot, batch, size, color, blend, etc. as approved for use, be it by QPL or via the Request for Approval of Material (DOT Form 350-071). Check for Underwriters approval labels. Check for damage to coatings in shipping and handling, and see that damaged areas and field cut threads are protected with an approved coating.

5. Specification Requirements: See *Standard Specifications* Section 9-29.1. Review contract documents to determine if supplemental specifications apply.

9-4.65 Electrical Conductors

1. Approval of Material: Approval of materials is required prior to use. This approval may either be by virtue of the inclusion of this material/product on the Qualified Products List or by approval of a Request for Approval of Material (DOT Form 350-071). If approval is by means of QPL, be certain to verify that product is in fact qualified for its intended use, product is listed under appropriate specification.

2. Preliminary Samples: A preliminary sample of the material will be required only if requested on Request for Approval of Material (DOT Form 350-071). A sample shall consist of 15 feet (5 meters).

3. Acceptance: Conductors shall be accepted upon receipt of "Satisfactory" Test Report from FOSSC Materials Laboratory.

a. Single Conductors: If using the QPL, be sure to verify appropriate means of acceptance, see applicable Acceptance Code within the QPL. For wire manufacturers not listed in the QPL, submit a sample. A sample shall be a length of wire that shall include the complete printed/stamped designation: manufacturer, size, and insulation type.

b. Multiple Conductors: If using the QPL, be sure to verify appropriate means of acceptance, see applicable Acceptance Code within the QPL. For wire/cable manufacturers not listed in the QPL, submit a sample. A sample shall be a length of wire that shall include the complete printed/stamped designation: manufacturer, size, and insulation type.

c. Fiber Optic Cable. A sample of the Fiber Optic cables shall be a minimum 2 feet (600 mm) long.

4. Field Inspection: Verify the materials received on the job site, is in fact the samemake, model, lot, batch, size, color, blend, etc. as approved for use, be it by QPL or via the Request for Approval of Material (DOT Form 350-071). A visual inspection shall be made to ensure that no conductors with damaged insulation are incorporated into the project.

5. Specification Requirements: See *Standard Specifications* Section 9-29.3. Review Contract Documents to determine if supplemental requirements apply.

9-4.66 Signal, Luminaire, and Strain Poles

1. Approval of Material: Approval of materials is required prior to use. This approval may either be by virtue of the inclusion of this material/product on the Qualified Products List or by approval of a Request for Approval of Material (DOT Form 350-071). If approval is by means of QPL, be certain to verify that product is in fact qualified for its intended use, product is listed under appropriate specification. Notify Materials Fabrication Inspection Office of need to provide Inspection Services.

2. Preliminary Samples: A preliminary sample of the material will be required only if requested on Request for Approval of Material (DOT Form 350-071).

3. Acceptance: If poles were inspected prior to shipment to job site, they will be stamped "APPROVED FOR SHIPMENT" (Figure 9-4). If not, poles must be inspected and approved at the job site by the Materials Fabrication Inspection Office prior to installation. Acceptance will be based on approved shop drawings per Chapter 8-20.2B of this manual, Mill Test Certificates supplied by the manufacturer.

4. Field Inspection: Check for "APPROVED FOR SHIPMENT" stamp (Figure 9-4) and damage due to shipping, handling and erection. Arrange for inspection if not tagged.

5. Specification Requirements: See *Standard Specifications* Section 9-29.6. Review contract documents to determine if supplemental specifications apply.

9-4.67 Anchor Bolts for Luminaire, Signal Poles, and Sign Structures

1. Approval of Material: Approval of materials and fabricator are required prior to use. This approval may either be by virtue of the inclusion of this material/product on the Qualified Products List or by approval of a Request for Approval of Material (DOT Form 350-071). If approval is by means of QPL, be certain to verify that product is in fact qualified for it's intended use, product is listed under appropriate specification. Notify Materials Fabrication Inspection Office of need to provide Inspection Services.

2. Preliminary Samples: A preliminary sample of the material will be required only if requested on Request for Approval of Material (DOT Form 350-071)

3. Acceptance: Acceptance may be based on "APPROVED FOR SHIPMENT" tag and/or stamp (Figure 9-4 or 9-5).

The ID number on the tags that is attached to the bundles of anchor bolts will be stamped on a representative number of anchor bolts.

4. Field Inspection: Check and record the "APPROVED FOR SHIPMENT" tag and/or stamp (Figure 9-4 or 9-5). Check for damage due to shipping and handling.

Note: Special attention shall be placed on the proper installation of bolts. No adjustments (bending) of bolts will be allowed after placement in concrete.

5. Specification Requirements: See *Standard Specifications* Section 9-29.6(5). Review contract documents to determine if supplemental specifications apply.

9-4.68 Luminaires and Lamps

1. Approval of Material: Approval of materials is required prior to use. This approval may either be by virtue of the inclusion of this material/product on the Qualified Products List or by approval of a Request for Approval of Material (DOT Form 350-071). If approval is by means of QPL, be certain to verify that product is in fact qualified for its intended use, product is listed under appropriate specification.

2. Preliminary Samples: Preliminary samples will be required only if requested on Request for Approval of Material (DOT Form 350-071). Submit Manufacturers Certificate of Compliance and catalog cut to the FOSSC Materials Laboratory for evaluation if requested.

3. Acceptance: Verify the materials received on the job site, is in fact the same make, model, lot, batch, size, color, blend, etc. as approved for use, be it by QPL or via the Request for Approval of Material (DOT Form 350-071).

4. Field Inspection:

   a. Luminaires: A visual inspection shall be made to ensure damaged equipment is not installed and that luminaires are mounted level. Confirm the socket position is the same as that noted on the catalog cut.

   b. Lamps for Luminaires and Signal Heads: Check that all lamps are of the proper wattage, see contract documents.

5. Specification Requirements: See *Standard Specifications* Section 9-29.10. Review contract documents to determine if supplemental specifications apply.

9-4.69 Water Distribution System

1. Approval of Material: Approval of material is required prior to use. This approval may either be by virtue of the inclusion of this material/product on the Qualified Products List or by approval of a Request for Approval of Material (DOT Form 350-071). If approval is by means of QPL, be certain to verify that product is in fact qualified for its intended use, product is listed under appropriate specification.

2. Preliminary Samples: A preliminary sample of the material will be required only if requested on Request for Approval of Material (DOT Form 350-071).

3. Acceptance: The water distribution material listed below may be accepted based upon compliance with the following acceptance criteria. If using the QPL, be sure to verify appropriate means of acceptance, see applicable Acceptance Code within the QPL.

   a. Ductile Iron Pipe - Manufacturer's Certificate of Compliance

   b. Steel Pipe (4 inches (100 mm) and under) – Manufacturer's Certificate of Compliance

   c. Steel Pipe (6 inches (150 mm) and larger) – Manufacturer's Certificate of Compliance

   d. Polyvinyl Chloride (PVC) Pipe (4 inches (100 mm) and over) – Manufacturer's Certificate of Compliance

   e. Polyvinyl Chloride (PVC) Pipe (4 inches (100 mm) and under) – Manufacturer's Certificate of Compliance

   f. Ductile Iron Pipe Fittings – Approved Catalog Cut

   g. Steel Pipe (4 inches (100 mm) and under) Fittings – Approved Catalog Cut

   h. Steel Pipe (6 inches (150 mm) and larger) Fittings – Approved Catalog Cut

   i. Polyvinyl Chloride (PVC) Pipe (4 inches (100 mm) and over) Fittings – Approved Catalog Cut

   j. Polyvinyl Chloride (PVC) Pipe (4 inches (100 mm) and under) Fittings – Approved Catalog Cut

   k. Restrained Joints – Approved Catalog Cut

   l. Bolted, Sleeve-Type Couplings for Plain End Pipe – Approved Catalog Cut

   m. Restrained Flexible Couplings – Approved Catalog Cut

   n. Gate Valves (3 to 12 inches (75 to 300 mm)) – Approved Catalog Cut

   o. Gate Valves (14 to 16 inches (350 to 400 mm)) – Approved Catalog Cut

   p. Butterfly Valves – Approved Catalog Cut

   q. Valve Boxes – Approved Catalog Cut

   r. Valve Marker Post – Approved Catalog Cut

   s. Valve Stem Extension – Approved Catalog Cut

   t. Combination Air Release/Air Vacuum Valves– Approved Catalog Cut

   u. Tapping Sleeve and Valve Assembly – Approved Catalog Cut

   v. Hydrants – Approved Catalog Cut

   w. Hydrant End Connections – Approved Catalog Cut

   x. Hydrant Dimensions – Approved Catalog Cut

   y. Hydrant Extensions – Approved Catalog Cut

   z. Hydrant Restraints – Approved Catalog Cut

   aa. Traffic Flange – Approved Catalog Cut

   bb. Guard Posts – Approved Catalog Cut

   cc. Service Connection — Saddles – Approved Catalog Cut

   dd. Service Connection — Corporation Stops – Approved Catalog Cut

ee. Service Connection — Service Pipe (Copper) – Approved Catalog Cut

ff. Service Connection — Service Pipe (Polyethylene) – Approved Catalog Cut

gg. Service Connection — Service Fittings – Approved Catalog Cut

hh. Service Connection — Meter Setters – Approved Catalog Cut

ii. Service Connection — Bronze Nipples and Fittings – Approved Catalog Cut

jj. Service Connection — Meter Boxes – Approved Catalog Cut

4. Field Inspection: Verify the materials received on the job site, is in fact the same make, model, lot, batch, size, color, blend, etc. as approved for use, be it by QPL or via the Request for Approval of Material (DOT Form 350-071). Check material delivered to the project for damage to the galvanized coatings in shipping and handling and conformance to the contract documents. See that damaged areas and field cut threads are protected with an approved galvanized repair paint formula, standard formula A-9-73. Water distribution pipe requires testing after installation in conformance with the *Standard Specifications* Section 7-11.3.

5. Specification Requirements: See *Standard Specifications* Section 9-30. Review contract documents to determine if supplemental specifications apply.

9-4.70 Elastomeric Bearing Pads

1. Approval of Material: Approval of material is required prior to use. This approval may either be by virtue of the inclusion of this material/product on the Qualified Products List or by approval of a Request for Approval of Material (DOT Form 350-071).

2. Preliminary Samples: A preliminary sample of the material will be required only if requested on Request for Approval of Material (DOT Form 350-071).

3. Acceptance: Material may be accepted on a Manufacturer's Certificate of Compliance accompanied by a certified test report identifying the specific batch of material and conforming to AASHTO M251.

4. Field Inspection: Make certain that material to be used is from the certified batch.

5. Specification Requirements: See *Standard Specifications* Section 9-31. Review contract documents to determine if supplemental specifications apply.

9-4.71 Fabric Bearings Pad

1. Approval of Material: Approval is required for the fabricator and all material components of the bearings prior to the start of fabrication. For approved plants in Washington State, or the need for inspection, contact the Materials Fabrication Inspection Office.

2. Preliminary Samples: A preliminary sample of the material will be required only if requested on Request for Approval of Material (DOT Form 350-071).

3. Acceptance: All Fabric Bearing Pads need to be inspected prior to installation. If the fabricator is within Washington State, than the bearing pad will be inspected at the fabrication plant and stamped "Approved for Shipment", see Figure 9-4. If the Fabric Bearing Pads are fabricated outside of Washington State, than the bearing pad will need to be inspected on site by the Materials Fabrication Inspection Office.

The Project Engineer shall collect all of the documentation and Test Reports for the various material items used in the Manufacturing of the Fabric Pad Bearing as listed below. Copies of these documents and test reports shall be sent to the Materials Fabrication Inspection Office prior to inspection.

a. Polytetrafluorethylene (TFE) sheeting, fabric pads, and elastomer — Manufacturer's Certificate of Compliance.

b. Steel Plates and shapes including stainless steel — Manufacturer's Certificate of Compliance.

c. TFE and stainless steel coefficient of friction requirements — Certified Test Reports from independent testing laboratory.

d. Sample of preformed fabric pad — "SATISFACTORY" Test Report from the FOSSC Materials Laboratory.

4. Field Inspection: Check for damage caused by shipping and handling.

5. Specification Requirements: Review the contract documents to determine the specification requirements.

9-4.72 Precast Concrete Barrier and Wall Panels

1. Approval of Material: Approval of fabricator is required prior to the start of fabrication. This approval may either be by virtue of the inclusion of this material/product on the Qualified Products List or by approval of a Request for Approval of Material (DOT Form 350-071). Notify Fabrication Office of need to provide Inspection Services, or to verify that the precast plants annual review and approval is current for wall panels only.

2. Preliminary Samples: A preliminary sample of the material will be required only if requested on Request for Approval of Material (DOT Form 350-071).

3. Acceptance: Accept only barrier sections that are stamped "WSDOT INSPECTED" (Figure 9-3). Accept only wall panels, which are stamped "APPROVED FOR SHIPMENT" (Figure 9-4).

4. Field Inspection: Check for shipping and handling damage and "APPROVED FOR SHIPMENT" stamp or "WSDOT INSPECTED" stamp.

5. Specification Requirements: See *Standard Specifications* Section 6-10), 6-03.3(25), and 6-03.3(28). Review contract documents to determine if supplemental specifications apply.

9-4.73 Safety Bars, Cattle Guards, Sign Mounting Brackets, Steel and Special Guardrail Posts, Steel Sign Posts

1. Approval of Material: Approval of fabricator is required prior to the start of fabrication. This approval may either be by virtue of the inclusion of this material/product on the Qualified Products List or by approval of a Request for Approval of Material (DOT Form 350-071). If fabrication or welding of the item is needed, contact the Materials Fabrication Inspection Office for disposition and possible inspection.

2. Preliminary Samples: A preliminary sample of the material will be required only if requested on Request for Approval of Material (DOT Form 350-071).

3. Acceptance: Materials may be accepted on receipt of Manufacturer's Certificate of Compliance for the base metal including Mill Test Certificates.

4. Field Inspection: Check each lot of material deliveredto the project for damage, and that accompanying Manufacturer's Certificate of Compliance is present. Check galvanizing using procedures stated in FOP for ASTM D 1186. Identify lots with test reports. Check for handling or shipping damage.

5. Specification Requirements: See *Standard Specifications* Section 9-05.18, 9-16.3(2), 9-28.15(1) and Standard Plans. Review contract documents to determine if supplemental specifications apply.

9-4.74 Metal Bridge Rail

1. Approval of Material: Approval of fabricator is required prior to the start of fabrication. This approval may either be by virtue of the inclusion of this material/product on the Qualified Products List or by approval of a Request for Approval of Material (DOT Form 350-071). Notify Fabrication Office of need to provide Inspection Services.

2. Preliminary Samples: A preliminary sample of the material will be required only if requested on Request for Approval of Material (DOT Form 350-071).

3. Acceptance: If rails were inspected prior to shipment to job site, they will be stamped or tagged "APPROVED FOR SHIPMENT" (Figure 9-4 or 9-5). If not, rails must be inspected on job site by the Materials Fabrication Inspection Office prior to installation. Acceptance will be based on approved shop drawings per Chapter 8-20.2B of this manual, Mill Test Certificates supplied by the manufacturer.

4. Field Inspection: Check for "APPROVED FOR SHIPMENT" tags or stamp. Check for damage caused by shipping and handling. Unless aluminum parts have been adequately wrapped, there may be damage to anodic and lacquer coating. Damaged parts shall be rejected.

5. Specification Requirements: See *Standard Specifications* Section 6-06.3(2). Review contract documents to determine if supplemental specifications apply.

9-4.75 Construction Geotextiles

1. Approval of Material: Approval of materials is required prior to use. This approval may either be by virtue of the inclusion of this material/product on the Qualified Products List or by approval of a Request for Approval of Material (DOT Form 350-071). If approval is by means of QPL, be certain to verify that product is in fact qualified for its intended use, product is listed under appropriate specification.

2. Preliminary Samples: A preliminary sample of the material will be required only if requested on Request for Approval of Material (DOT Form 350-071).

3. Acceptance:

   a. Satisfactory test reports from the FOSSC Materials Laboratory when quantities exceed the limits stated in *Standard Specification* Section 9-33.4(4). Sample per WSDOT Test Method 914. A Manufacturer's Certificate of Compliance MUST accompany all samples submitted for testing.

   b. Acceptance may be on Manufacturer's Certificate of Compliance when quantities are within the limits stated in *Standard Specification* Section 9-33.4(4).

4. Field Inspection: Check each roll of geotextile fabric for proper identification as shown on either the Manufacturer's Certificate of Compliance or on the FOSSC Materials Laboratory test report. Verify the materials received on the job site, is in fact the same make, model, lot, batch, size, color, blend, etc. as approved for use, be it by QPL or via the Request for Approval of Material (DOT Form 350-071).

5. Specification Requirements: See *Standard Specifications* Sections 9-33. Review contract documents to determine if supplemental specifications apply.

9-4.76 Concrete

1. Approval of Material: Approval of all materials is required prior to use.

   Cement — see Section 9-4.1
   Fine Aggregate (sand) — see Section 9-4.4
   Coarse Aggregate — see Section 9-4.4
   Admixtures for Concrete — see Section 9-4.58
   Water — see Section 9-4.77

Contractor must submit a concrete mix design on DOT Form 350-040. All concrete except commercial and Lean Concrete must come from a pre-qualified Batch Plant. Contact the Regional Materials Engineer to determine if plant is pre-qualified.

For mix designs proposed for cement concrete pavement the contractor is required to submit flexural and compressive strength test results in accordance with Section 5-05 of the *Standard Specifications* as part of the concrete mix design.

Note: If the Aggregate Sources Tacking System requires Alkali Silica Reaction (ASR) mitigation the concrete mix design submittal may include the use of either a low alkali cement per section 9-01.3(3), or fly ash per 9-23.9, as approved by the Engineer. The contractor shall provide test results for ASTM C 1260 or AASHTO T 303 showing the mitigating measures are effective (see Section 9-03 of the *Standard Specifications*). If Fly Ash is proposed for use the contractor must also provide test results for ASTM C 441 showing that the Fly Ash does not make the ASR worse. Contact the General Materials Engineer of the FOSSC Materials Laboratory or the Olympia Service Center's Bridge Construction Engineer if the contractor is proposing to use other mitigating measures.

2. Preliminary Samples: Not Required

3. Acceptance:

   a. Commercial and Lean Concrete: Is accepted based on a Certificate of Compliance to be provided by the supplier as described in Section 6-02.3(5) B of the *Standard Specifications*.

   b. Cement Concrete Pavement: Is accepted based on satisfactory field tests for air content and compressive strength (see Section 9-5 of this manual for testing frequency).

   c. Structural Concrete: Is accepted based on tests for Slump, Air Content, Compressive Strength, and Temperature (see *Standard Specifications* Section 6-02.3(5)G for testing frequency).

4. Field Inspection: The concrete mix provided shall match the mix the contractor submitted for review. The Mix design submittal shall include the Aggregate Correction Factor to be used in determining the Air Content, if the contractor fails to provide this information on DOT form 350-040 do not apply an aggregate correction factor.

5. Specification Requirements: See *Standard Specifications* Section 9-03.1, 5-05 and 6-02.

9-4.77 Water for Concrete

1. Approval of Material: Not required.

2. Preliminary Samples: Not required.

3. Acceptance: Is based on test results provided by the contractor. If the Contractor is using potable water that is clear and apparently clean, then no testing is required.

   a. Physical Requirements: conducted on a weekly interval for the first four weeks and thereafter on monthly interval.

   b. Chemical Requirements: conducted on a monthly interval.

4. Field Inspection: See Section 9-4.75 concrete.

5. Specification Requirements: See *Standard Specifications* Section 9-25.1.

9-4.78 Expansion Joints

1. Approval of Material: Approval is required for the fabricator and all material components of the expansion joints prior to the start of fabrication. For approved plants in Washington State, or the need for inspection, contact the Materials Fabrication Inspection Office.

2. Preliminary Samples: A preliminary sample of the material will be required only if requested on Request for Approval of Material (DOT Form 350-071).

3. Acceptance: All expansion joints need to be inspected prior to installation. If the fabricator is within Washington State, than the expansion joints will be inspected at the fabrication plant and stamped "Approved for Shipment", see Figure 9-4. If the expansion joints are fabricated outside of Washington State, than the expansion joints will need to be inspected on site by the Materials Fabrication Inspection Office.

The Project Engineer shall collect all of the documentation from the out of state fabricator for the various material items used in the Manufacturing of the expansion joints as listed below. Copies of these documents shall be sent to the Materials Fabrication Inspection Office prior to inspection.

   a. Elastomeric expansion joint strip — Manufacturer's Certificate of Compliance

   b. Steel Plates and shapes including — Manufacturer's Certificate of Compliance

   c. Coatings for steel parts — Manufacturer's Certificate of Compliance

4. Field Inspection: Check for damage caused by shipping and handling.

5. Specification Requirements: Review contract documents to determine if supplemental specifications apply.

9-4.79 Controller Cabinet Assembly

1. Approval of Material: Approval of all components in the Controller Cabinet Assembly are required. This approval is conditional and may either be by virtue of the inclusion of this material/product on the Qualified Products List or by approval of a Request for Approval of Material (DOT Form 350-071). If approval is by means of QPL, be certain to verify that product is in fact qualified for its intended use, product is listed under appropriate specification.

2. Preliminary Samples: A preliminary sample of the individual components will be required only if requested on Request for Approval of Material (DOT Form 350-071).

3. Acceptance: Final acceptance is based on a satisfactory test report. A satisfactory test report is defined as acceptable performance in the following tests:

   WSDOT Test Method 421, Traffic Controller Inspection and Test Procedure

WSDOT Test Method 422, Transient Voltage Test (Spike Test) Procedure

WSDOT Test Method 423, Conflict Monitor Testing

WSDOT Test Method 424, Power Interruption Test Procedure

WSDOT Test Method 425, Environmental Chamber Test

4. Field Inspection: Verify the controller cabinet assembly received on the job site, has satisfactory test reports if required. Check for damage due to shipping and handling.

5. Specification Requirements: See *Standard Specifications* Section 9-29.13. Review contract documents to determine if supplemental specifications apply.

9-5 Guidelines for Job Site Control of Materials

9-5.1 General

When in doubt as to sampling requirements, refer to Record of Materials, (ROM), Request for Approval of Material, (RAM), and Chapter 9-4 of this manual. All items for acceptance, except for sampling and testing PCC cores, testing concrete cylinder and cement and as shown in Chapter 9-5.7 of this manual will be sampled and tested by the Project Engineers representative.

In some instances, certain items usually sampled by Project Engineers representative may be sampled and tested by representatives of the Field Operations Service Center Materials Laboratory or other representatives. Such items as shown in Chapter 9-1 of this manual, when properly identified with an "Approved for Shipment" tag, may be accepted for use by the Project Engineer without any further sampling or testing.

9-5.2 Sampling and Testing Schedule

9-5.2A General

The intent of sampling and testing is to ensure that the material provided to the project conforms to the specifications. The frequency schedule in Chapter 9-5.7 of this manual covers the minimum requirements for sampling and testing at the project level. The Project Engineer is responsible for obtaining the number of samples necessary to ensure adequate control of the material being produced under the circumstances and conditions involved with the particular project. In some instances, good construction practice will necessitate more frequent tests to ensure adequate control of the quality of production. This will be the case where production is just getting under way, where source material is variable or marginal in quality. Also operations from commercial sources when small lots of material are being sampled (as for barge loads of aggregate) or when stockpiles are built and depleted may require more frequent sampling and testing.

The instructions listed in Chapter 9-5.7 of this manual, will be followed in the production of those surfacing materials covered therein. A minimum of one acceptance test is required except for small quantities as shown in Chapter 9-5.2C of this manual.

9-5.2B Reducing Frequency of Testing

In instances of uniform production where the material is running well within specification limits, the Project Engineer may initiate deviations from the schedule. Deviations exceeding a 10 percent reduction will require approval from the Construction Materials Engineer at the FOSSC Materials Laboratory and must be documented in the project records, and fully explained by the Project Engineer. Lack of personnel, equipment, and facilities will not be considered sufficient reasons for such deviation.

Authority for approval of frequency reduction may be delegated to the Regional Materials Engineer upon request. This authority may permit overall reduction of sampling frequency or selective relief of selected test properties. Examples of selective relief would be reduction/elimination of fracture determinations for production from quarry sources or reduction of frequency for sand equivalent determination. As a general principle, frequency reduction may be considered whenever five consecutive samples taken at the normal frequency indicate full conformance with the specifications.

9-5.2C Sampling and Testing for Small Quantities of Materials

The Project Engineer may elect to accept small quantities of materials without meeting minimum sampling and testing frequencies using the following criteria.

An item can be accepted as a small quantity if the proposed quantity for a specific material is less than the minimum required frequency. For mainline paving, less than one-half the required frequency as defined in Chapter 9-5.7 of this manual.

Materials that will not be considered under the small quantity definition are:

Structural Concrete

Some issues that the Project Engineer may consider prior to use of small quantity acceptance are:

Has the material been previously approved?
Is the material certified?
Do we have a mix design or reference design?
Has it been recently tested with satisfactory results?
Is the material structurally significant?

Small quantity acceptance could be visual, by certification, or other methods. Acceptance of small quantities of materials by these methods must be documented. Documentation of materials under these methods must be provided by the Project Engineer or representative accepting the material. For visual documentation, an entry should be made in the project records as to the basis of acceptance of the material, and the approximate quantity involved.

The small quantity acceptance may be used for any quantity of the following uses:

Curbs and Sidewalks
Driveways
Road approaches
Paved ditches and slopes

9-5.3 Point of Acceptance

State Owned Source: Material produced from State owned source may be accepted either as it is placed into stockpile or as it is placed in hauling vehicles for delivery to the roadway. The sampling and testing frequency during stockpiling shall be in conformance with Chapter 9-5.7 of this manual.

In the event sample testing during stockpiling shows the material to be marginal (i.e., within tolerance limits) in any specification requirement, acceptance at this point shall be conditional and dependent on adherence to specifications at the time of removal from stockpile.

Contractor's Source: If stockpiled material is set aside exclusively for use on WSDOT projects it may be accepted the same as that for a state-owned source. If stockpiles are constructed for general use, then materials for WSDOT projects shall be tested for acceptance from samples taken by the Project Engineer representative in accordance with WSDOT FOP for AASHTO T 2. The Engineer will determine the exact point of acceptance. If an existing stockpile was built without acceptance testing during material production, and later set aside exclusively for use on state projects, the material may be accepted with appropriate test results from samples taken by the Project Engineer representative in accordance with WSDOT FOP for AASHTO T 2. The sampling and testing frequency shall conform to Chapter 9-5.7 of this manual.

9-5.4 Basis for Acceptance

The basis of acceptance of Hot Mix Asphalt and aggregates may be either by statistical evaluation or non- statistical evaluation methods. The method to be used is specified in *Standard Specifications* or Contract Documents.

The testing tolerances shown in Chapter 9-5.6 of this manual apply exclusively to the appropriate specifications as listed in the *Standard Specifications*. These tolerances do not apply to those "special" materials having requirements differing from those listed in the *Standard Specifications*. For these "special", materials usually described in the contract documents, tolerances will be provided by the Field Operations Support Service Center Materials Laboratory upon request from the Regional Construction Manager.

Material that has been produced prior to rejection (i.e., ACP in storage silo, crushed materials hauled to the job site) may be incorporated into the project provided the Contractor is made fully aware that the material may be subject to a price adjustment or, in extreme cases, to total removal. Every effort shall be made to place this material in structurally noncritical areas such as shoulders or gore areas.

All material produced between the time of rejection and the time an acceptable material is produced, as defined by WSDOT adopted testing procedures, shall not be incorporated in the work in any manner until it meets specifications.

9-5.4A Basis for Acceptance — Statistical Evaluation

For materials being accepted using statistical evaluation procedures, random samples will be evaluated to determine quality level within a defined tolerance band. Acceptance, bonus, and disincentive procedures are defined in the contract documents.

Test results with acknowledged errors or equipment deficiencies are to be immediately discarded without recourse and another sample run.

Test results for Hot Mix Asphalt may be challenged by the Contractor, as defined in the *Standard Specifications* Section 5-04.3(8)A3C. These specifications allow the Contractor to challenge results of any individual acceptance sample test in writing and within 5 days from receipt of the specified test results.

When the Contractor challenges a test, a split of the original field sample must be tested by different equipment and a different qualified tester. It therefore is necessary that a split of every field sample (i.e., opposite quarter from acceptance test) be saved in a secure area, accurately marked, and be available for challenge sample testing. The specifications require that the challenge sample testing be done in the Regional Materials Laboratory or the FOSSC Materials Laboratory. When the Contractor makes a challenge it is expected that the split sample be sent and tested as quickly as possible. This will require that testing of these samples be prioritized. By expediting the challenge sample testing, problems that may exist in testing or with the material being produced can be identified and corrected lessening the impact to both the Contractor and WSDOT.

9-5.4B Basis for Acceptance — Non-Statistical Evaluation

If statistical acceptance procedures are not specified nonstatistical acceptance method will be used.

Individual samples taken for acceptance by this method may be subject to certain tolerances allowed outside the established value stated in the *Standard Specifications*. The tolerance acceptance procedures shall be followed in these cases. Test results with acknowledged errors or equipment deficiencies are to be immediately discarded without recourse and another sample run.

When the test results for Hot Mix Asphalt fall outside the broad band specification limits the material will be evaluated according to the *Standard Specifications* Section 5-04.5(1)A.

The basis for acceptance of paving asphalt is compliance with existing specifications as modified to include the tolerance as follows:

1. If a sample fails to meet the required specifications, the samples prior and subsequent to the failed sample will be tested. Samples of paving asphalt will continue to be tested until samples taken both prior and subsequent to the failing samples meet the specifications. The quantity of out of specification ACP is determined from the tons of ACP represented by each of the paving asphalt samples that failed to meet the specifications.

2. If a sample does not meet the specifications but is not more than 10 percent outside the specification limits and the sample prior and subsequent to the out of specification made both meet the specifications, there will be no price adjustment.

3. If the sample is more than 10 percent out of specification or if the sample is less than 10 percent out of specification and either the sample prior or subsequent to does not meet the specifications, the ACP will be rejected.

The basis for acceptance of other materials is compliance with existing specifications as modified to include tolerances Established in Chapter 9-5.6 of this manual. The application of these tolerances shall be as follows:

1. Take the following actions any time a sample falls outside the specification limits, but within tolerance bands:

a. Immediately take two separate additional samples representing current production in accordance with Chapter 9-4 of this manual. The contractor has the option of making plant adjustments prior to taking these samples.

b. Production will be accepted until the second sample is checked for properties that were out of specification in the first sample.

c. Do not accept any additional material if the second sample is also out of specification.

d. If the second sample is within specification, immediately check the third sample. Do not accept any additional material if the third sample is out of specification.

e. No further material will be accepted after the time of rejection until corrections are made in the operations. This will be confirmed by new tests within specification limits.

f. Basis for acceptance after this correction will be in conformity with the procedure outlined above. All tests of material outside the specification limits must be listed and justified on the materials certification as required by Chapter 9-1.5 of this manual.

2. The acceptance of material shall cease with one or more of the following conditions:

a. When a sample falls outside of the applicable tolerance bands.

b. When any two out of three consecutive samples are within tolerance bands, but outside specification limits.

c. When any sample has a gradation that falls within both the high and low tolerance bands.

d. Any sample where the material is outside the specification limits, but within the tolerance bands, in any two of the following properties:

Gradation
Fracture
Sand Equivalent

9-5.5 Testing Staff Qualifications and Independent Assurance Program

9-5.5A Testing Staff Qualification

9-5.5A(1) General

WSDOT personnel assigned with testing construction materials will be enrolled in the Construction Tester Qualification Program. The details of this program are contained in this section. This program establishes uniform testing procedures, insures that testing staff is qualified in performing the testing procedures, and provides a regular review. The review process, through inspection by the Region Independent Assurance Inspector (IAI) evaluates the performance of all testing staff, recognizes proficient performance, and improves substandard performance by recommending corrective action. The qualification program extends the FOSSC Materials Laboratory accreditation principles. This includes the assignment, management, and review of project level testing using elements of the FOSSC Materials Laboratory accreditation program to accommodate an interface with region and, project level materials testing operations and the use and understanding of national standard test procedures such as AASHTO and ASTM, and other test procedures such as WAQTC and WSDOT.

9-5.5A(2) Construction Tester Qualification Rules

1. Responsibility: The construction tester qualification program requires detailed and specific attention to be paid to the testing procedures involved: The State Materials Engineer will address and resolve policy issues related to the qualification program.

2. Qualification Modules: The construction tester qualification modules have been set up in 5 areas of testing that represent most of the acceptance tests performed. The project acceptance testers will be evaluated for their proficiency in one or more of the construction tester qualification modules. Each module has a defined list of test procedures in which proficiency is evaluated, see Section 9-8 of this manual. The modules are listed as follows:

- Aggregates
- Hot-Mix Asphalt
- Structural Concrete
- Embankment and Base Density
- Asphalt Pavement Density

3. Qualification Categories: The tester can be qualified in one or more of three categories. The qualification categories are:

a. Module Qualified Tester: Fully proficient in a testing module, normally works independently with only general supervision and is responsible for determining material compliance.

b. Individual Method Qualified Tester: Has proficiency in one or more test procedures which may partially encompass methods in the qualification modules, but also extends to other infrequent acceptance procedures performed at the project level, and includes tests performed at the Regional or FOSSC Materials Laboratories.

c. Interim Qualified Tester: Basically proficient in one or more tests but, limited to an interim period of in-training work. Works under the close supervision of a module or individual method qualified tester, refer to Paragraph 5 below.

Testing personnel at the Region may be either Module Qualified, Individual Method Qualified, or Interim Qualified Testers. Per the AASHTO accreditation, the FOSSC Materials Laboratory personnel are Individual Method Qualified Testers.

4. Attaining Qualification:

a. Module Qualified Testers: To become a Module Qualified Tester the tester shall satisfactorily complete the required written tests and proficiency evaluations by the IAI, the Region Construction Trainer, or materials staff under the direction of the Materials Engineer in a field or region laboratory for one or more modules in the construction tester qualification program.

b. Individual Method Qualified Testers: To become a Individual Method Qualified Tester the tester shall satisfactorily complete the proficiency evaluation by the IAI, the Region Construction Trainer, or materials staff under the direction of the Materials Engineer. This can be accomplished in a field or region laboratory or FOSSC Materials Laboratory. Their qualification records reflect proficiency in the specific individual test methods.

c. Interim Qualified Testers: To become an Interim Qualified Tester, the following conditions have to be met:

(1) Individual study of the written test method(s) for a complete module,

(2) Test demonstration by a proficient tester,

(3) Allowance for practice or trial tests,

(4) Successful completion conforming to testing checklist(s) without coaching, and

(5) The Interim Qualified Tester works under close supervision by a Module or Individual Method Qualified Tester who is qualified in the same tests.

The conditions as described above, leading to interim qualification, may be conducted by another tester currently qualified in the module or test concerned. Based on evaluation of prior experience by the supervisor, with concurrence of the region IAI or Region Construction Trainer, a non-qualified tester may be considered to have the equivalent of conditions 1 through 3 above. An individual will be considered an interim qualified tester when successful testing performance conforming to the checklists has been completed in the presence of another qualified tester.

5. Supervision of Interim Qualified Testers: An Interim Qualified Tester works under the close supervision of a Module or Individual Method Qualified Tester that is qualified in the same test or module containing the test. Close supervision means that the Module or Individual Method Qualified Tester is physically present when the Interim Tester performs the test. The Module or Individual Method Qualified Tester must review and endorse all test results and determinations of material conformance.

6. Criteria for Evaluating Performance: Satisfactory performance constitutes performance conforming to the method checklist or with limited deviations corrected on the spot. Unsatisfactory performance consists of repeated infractions from previous evaluations, or incorrect performance of individual critical items, or of more than one-third of the items on an individual method checklist. Unsatisfactory evaluations shall be subject to region review.

7. Qualification of Evaluating Staff: Staff participating in evaluation of testers for qualification operate under the professional responsibility of the Regional Materials Engineer, and are not themselves required to be qualified testers.

8. Frequency of Equipment Verification: Regional laboratory and field laboratory test equipment will be verified annually, usually during the first quarter of the year, utilizing FOSSC equipment verification criteria. A tag bearing the year the verification expires will identify verified equipment.

9. Test procedures that are not included in the testing modules, shall be considered infrequently performed test procedures and shall be individual method qualified. For those procedures the Regional Material's Engineer, or his designated representative, will insure that the following process is employed in carrying out the procedure;

a. The employee responsible for performing the test will study the test method, after first determining that the procedure is the applicable current version.

b. The necessary test equipment will be assembled and confirmed as to its suitability and verification if required.

c. The employee will review how to conduct of the test with the supervisor and clarify any questions.

d. The test procedure will be performed in duplicate, using split portions of the test sample if possible. If not, a blank of other similar material will be run in duplicate prior to testing.

e. The results of the duplicate determination will be compared with the expected precision and bias determinations, if any, from the test procedure.

f. Lacking any defined basis of comparison, the results will be reported as the average of the two determinations with both the individual values and the average shown on the test report.

9-5.5A(3) Personnel Qualification Policy

1. All personnel performing acceptance testing will be either Module Qualified, Individual Method Qualified, or Interim Qualified Testers.

2. Module or Individual Method Qualified Tester designated as responsible for the performance of an Interim Qualified Tester must be in close contact, which means that the Module or Individual Method Qualified Tester is physically present when the Interim Tester performs the test. The Module or Individual Method Qualified Tester must review and endorse all test results and determinations of material conformance.

3. The Tester Qualification Tracking System will identify each tester, their specialty, level of qualification, and the results of ongoing evaluations. The IAI shall be the responsible person within the region for the accuracy of the information contained in the Tester Qualification Tracking System.

4. On-the-job performance will be evaluated by the IAI, the Region Construction Trainer, or materials staff under the direction of the Materials Engineer using the qualification checklists. Noted deficiencies will be reported in writing to the tester and his/her supervisor.

5. Supervisor action is required for notations of unsatisfactory performance.

6. The region tester performance review Chapter 9-5.5A(9) will consider continued qualification of individuals noted as deficient in performance. The supervisor shall submit to the Regional Materials Engineer the corrective action taken for unsatisfactory performance.

9-5.5A(4) Laboratory Qualifications Policy

A region or other subordinate laboratory to be considered qualified shall meet the following conditions:

1. Identify all test methods performed on a regular basis. Methods must conform to those established by WSDOT for materials acceptance.

2. Annually, verify laboratory and field test equipment, using FOSSC Materials Laboratory equipment verification criteria. An attached tag will identify the verified equipment.

3. Maintain staff qualification for all methods performed in the laboratory. Qualification shall be either by Module Qualified Tester or Individual Method Qualified tester.

4. Respond to the findings of the review program by FOSSC Materials Laboratory staff, modeled on AASHTO Materials Reference Laboratory (AMRL) inspection program. Such reviews shall be conducted at least biennially.

5. Non-WSDOT contracting laboratories having an equipment calibration/verification policy, and a technician training and evaluation process meeting the requirements of AASHTO R-18 may be used to conduct acceptance testing. Documentation of equipment calibration/verification and tester qualification shall be maintained and available for review by the Contracting Agency upon request. The Contracting Agency may conduct an on site review of the laboratory facilities, witness the tester performing the tests, verify the testing equipment, and review records when deemed necessary.

9-5.5A(5) Construction Tester Qualification Program

1. Qualifications:

a. Module Qualified Tester: Qualification in a module will require satisfactory completion of a written exam, followed by hands-on performance of testing procedures. Written examinations require an overall score of 70 percent, with not less than 60 percent on each method for satisfactory completion. Performance examination requires satisfactory performance in the presence of the Independent Assurance Inspectors, the Construction Trainers, or materials staff of all checklist steps, in sequential order, in each required method.

b. Individual Method Qualified Tester: Qualification in an individual method requires satisfactory completion of hands-on performance of the testing procedures in the presence of the Independent Assurance Inspectors, the Construction Trainers, or materials staff. Performance examination requires satisfactory performance of all checklist steps, in sequential order.

c. Interim Qualified Tester: Qualification as an Interim Qualified Tester requires satisfactory completion of hands-on performance of the testing procedures in the presence of a qualified tester that is qualified in

the same test or module containing the test. Performance examination requires satisfactory performance of all checklist steps, in sequential order.

2. Equivalent programs, i.e., American Concrete Institute (ACI) Certification, may be accepted for qualification where feasible. The State Materials Engineer will determine acceptance of alternate programs.

3. Qualification examinations will be administered by Region IAI supported by Regional Construction Trainers and Regional laboratory supervisors.

4. Performance qualification will be determined from correct performance of all steps, in sequence, based on testing checklists derived from WSDOT adopted test methods as listed in the Materials Manual

5. Failure of a qualification examination will allow for reexamination after a 3-day minimum period of preparation for retest.

6. Repeated failures will be referred to the candidate's supervisor for regional performance review.

7. Tester will continue to be qualified under the following conditions:

a. All unsatisfactory evaluations are resolved within 30 days.

b. The IAI evaluates the Tester any time during the next calendar year (January to December).

c. Testers that missed an annual demonstration of proficiency, may be allowed to do acceptance testing for a 30-day period, if requested by the Project Engineer and approved by the IAI. An evaluation and checklist review by the AIA, the Region Construction Trainer, or materials staff under the direction of the Materials Engineer must be conducted within this 30-day period.

d. Any tester missing two consecutive yearly annual evaluations, will be required to retake the written test and achieved a satisfactory IAI performance evaluations.

9-5.5A(6) Regional Materials Laboratory Responsibilities

The Regional Materials laboratories will:

1. Examine and qualify testers using the Independent Assurance Inspectors, the Region Construction Trainers, or regional materials staff as a primary resource.

2. Annually, verify regional laboratory and field laboratory test equipment, using FOSSC Materials Laboratory equipment verification criteria. A tag will identify the verified equipment.

3. Maintain staff qualification for all methods performed in the Regional Materials Laboratory. Qualification shall be either by Module Qualified or Individual Method Qualified

4. Insure that the IAI will be the responsible person within the region for the accuracy of the information contained in the Tester Qualification Tracking System.

5. Respond to the findings of the review program by FOSSC Materials Laboratory Staff.

6. Perform testing of independent assurance samples and comparison samples using qualified staff and verified equipment, if the region has a qualified laboratory.

7. Support the Construction Tester Training Program for their region or in cooperation with other regions by providing training facilities.

8. Support of construction program testing including: density cores, nuclear gauge correlation and management, concrete 28-day cylinders (acceptance), density standards (Proctor and maximum density), and as needed, asphalt concrete ignition furnace calibration.

9-5.5A(7) Project Engineer Responsibilities

The Project Engineer will:

1. Ensure that all personnel assigned the responsibility for testing materials are Module Qualified Testers, Individual Method Qualified Tester, or Interim Qualified Testers who work under close supervision of a Qualified Tester.

2. Provide an opportunity for on-the-job training, and/or mentoring of Interim Qualified Testers prior to assigning testing responsibilities.

3. Take corrective actions for unsatisfactory evaluations of Qualified Testers.

4. Advise the Regional Independent Assurance Inspector of changes in assigned testers, new testers needing qualification testing, and of follow up corrective actions.

9-5.5A(8) FOSSC Laboratory Responsibilities

The FOSSC Materials Laboratory will:

1. Attain and maintain AASHTO Accreditation of the Materials Quality System responding to the AASHTO Accreditation Program. The Materials Quality System shall include all test methods performed at the FOSSC Materials Laboratory.

2. Assist the Regional Materials Laboratories by providing standards and procedures derived from the Materials Quality System Manual for direct application to corresponding procedures in the Regional Laboratories.

3. Maintain testing standards and procedures in conformance with WSDOT, AASHTO, ASTM, and WAQTC.

4. As the departmental laboratory qualification authority, periodically review the performance and records of region and other subordinate laboratories for consistent practices in testing, equipment verification, and staff qualification.

5. Maintain examinations and checklists used to qualify all WSDOT testing personnel.

6. Provide oversight and coordination for establishment and revision of the qualification programs. Creation and revision of qualification program modules will be by a cross-functional work group.

7. Maintain Tester Qualification Tracking System computer program.

8. Provide guidance and prepare summary for annual report of Independent Assurance (IA) System performance.

9-5.5A(9) Tester Performance Review

1. The IAI, the Region Construction Trainer, or materials staff under the direction of the Materials Engineer reviews performance of all Module qualified, Individual Method Qualified, and interim qualified testers as provided under the IA process.

2. Such reviews are documented in the form of checklists reflecting the degree of conformance to the test procedure. Copies of the review are provided to the tester and to the tester's supervisor (normally the Project Engineer) at the conclusion of the review.

3. Remarks may be included to reflect commendable performance, attention to detail, cooperative attitude, or other performance beyond the expected norm. Satisfactory reports affirm tester proficiency, attest to proper operation of the materials acceptance process.

4. Expected satisfactory performance is that all steps of the checklist be performed correctly. However, incidences of single to several errors as isolated, first-time occurrences, which are acknowledged and corrected by on the spot, discussion with the IAI, also constitute satisfactory performance. (***Note:*** Some procedures may have single steps of such criticality that their omission reflects unsatisfactory performance.)

5. Unsatisfactory performance constitutes repeated occurrences of previous on-the-spot corrections, incorrect performance of critical steps, or incorrect performance of over one-third of the checklist task steps. IAIs may also assign unsatisfactory performance based on observed falsification of test reports, violations of safety, hazardous materials or nuclear materials security standards, or failure to provide proper care of equipment. The Regional Materials Engineer shall promptly review all unsatisfactory performance reports.

6. Reports alleging improper performance of test procedures, may be originated by other parties to a construction contract such as contractors, subcontractors or suppliers. Such allegations must he submitted in writing, to the Project Engineer for review. Allegations must identify the specific test procedure and alleged omissions or commissions and contain the name and signature of the individual making the allegation. These reports will be investigated.

9-5.5A(10) Review Actions for Unsatisfactory Performance

1. The tester's supervisor is expected to review and act on all unsatisfactory performance reports.

2. For unsatisfactory performance, the Regional Materials Engineer will work with the Project Engineer for proposed corrective action. Mutual agreement on corrective action shall be documented by attachment to the performance report.

3. Unresolved reports shall be referred to the Regional Construction Manager.

4. Review of substandard performance shall afford the tester involved the opportunity for a personal appearance. In the case of written allegations of misconduct, the individual making the allegation shall also have the opportunity to appear. The Regional Construction Manager shall review recommendation for corrective action. All findings related to allegations of misconduct shall be made in writing by the Regional Construction Manager.

9-5.5B Independent Assurance (IA) Program

9-5.5B(1) General

The IA Program, through a combination of sampling and observation, is intended to determine the conformance of sampling and testing to the defined procedures. The Independent Assurance process is intended to verify procedures, confirm equipment verification, and, in some instances, obtain split samples (Independent Assurance Samples) for independent testing. These samples do not reflect on the specification conformance of the materials involved. IA evaluation will be on a system basis, focused on individuals testing activity rather than being project-based on a sample frequency and materials quantity basis.

9-5.5B(2) Independent Assurance Inspector (IAI)

The Regional Construction Manager should assign a sufficient number of persons in each region to handle the program for independent assurance sampling, testing, and annual tester evaluation reviews. These IAIs should be under the direction of the Regional Materials Engineer and should be well trained and experienced in all phases of the work.

It will be the duty of the IAI to conduct the IA Program in accordance with the requirements of WSDOT. The IA program requires the evaluation of all materials testers, observation of the techniques used to run the field tests, determination of the verification status and condition of testing equipment in use, and procurement of appropriate Independent Assurance Samples. The IAI's should exercise tact and good judgment in securing maximum cooperation on the part of the testers and other project personnel. IAI's will conduct the examination process under the Construction Tester Qualification Program.

The Tester Qualification Tracking System will identify each tester, their specialty, level of qualification, and the results of ongoing evaluations. The IAI shall be the responsible person within the region for the accuracy of the information contained in the Tester Qualification Tracking System.

The IAI may normally have other materials related functions to perform in addition to the IA functions. Typically, these may include:

1. Conducting initial training to establish interim qualification.

2. Mentoring interim or newly qualified testers to enhance efficiency and confidence.

3. Assisting in or conducting testing and inspection training in concert with the Regional Construction Trainer.

4. Reviewing materials, test-related records, and forms.

5. Radiation Safety Officer

6. Inspection and Certification of Asphalt and Concrete production facilities.

9-5.5B(3) Independent Assurance Evaluations

It is essential that the IAI evaluate all project and region materials testers, observe the techniques of running the field tests, ascertain the verification status of testing equipment in use, and obtain the appropriate Independent Assurance Samples.

The frequency of Independent Assurance Inspections is managed by the IAI's. On-site evaluation by the IAI will be conducted at least once per calendar year, per module or test. The on-site evaluation will accrue the calendar year following qualification or requalification. The on-site evaluation shall include evaluation in all test methods in the applicable qualification module, or the individual method qualified tests. Tests included in a module but not evaluated on a project may be evaluated off-site, such as at the region laboratory. Additional visits are recommended based on the activity level of the individual tester. Further, additional evaluations may be required for follow-up of deficient performance or for monitoring activities of Interim Qualified Testers.

Observations of performance and split sampling will be performed for hot mix asphalt and aggregate testing. Only observations of performance are required for testing of Portland cement concrete and for density testing.

Independent Assurance observations and evaluations will follow the Tester Qualification Checklists for the procedures involved. A copy of these checklists and observations will be provided to the Project Engineer. Each observation will be cataloged to the tester that is observed, to maintain an ongoing account of his/her performance. A complete record should be made of the evaluation and sampling performed during this inspection, the personnel contacted, the testing equipment observed, and the suggestions or on-the-spot corrections that were left with job personnel.

Observations other than test performance related to checklists are not normally considered in the evaluation of the individual tester, but may require action by management involved.

At the time of the Independent Assurance Inspection, where samples are required, the IAI will observe the initial sampling and participate in the sample splitting activity to ensure that an accurate split is obtained. The field split will then be tested, under observation. The split portion will be returned to the Regional Materials Laboratory and tested for comparison of results.

Additional separate comparison samples may be split by the field tester and forwarded to the Regional Materials Laboratory as initiated by the field tester or when directed by the IAI as follow up for observed deficient performance. This sample will be carefully split, identified as "Comparison Sample," show the tester's identity, and be forwarded to the Regional Materials Laboratory accompanied by the field test results.

All testing equipment involved will be examined for the presence of the required Region verification tags current for the present calendar year. In addition, evaluation of the condition of the equipment items is advised for determination of in-service wear or damage.

9-5.5B(4) Evaluation of Independent Assurance Samples Testing

The companion tests of Independent Assurance Samples will be performed employing another qualified operator and set of verified testing equipment than that used for the field (acceptance) test results. When acceptance testing is performed at the Regional Materials Laboratory, the operators should be under the same degree of Independent Assurance oversight as for acceptance sampling performed in the field.

9-5.5B(5) Comparison of Independent Assurance and Acceptance Test Results

Independent Assurance results or comparison results will be compared with the acceptance results. Reports of the comparison of results will be provided to the Project Engineer and the Region IAI. Comments reflecting the degree of conformance will be entered in the remarks section of the report by the Regional Materials Engineer. The degree of conformance will be determined according to the deviation ranges noted below. Gradation test results will be compared only on specification screens.

Test	Normal Range of Deviation	Maximum Range of Deviation
Sand Equivalent	± 8points	± 15points
Fracture	± 5percent	± 10percent
Asphalt Content (ACP&ATB)	± 0.3 percent	± 0.6 percent
Sieve Analysis — All Items:		
No. 4 (4.75 mm) sieve and larger	± 5 percent	± 8 percent
No. 6 (3.35 mm) sieve to No. 80 (0.180 mm) sieve	± 3 percent	± 6 percent
No. 100 (0.150 mm) sieve to No. 200 (0.075 mm) sieve	± 2percent	± 4 percent

In the table above, "Normal Range" indicates an acceptable range of variation between test results and no action is required. Test results that fall in this category will be so indicated by the wording *"normal deviation"* on the independent assurance test reports.

Test results falling outside of the "Normal Range" but within the "Maximum Range," will be indicated by the wording *"questionable deviation"* on the independent assurance test reports. For deviations falling into this category, the Project Engineer or a representative shall review the original test report form, advise the responsible test operator of the deviation, and review the test procedure at the next opportunity. The IAI will take the same actions relative to the test operator in the region laboratory.

Test results exceeding the maximum range will be indicated by the wording *"excessive deviation."* For deviations falling in the excessive category, the Project Engineer or a representative will notify the IAI and/or Region Construction Trainer for their services in corrective action. Corrective action involving both the field tester and the region laboratory tester will include review of sampling procedures, sample splitting procedures, testing procedures, and testing equipment.

The Project Engineer will document actions and results of these investigations by a notation or attachment to the independent assurance sample test report. The Independent Assurance Inspector shall document the actions and results of these investigations on the individual's checklist evaluation with notations as to his/her findings in reviewing region lab procedures. Lacking any other actions, these results shall be considered in scheduling repeat evaluations of a tester and entered into the individual's qualification record. These may include comments or findings by the Region Construction Trainer.

The focus of Independent Assurance sampling is based on individual tester's activity and is not intended to provide independent assurance sample reports on all projects or on all materials on any particular project.

9-5.6 Tolerance Limits

Crushed Coverstone

English	Metric	Specification Limits	Tolerance Limits
% Passing 3/4″	% Passing 19.0 mm	100	95-100
% Passing 5/8″	% Passing 16.0 mm	95-100	90-100
% Passing No. 4	% Passing 4.75 mm	20-45	16-49
% Passing No. 200	% Passing 0.075 mm	0-7.5	0-9.0
Sand Equivalent	Sand Equivalent	32 Min.	27 Min.
Fracture	Fracture	75% Min.	70% Min.

Crushed Screenings 3/4″ — 1/2″ (19.0 mm — 12.5 mm) for B.S.T.

English	Metric	Specification Limits	Tolerance Limits
% Passing 1″	% Passing 25.0 mm	100	95-100
% Passing 3/4″	% Passing 19.0 mm	95-100	90-100
% Passing 1/2″	% Passing 12.5 mm	0-20	0-25
% Passing 3/8″	% Passing 9.50 mm	0-5	0-10
% Passing No. 200	% Passing 0.075 mm	0-1.0	0-2.0
Fracture	Fracture	75% Min.	70% Min.

Crushed Screenings 5/8″ — No. 4 (16.0 mm — 4.75 mm) or B.S.T.

English	Metric	Specification Limits	Tolerance Limits
% Passing 3/4″	% Passing 19.0 mm	100	95-100
% Passing 5/8″	% Passing 16.0 mm	95-100	90-100
% Passing 1/4″	% Passing 6.30 mm	0-10	0-15
% Passing No. 10	% Passing 2.00 mm	0-3	0-7
% Passing No. 200	% Passing 0.075 mm	0-1.0	0-2.0
Fracture	Fracture	75% Min.	70% min.

Crushed Screenings 1/2″ — No. 4 (12.5 mm — 4.75 mm) or B.S.T.

English	Metric	Specification Limits	Tolerance Limits
% Passing 5/8″	% Passing 16.0 mm	100	95-100
% Passing 1/2″	% Passing 12.5 mm	95-100	90-100
% Passing No. 4	% Passing 4.75 mm	0-15	0-20
% Passing No. 10	% Passing 2.00 mm	0-3	0-7
% Passing No. 200	% Passing 0.075 mm	0-1.0	0-2.0
Fracture	Fracture	75% Min.	70% Min

Crushed Screening 3/8″ — No. 10 (9. 50 mm — 2.00 mm)

English	Metric	Specification Limits	Tolerance Limits
% Passing 1/2″	% Passing 12.5 mm	100	95-100
% Passing 3/8″	% Passing 9.50 mm	90-100	85-100
% Passing No. 4	% Passing 4.75	30-56	25-61
% Passing No. 10	% Passing 2.00 mm	0-10	0-12
% Passing No. 200	% Passing 0.075 mm	0-1.0	0-2.0
Fracture	Fracture	75% Min.	70% Min.

Crushed Screenings No. 4 — 0” (4.75 mm — 0 mm) for B.S.T.

English	Metric	Specification Limits	Tolerance Limits
% Passing 3/8″	% Passing 9.50 mm	100	95-100
% Passing No. 4	% Passing 4.75 mm	76-100	71-100
% Passing No. 10	% Passing 2.00 mm	30-60	26-64
% Passing No. 200	% Passing 0.075 mm	0-10.0	0-11.0
Fracture	Fracture	75% Min.	70% Min.

Ballast

English	Metric	Specification Limits	Tolerance Limits
% Passing 2 1/2″	% Passing 63 mm	100	100
% Passing 2″	% Passing 50.0 mm	65-100	60-100
% Passing 1″	% Passing 25.0 mm	50-85	45-90
% Passing No. 4	% Passing 4.75 mm	26-44	21-49
% Passing No. 40	% Passing 0.425 mm	16 Max.	20 Max.
% Passing No. 200	% Passing 0.075 mm	9.0 Max.	10.0 Max.
Sand Equivalent	Sand Equivalent	27 Min.	22 Min.
Dust Ratio	Dust Ratio	2/3 Max.	

Shoulder Ballast

English	Metric	Specification Limits	Tolerance Limits
% Passing 2 1/2″	% Passing 63 mm	100	100
% Passing 3/4″	% Passing 19.0 mm	40-80	35-85
% Passing No. 4	% Passing 4.75 mm	0-5	0-6
% Passing No. 100	% Passing 0.150 mm	0-2.0	0-2.9
Fracture	Fracture	75% Min.	70% Min.

Crushed Surfacing Base Course

English	Metric	Specification Limits	Tolerance Limits
% Passing 1 1/4″	% Passing 31.5 mm	100	95-100
% Passing 5/8″	% Passing 16.0 mm	50-80	45-85
% Passing No. 4	% Passing 4.75 mm	25-45	20-50
% Passing No. 40	% Passing 0.425 mm	3-18	3-20
% Passing No. 200	% Passing 0.075 mm	7.5 Max.	9.0 Max.
Sand Equivalent	Sand Equivalent	32 Min.	27 Min.
Fracture	Fracture	75% Min.	70% Min.

Crushed Surfacing Top Course

English	Metric	Specification Limits	Tolerance Limits
% Passing 3/4″	% Passing 19.0 mm	100	95-100
% Passing No. 4	% Passing 4.75 mm	46-66	41-71
% Passing No. 40	% Passing 0.425 mm	8-24	5-27
% Passing No. 200	% Passing 0.075 mm	10.0 Max.	11.0 Max.
Sand Equivalent	Sand Equivalent	32 Min.	27 Min.
Fracture	Fracture	75% Min.	70% Min.

Maintenance Rock

English	Metric	Specification Limits	Tolerance Limits
% Passing 1/2″	% Passing 12.5 mm	100	95-100
% Passing No. 4	% Passing 4.75 mm	45-66	40-71
% Passing No. 40	% Passing 0.425 mm	10-25	8-30
% Passing No. 200	% Passing 0.075 mm	7.0 Max.	8.0 Max.
Sand Equivalent	Sand Equivalent	32 Min.	27 Min.
Fracture	Fracture	75% Min.	70% Min.

Gravel Base

English	Metric	Specification Limits	Tolerance Limits
% Passing No. 4	% Passing 4.75 mm	22-100	17-100
% Passing No. 200	% Passing 0.075 mm	10.0 Max.	11.0 Max.
Sand Equivalent	Sand Equivalent	27 Min.	22 Min.
Dust Ratio	Dust Ratio	2/3 Max.	

Gravel Backfill for Walls

English	Metric	Specification Limits	Tolerance Limits
% Passing 4″	% Passing 100 mm	100	100
% Passing No. 4	% Passing 4.75 mm	22-66	17-71
% Passing No. 200	% Passing 0.075 mm	5.0 Max.	6.0 Max.
Sand Equivalent	Sand Equivalent	52 Min.	47 Min.
Dust Ratio	Dust Ratio	2/3 Max.	

Gravel Backfill for Pipe Zone Bedding

English	Metric	Specification Limits	Tolerance Limits
% Passing 1″	% Passing 25.0 mm	100	100
% Passing No. 4	% Passing 4.75 mm	20-75	15-80
% Passing No. 200	% Passing 0.075 mm	15.0 Max.	16.0 Max.
Sand Equivalent	Sand Equivalent	27 Min.	22 Min.

Gravel Backfill for Drains

English	Metric	Specification Limits	Tolerance Limits
% Passing 1″	% Passing 25.0 mm	100	95-100
% Passing 3/4″	% Passing 19.0 mm	80-100	75-100
% Passing 3/8″	% Passing 9.50 mm	10-40	8-45
% Passing No. 4	% Passing 4.75 mm	0-4	0-5
% Passing No. 200	% Passing 0.075 mm	0-2	0-2.5

Gravel Backfill for Drywells

English	Metric Limits	Specification Limits	Tolerance
% Passing 1 1/2″	% Passing 37.5 mm	100	95-100
% Passing 1 1/4″	% Passing 31.5 mm	90-100	85-100
% Passing 3/4″	% Passing 19.0 mm	0-20	0-25
% Passing 3/8″	% Passing 9.50 mm	0-2	0-3
% Passing No. 200	% Passing 0.075 mm	0-0.5	0-1.0

Backfill for Sand Drains

English	Metric	Specification Limits	Tolerance Limits
% Passing 1/2″	% Passing 12.5 mm	90-100	85-100
% Passing No. 4	% Passing 4.75 mm	57-100	52-100
% Passing No. 10	% Passing 2.00 mm	40-100	35-100
% Passing No. 50	% Passing 0.30 mm	3-30	2-35
% Passing No. 100	% Passing 0.150 mm	0-4	0-5
% Passing No. 200	% Passing 0.075 mm	0-3.0	0-3.9

Sand Drainage Blanket

English	Metric	Specification Limits	Tolerance Limits
% Passing 2 1/2″	% Passing 63 mm	90-100	85-100
% Passing No. 4	% Passing 4.75 mm	24-100	18-100
% Passing No. 10	% Passing 2.00 mm	14-100	9-100
% Passing No. 50	% Passing 0.30 mm	0-30	0-35
% Passing No. 100	% Passing 0.150 mm	0-7	0-8
% Passing No. 200	% Passing 0.075 mm	0-3.0	0-3.9

Gravel Borrow

English	Metric	Specification Limits	Tolerance Limits
% Passing 4″	% Passing 100 mm	100	95-100
% Passing No. 4	% Passing 4.75 mm	50-80	45-85
% Passing No. 40	% Passing 0.425 mm	30 Max.	33 Max.
% Passing No. 200	% Passing 0.075 mm	7.0 Max.	9.0 Max.
Sand Equivalent	Sand Equivalent	42 Min.	37 Min.

Select Borrow

English	Metric	Specification Limits	Tolerance Limits
% Passing 6″	% Passing 150 mm	100	95-100
% Passing No. 40	% Passing 0.425 mm	50 Max.	55 Max.
% Passing No. 200	% Passing 0.075 mm	10.0 Max.	12.0 Max.
Sand Equivalent	Sand Equivalent	22 Min.	19 Min.

Bedding Material for Thermoplastic Pipe

English	Metric	Specification Limits	Tolerance Limits
% Passing 3/4″	% Passing 19.0 mm	100	95-100
% Passing 3/8″	% Passing 9.50 mm	70-100	65-100
% Passing No. 4	% Passing 4.75 mm	55-100	50-100
% Passing No. 10	% Passing 2.00 mm	35-95	30-100
% Passing No. 20	% Passing 0.85 mm	20-80	15-85
% Passing No. 40	% Passing 0.425 mm	10-55	8-60
% Passing No. 100	% Passing 0.150 mm	0-10	0-11
% Passing No. 200	% Passing 0.075 mm	0-3	0-4

Foundation Material Class A

English	Metric Limits	Specification Limits	Tolerance
% Passing 2 1/2″	% Passing 63 mm	98-100	93-100
% Passing 2″	% Passing 50.0 mm	92-100	87-100
% Passing 1 1/2″	% Passing 37.5 mm	72-87	67-92
% Passing 1 1/4″	% Passing 31.5 mm	58-75	53-80
% Passing 3/4″	% Passing 19.0 mm	27-47	22-52
% Passing 3/8″	% Passing 9.50 mm	3-14	2-16
% Passing No. 4	% Passing 4.75 mm	0-1	0-2

Foundation Material Class B

English	Metric	Specification Limits	Tolerance Limits
% Passing 2 1/2″	% Passing 63 mm	95-100	90-100
% Passing 2″	% Passing 50.0 mm	75-100	70-100
% Passing 1 1/2″	% Passing 37.5 mm	30-60	25-65
% Passing 1 1/4″	% Passing 31.5 mm	0-15	0-17
% Passing 3/4″	% Passing 19.0 mm	0-1	0-2

Aggregate in Asphalt Concrete Mix

Classes A & B

English	Metric	Specification Limits	Tolerance Limits
% Passing 3/4″	% Passing 19.0 mm	100	100
% Passing 1/2″	% Passing 12.5 mm	90-100	85-100
% Passing 3/8″	% Passing 9.50 mm	75-90	70-95
% Passing No. 4	% Passing 4.75 mm	46-66	41-71
% Passing No. 10	% Passing 2.00 mm	30-42	26-46
% Passing No. 40	% Passing 0.425 mm	11-24	9-27
% Passing No. 200	% Passing 0.075 mm	3.0-7.0	2.0-9.0
Sand Equivalent	Sand Equivalent	37 Min.	32 Min.
Fracture	Fracture		
Class A	Class A	90% Min.	85% Min.
Class B	Class B	75% Min.	70% Min.

Class D

English	Metric	Specification Limits	Tolerance Limits
% Passing 5/8″	% Passing 16.0 mm	100	
% Passing 1/2″	% Passing 12.5 mm	100	97-100
% Passing 3/8″	% Passing 9.50 mm	97-100	94-100
% Passing No. 4	% Passing 4.75 mm	0-50	26-54
% Passing No. 8	% Passing 2.36 mm	5-15	3-17
% Passing No. 200	% Passing 0.075 mm	2.0-5.0	0-7.0
Fracture	Fracture	75% Min.	70% Min.
1 Fractured Face	1 Fractured Face	90% Min.	85% Min.
2 Fractured Faces	2 Fractured Faces	75% Min.	70% Min.

Class E

English	Metric	Specification Limits	Tolerance Limits
% Passing 1 1/2″	% Passing 37.5 mm	100	
% Passing 1 1/4″	% Passing 31.54 mm	100	95-100
% Passing 1″	% Passing 25.0 mm	90-100	85-100
% Passing 5/8″	% Passing 16.0 mm	67-86	63-90
% Passing 1/2″	% Passing 12.5 mm	60-80	56-84
% Passing No. 4	% Passing 4.75 mm	34-56	30-60
% Passing No. 10	% Passing 2.00 mm	25-40	21-44
% Passing No. 40	% Passing 0.425 mm	10-23	7-26
% Passing No. 200	% Passing 0.075 mm	2.0-9.0	2.0-10.0
Sand Equivalent	Sand Equivalent	37 Min.	32 Min.
Fracture	Fracture	50% Min.	45% Min.

Class F

English	Metric	Specification Limits	Tolerance Limits
% Passing 1″	% Passing 25.0 mm	100	
% Passing 3/4″	% Passing 19.0 mm	100	95-100
% Passing 1/2″	% Passing 12.5 mm	80-100	75-100
% Passing No. 4	% Passing 4.75 mm	38-70	33-75
% Passing No. 10	% Passing 2.00 mm	30-50	26-54
% Passing No. 200	% Passing 0.075 mm	2.0-8.0	2.0-10.0
Sand Equivalent	Sand Equivalent	27 Min.	22 Min.
Fracture	Fracture	50% Min.	45% Min.

Class G

English	Metric	Specification Limits	Tolerance Limits
% Passing 5/8″	% Passing 16.0 mm	100	
% Passing 1/2″	% Passing 12.5 mm	100	97-100
% Passing 3/8″	% Passing 9.50 mm	97-100	94-100
% Passing No. 4	% Passing 4.75 mm	50-78	45-82
% Passing No. 10	% Passing 2.00 mm	32-53	28-57
% Passing No. 40	% Passing 0.425 mm	11-24	9-27
% Passing No. 200	% Passing 0.075 mm	3.0-7.0	2.0-9.0
Sand Equivalent	Sand Equivalent	37 Min.	32 Min.
Fracture	Fracture	75% Min.	70% Min.

Asphalt Treated Base

English	Metric	Specification Limits	Tolerance Limits
% Passing 2″	% Passing 50.0 mm	100	100
% Passing 1/2″	% Passing 12.5 mm	56-100	54-100
% Passing No. 4	% Passing 4.75 mm	35-72	30-77
% Passing No. 10	% Passing 2.00 mm	22-57	18-61
% Passing No. 40	% Passing 0.425 mm	8-32	5-35
% Passing No. 200	% Passing 0.075 mm	2.0-9.0	2.0-11.0
Sand Equivalent	Sand Equivalent	27 Min.	22 Min.

Asphalt Materials — Paving Asphalt

English/Metric	Specification Limits	Tolerance Limits
Performance Grade (PG)	AASHTO MP1	± 10% of spec.

9-5.7 Acceptance Sampling and Testing Frequency Guide

Item	Test	English Acceptance Sample	Metric Acceptance Sample
Gravel Borrow	Grading & SE	1 – 4000 Ton	4000 Tonnes
Select Borrow	Grading & SE	1 – 4000 Ton	4000 Tonnes
Sand Drainage Blanket	Grading	1 – 4000 Ton	4000 Tonnes
Gravel Base	Grading, SE & Dust Ratio	1 – 4000 Ton	4000 Tonnes
CSTC	Grading, SE & Fracture	1 – 2000 Ton	2000 Tonnes
CSBC	Grading, SE & Fracture	1 – 2000 Ton	2000 Tonnes
Maintenance Rock	Grading, SE & Fracture	1 – 2000 Ton	2000 Tonnes
Ballast	Grading, SE & Dust Ratio	1 – 2000 Ton	2000 Tonnes
Shoulder Ballast	Grading & Fracture	1 – 2000 Ton	2000 Tonnes
Backfill for Sand Drains	Grading	1 – 2000 Ton	2000 Tonnes
Crushed Covers e	Grading, SE & Fracture	1 – 1000 Ton	1000 Tonnes
Crushed Screening			
5/8 – No. 4 (16.0 – 4.75 mm)	Grading & Fracture	1 – 1000 Ton	1000 Tonnes
1/2 – No. 4 (12.0 – 4.75 mm)	Grading & Fracture	1 – 1000 Ton	1000 Tonnes
No. 4 – 0 (4.75 – 0 mm)	Grading & Fracture	1 – 1000 Ton	1000 Tonnes
Gravel Backfill For			
Foundations	Grading & SE	1 – 1000 Ton	1000 Tonnes
Walls	Grading, SE & Dust Ratio	1 – 1000 Ton	1000 Tonnes
Pipe Zone Bedding	Grading & SE	1 – 1000 Ton	1000 Tonnes
Drains	Grading	1 – 100 Ton	100 Tonnes
PCC Paving			
Coarse Aggregate	Grading	1 – 2000 Ton	2000 Tonnes
Fine Aggregate	Grading	1 – 1000 Ton	1000 Tonnes
Air Content	Air	1 – 500 CY	400 m3
Cylinders (28-day)	Compressive Strength	1 – 500 CY	400 m3
Core	Density	1 – 500 CY	400 m3
	Thickness	1 – 500 CY	400 m3
Cement	Chemical & Physical Certification		
See Note 5			
PCC Structures			
Coarse Aggregate	Grading	1 – 1000 Ton	1000 Tonnes
Fine Aggregate	Grading	1 – 500 Ton	500 Tonnes
Consistency	Slump	1 – 40 m^3	50 CY
Air Content	Air	1 – 40 m^3	50 CY
Cylinders (28-day)	Compressive Strength	1 – 50 CY	40 m^3
Cement	Chemical & Physical Certification		
See Note 5			
Asphalt Concrete Pavement			
Completed Mix, See Note 3 and 4			
	Grading & Asphalt Content	1 – 800 Ton	800 Tonnes
	Compaction	5 – 400 Ton	400 Tonnes
Open Graded, See Note 3 Class D and D Mod.	Grading (Agg. from cold feed)	1 – 800 Ton	800 Tonnes

Item	Test	English Acceptance Sample	Metric Acceptance Sample
Asphalt Concrete Aggregate			
Aggregate (from cold feed)	SE & Fracture, See Note 3	1 – 1600 Ton	1600 Tonnes
Coarse Aggregate (in stockpile) See Note 1	Grading, SE, & Fracture	1 – 1000 Ton	1000 Tonnes
Fine Aggregate (in stockpile) See Note 1	Grading, SE, & Fracture	1 – 1000 Ton	1000 Tonnes
Blend Sand (in stockpile)	SE	1 – 1000 Ton	1000 Tonnes
Mineral Filler	Sp. G & Pl	Certificate	Certificate
Asphalt Treated Base			
Aggregate	Grading See Note 1 & SE	1 – 1000 Ton	1000 Tonnes
Completed Mix See Note 4	Grading & Asphalt	1 – 1000 Ton	1000 Tonnes
	Compaction, See Note 2	5 – Control Lot	5 – Control Lot
Asphalt Materials		Certification	Certification
Paving Asphalt (AR, AC, PBA, PG)	Verification:	2-1 quart	2-1 liter
		every other mix acceptance sample, see Note 6	
liquid Asphalt (Cutback, Emulsion)	Verification:	2-1 quart	2-1 liter
		every other shipment	
Emulsion for ACP Tack Coat	Verification:	None required	
Rubberized Asphalt	Verification:	2-1 quart	2-1 liter
		every other mix acceptance sample	
Compaction			
Embankment		1 – 2500 CY	2000 M^3
Cut Section		1 – 500 LF	150 M
Surfacing		1 – 1,000 LF (per layer)	300 M (per layer)
Backfill		1 – 500 CY	400 M^2

Note 1 Tests for grading will be performed only when aggregates are being produced and stockpiled for use on a future project.

Note 2 A control lot shall be a normal days production.

Note 3 For projects under statistical acceptance, the sample frequency shall be as prescribed in the contract and the sublot size may vary from 500 to 800 ton depending on the project quantities. For projects under nonstatistical acceptance, the sublot size may vary from 400 to 800 ton tonnes with a minimum of one sublot per day when the daily production is less than 400 ton

Note 4 Mix design conformation samples shall be submitted to the FOSSC Materials Laboratory Bituminous Concrete Section. For all projects, submit one sample per day from the first five days of production for each plant and one sample every fifth day of production there after. The conformation samples should be taken in conjunction with and be a representative quarter of the acceptance samples taken for the project as described in WSDOT Test Method 712. If no acceptance sample is required for any day of production no conformation sample will be required either.

Note 5 Cement may be accepted by the Engineer based on the Manufacturer's Mill Test Report number indicating full conformance to the Specifications. The Engineer has the option of taking samples at the job site for submission to the FOSSC Materials Laboratory for testing.

Note 6 For nonstatistical of aspahlt concrete pavement, take one sample for every 1,600 tons of mixture.

9-6 Radioactive Testing Devices

9-6.1 Administration and Safety

The purpose of this chapter is to provide a guide for personnel using, and administering the use of, nuclear density gauges. The instructions included in this Chapter will be used throughout the Washington State Department of Transportation for the express purpose of regulating the use of nuclear density gauge containing radioactive materials.

Each Region shall have a Regional Radiation Administration Officer and a Regional Radiation Safety Officer whose duties are described in Chapter 9-6.2 and 9-6.3. Only personnel who have successfully completed the WSDOT 'Nuclear Gauge Operator Qualification' course are authorized to use the nuclear density gauge. To perform acceptance testing with the nuclear density gauge all personnel must become a qualified or interim tester in either the Hot Mix Asphalt or Density modules. The operators responsibilities for safety and security of the gauges are described in Chapter 9-6.4.

All personnel using or responsible for the nuclear density gauge shall be:

1. Thoroughly familiar with the safe handling techniques for using radioactive materials.

2. Fully informed of the hazards to health that exists near radioactive materials.

3. Completely familiar and in compliance with the following rules and regulations:

   a. Rules and Regulations for Radiation Protection by the State Department of Health, Division of Radiation Protection, Title 246, WAC.

   b. Radiation Emergency Handbook by the State Department of Health.

Copies of the above publications will be kept by the Region Radiation Safety Officer and at the storage location of the gauge. A copy of the *Radiation Emergency Handbook* will also be supplied with each nuclear density gauge. Authorized Operator will read this handbook before using the radioactive testing device for testing.

If an emergency as outlined in the *Radiation Emergency Handbook* occurs, the following people or agencies should be notified by the individual in charge of the nuclear density gauge:

1. Radiation Safety Officer.

2. Radiation Administration Officer

The RSO or the RAO will notify, the following people or agencies:

1. Radiation Control Program; Health Services Division; State Department of Health; Olympia, Washington 98504 (Phone 206/NUCLEAR).

2. Washington State Patrol, if a public hazard exists.

3. FOSSC Radiation Administration Officer or Radiation Safety Officer, at the Materials Laboratory.

The telephone numbers of these agencies or individuals will be posted at all storage sites and a copy of these numbers shall be kept with each nuclear density gauge.

It is paramount to the Department that it's employees work in a healthy and safe environment. To this end each employee that works around or with nuclear gauges needs to know the potential hazards, of working with nuclear gauges and their individual rights. Each office that uses or stores nuclear gauges shall have a copy of the latest " Sealed Source Edition Rules & Regulations for Radiation Protection" published by the Department of Health. Every employee that uses or works near the storage location of the nuclear gauges must sign the " Acknowledgment of the Hazards of Working with Radiation Sources " form after being instructed to review the applicable Chapters 246-220 Radiation - General Provisions; 246-221 Radiation Protection Standards; 246-222 Radiation Protection - Worker Rights. This form is available through the Radiation Safety Officer.

Personal monitoring of radiation received from the nuclear density gauge is one of the major items in the Health Safety Program. Anyone handling radioactive sources must wear a radiation exposure badge, which records any exposure that the body may receive. Radiation exposure badges are assigned to individuals. They are not to be used by any other person. Attention is to be made to the conditions outlined in WAC 246-221-010 and WAC 246-221-055 regarding the radiation exposure during pregnancy and dose limits to the embryo / fetus.

The acquisition of radiation exposure badges as needed by each Region shall be the responsibility of the Regional Radiation Safety Officer. These badges can be obtained from U.S. Dosimeter Technology Inc., 660-A George Washington Way, Richland, Washington 99352, Telephone (509) 946-8738, or from a firm recognized by the Department of Health to perform this service. Three-month TLD (Thermal Luminescent Dosimeter) badges indicating exposure to gamma, beta, x-ray, and neutron radiation will be used as a minimum.

Each nuclear density gauge will be supplied in the manufacture's shipping container with an adequate latch. While transporting and when storing the nuclear density gauge, it must be secured with a minimum of 3 locks. At all times, the key for the lock will be in the possession of the individual responsible for the nuclear density gauge When a passenger vehicle is used for transporting, the shipping container containing the nuclear density gauge shall be kept in the trunk. When a station wagon or panel truck is used, the nuclear density gauge shall be placed at the back of the vehicle in such a manner as to prevent it from sliding around. When carried in a six-passenger pickup with a service body, the nuclear density gauge shall be carried in the back, with the storage lid locked. Don't carry the nuclear density gauge in the back seat. When a pickup is used, the box containing the nuclear density gauge will be secured to the bed of the vehicle to prevent movement and in such a way to prevent theft.

For en route overnight storage at a motel, hotel, or other lodging place, the locked nuclear density gauge may be left in the locked vehicle. In case of a pickup truck, the nuclear density gauge must be locked in the cab of the truck.

9-6.2 Radiation Administration Officer (Region Materials Engineer)

The Radiation Administration Officer (RAO) will be responsible for administering the use of radioactive material within the Region.

The RAO will obtain, revise, and renew the Region's Radioactive Material License issued by the Washington State Department of Health. A license indicates the strength and type of sources that a Region may possess.

Licenses are issued subject to all the requirements of the Washington Rules and Regulations for Radiation Protection and to the conditions specified in the license. Licenses are also subject to any additional requirements of the Department of Health as stated in letters issued by DOH. Where a letter containing a license condition requirement differs from the Regulations, the letter will supersede the regulations insofar as the license is concerned.

When a change occurs in the radiation program which would make untrue a statement in the current Radioactive Material License, the Licensee (RSO) will notify the Department of Health and request an appropriate amendment.

The Radiation Safety Officer must be listed on the license. Individual operators are not required to be on the license, but the Radiation Administration Officer or RSO must maintain a list of authorized operators. This list of authorized operators should include the operator's name, type of training, final test score, and a copy of the training certificate. The RAO or RSO will be responsible for the storage of the nuclear density gauge when not in field use, and the assignment of nuclear density gauge to the individual project offices. The RAO or RSO will be responsible for maintaining the following records:

1. List of qualified operators within the Region.
2. Radioactive testing device location records.
3. Radioactive testing device shipping records.

Prior to shipping (or transferring) the nuclear density gauge from one licensed organization to another, the shipper shall check, and be assured, that the receiver has a valid license; and that the shipped (or transferred) sources do not exceed the limitations of the receiver's license. Shipment to authorized personnel within the Region is covered by the Region's license. The FOSSC Materials Laboratory shall be notified of any repairs or calibration that is needed to the nuclear density gauge. When the nuclear density gauge are not in field use, the normal storage will be at the Region office. This should be an area designated for this purpose with the following information posted on the walls of the room to notify personnel of the existence of radiation:

1. "CAUTION — RADIOACTIVE MATERIALS" sign.
2. DOH Form RHF-3 "Notice to Employees."
3. WAC Chapters 246-220, 246-221, and 246-222 of the Rules and Regulations for Radiation Protection.
4. DOH Form "Notification of a Radiation Emergency."

9-6.3 Radiation Safety Officer

The Radiation Safety Officer (RSO) will have the responsibility for the Regional radiation protection program. The RSO will be responsible for maintaining the following records:

1. Wipe test records.
2. Medical records.
3. Radiation Exposure Report.
4. Minor testing device maintenance as outlined in the Radioactive Materials License.
5. The Acknowledgment of the Hazards of Working with Radiation Sources form.

Wipe tests or leak testing is required by law and is simply a swabbing of the sealed source to ascertain that no radioactive contamination has occurred from the nuclear source. The Regional RSO shall be responsible for having each source wiped every six months. The analysis of wipe tests is done by a commercial firm licensed to do this work.

The service contract will be obtained by individual regions. Records of leak tests results shall be kept in units of microcuries and maintained for inspection. Any leak test revealing the presence of 1850 Bq (0.005 microcuries) or more of removable radioactive material shall be reported to the Department of Health, Division of Radiation Protection, P.O. Box 47827, Olympia, WA 98504-7827, within five days of the test. This report should include a description of the defective source or device, the results of the test, and the corrective action taken.

Leak test kits can be obtained from Troxler Electronic Laboratory, Inc. When returning the sample for testing, place the sample in a plastic envelope. Place the plastic envelope(s) in another envelope and write your regions name, address, and other pertinent details on the outside. This envelope must be marked "RADIOACTIVE MATERIALS — NO LABEL REQUIRED."

Place this envelope into another envelope addressed to the approved facility for processing. Prior to being mailed, the contents and packing must be checked with a survey instrument and the radiation at any point on the surface must not exceed a dose rate greater than 0.005 mSv (0.5 millirem) per hour in order to comply with U.S. Postal Regulations.

The RSO will be responsible for radiation exposure reports for their personnel in that Region. Exposure records shall be kept on Department of Health Form RFH-5 or in a manner, which includes all information, required on said form. Each entry shall be for a period of time not exceeding one calendar quarter.

9-6.4 Authorized Operators

The Authorized Operators will be directly responsible to the RAO for the use and storage of the nuclear density gauge in the field and to the RSO for all safety in regard to the nuclear density gauge.

The Authorized Operators shall be responsible for posting the following information at all field storage areas:

1. "CAUTION — RADIOACTIVE MATERIALS" Sign.
2. DOH Form RHF-3 "Notice to Employees."
3. WAC Chapters 246-220, 246-221, and 246-222 of the Rules and Regulations for Radiation Protection.
4. DOH Form "Notification of a Radiation Emergency."

The Authorized Operator must keep the RAO or RSO informed of the location of the nuclear density gauge at all times. (The State Radiation Control Unit inspectors will want the sources produced or the exact locations given during their periodic inspections.) If the exact location where the nuclear density gauge will be used is known in advance, it should be noted before leaving the Region office, and if unknown, shall be forwarded to the RAO or RSO as soon as it is known.

The operation of the shutter-operating device should be continuously checked and any malfunction reported to the RAO or RSO immediately. When not in use, the source index handle will be locked and the nuclear density gauge locked in an adequate storage facility. When operating the nuclear gauge (i.e., when the handle is in the "USE" position), unauthorized personnel are not to be within 15 feet (5 meters) of the gauge.

9-7 Vacant

9-8 WSDOT Testing Methods

9-8.1 Calibrated/Verified Equipment for Testing

The following listed equipment used in the Region Laboratory and in the Field Laboratory for acceptance testing is required to be verified and / or calibrated annually, and shall bear a tag indicating when calibrated or verified will expire. It is the responsibility of the testing personnel (i.e., Module Qualified Testers, Method Qualified Testers, or Interim Qualified Testers and Independent Assurance Inspectors) to check all equipment for serviceability and conformance to the requirements of the test procedure. No equipment that has expired shall be used for testing.

Aggregate Testing

Drying Ovens (AASHTO T-255, 265)

General Purpose Balances, Scales and Weights (AASHTO M-231)

Mechanical Sieve Shaker (AASHTO T-27)

Sand Equivalent Shaker (AASHTO T-176)

Sand Equivalent Weighted Foot Assembly (AASHTO T-176)

Sand Equivalent Irrigation Tube

Sieves (AASHTO M-92)

Thermometers

Timing Devices (AASHTO T-176)

Asphalt Testing

Drying Ovens (AASHTO T-255, 265, and WAQTC TM-6)

General Purpose Balances, Scales and Weights (AASHTO M-231)

Ignition Furnace (AASHTO T-308)

Mechanical Sieve Shaker (AASHTO T-30)

Sieves (AASHTO M-92)

Thermometer - ASTM 17C or 17F (AASHTO T-209)

Thermometer – drying temperature

Timing Devices

Vacuum System (AASHTO T-209)

Water Bath - if used (AASHTO T-209)

Pycnometer (AASHTO T-209)

Concrete Testing

Concrete Air Meters - Pressure gauge (AASHTO T-152)

Concrete Air Meters - Volumetric gauge (AASHTO T-152)

Cube Molds and Tamper (AASHTO T106) (no tag on tamper required)

General Purpose Balances, Scales and Weights (AASHTO M-231)

Rebound Hammer Type N (ASTM C-805)

Single Use Molds (AASHTO M-205) (no tag required)

Slump Cone and Rod (AASHTO T-119) (no tag on rod required)

Thermometer (AASHTO T-309)

Compression Testing Devise and associated equipment (AASHTO T-22, WSDOT T-802)

Beam Molds (WSDOT T-808)

Embankment and Base Density Testing

Drying Ovens (AASHTO T-255, 265)

General Purpose Balances, Scales and Weights (AASHTO M-231)

Manual Hammer (AASHTO T-99)

Mechanical Sieve Shaker (AASHTO T-27)

Maximum Density Devise (WSDOT T-606)

Nuclear Density Gauge (WAQTC TM-7)

Sieves (AASHTO M-92)

Speedy Moisture Meter (AASHTO T-217)

Soil Mold (AASHTO T-99), W606

Straight Edge (AASHTO T-99)

Asphalt Pavement Density Testing

Nuclear Density Gauge (AASHTO T-310)

Thermometer

9-8.2 Field Test Methods for Materials

The test method as specified by WSDOT Materials Manual will be used to perform the testing. All testing will be performed by a Module Qualified Testers, Individual Method Qualified Testers, or Interim Qualified Testers as defined in Chapter 9-5 of this manual. The tester can be qualified in a testing module, or by individual test methods. In Section 9-8.2A is the list of the tests that are included in each of the modules. A tester can be Individual Method Qualified in any test that are included in the modules or from the list of individual tests in Section 9-8.2B, however the tester is not limited to just these tests. All of the test methods listed in each of the testing modules can be found in the blue pages following this section, see Section 9-8.2C for the Contents. In addition the WSDOT and WAQTC test methods that are performed in the field and that are listed in Section 9-8.2B are included.

9-8.2A Testing Modules

Testing Modules Procedures

Aggregate Module

Procedure Number	Test Method
AASHTO T-2	**WSDOT FOP for AASHTO for** the Sampling of Aggregates
AASHTO T-27/T11	**WAQTC FOP for AASHTO for** the Sieve Analysis of Fine & Coarse Aggregates & Materials Finer Than 75 mm (No. 200) in Mineral Aggregates by Washing
AASHTO T-176	**WSDOT FOP for AASHTO for** Determining the Plastic Fines in Graded Aggregate by Use of the Sand Equivalent Test
AASHTO T-248	**WSDOT FOP for AASHTO for** Reducing Field Samples of Aggregates to Testing Size
AASHTO T-255	**WSDOT FOP for AASHTO for** Determining the Total Moisture Content of Aggregate by Drying
WAQTC TM-1	Determining the Percentage of Fracture in Coarse Aggregate

Asphalt Module

AASHTO T-168	**WAQTC FOP for AASHTO for** the Sampling Bituminous Paving Mixtures
AASHTO T-209	**WSDOT FOP for AASHTO for** Determining the Theoretical Maximum Specific Gravity and Density of Bituminous Paving Mixtures
AASHTO T-30	**WSDOT FOP for AASHTO for** the Mechanical Analysis of Extracted Aggregate
AASHTO T-40	**WAQTC FOP for AASHTO for** Sampling Bituminous Materials
AASHTO T-308	**WSDOT FOP for AASHTO for** Determining Asphalt Content of Hot Mix Asphalt(HMA) by the Ignition Method
WAQTC TM-6	Moisture Content of Bituminous Mixes by Oven
WSDOT 712	Standard Method of Reducing Bituminous Paving Mixtures
WSDOT 716	Method of Random Sampling for Location of Testing and Sampling Sites

Concrete Module

AASHTO T-23	**WSDOT FOP for AASHTO for** Making and Curing Concrete test Specimens in the Field
AASHTO T-119	**WSDOT FOP for AASHTO for** Determining the Slump of Hydraulic Cement Concrete
AASHTO T-152	**WAQTC FOP for AASHTO for** Determining the Air Content of Freshly Mixed Concrete by the Pressure Method
WAQTC TM-2	Sampling Freshly Mixed Concrete
AASHTO T-309	**WSDOT FOP for AASHTO for** Determining the Temperature of Freshly Mixed Portland Cement Concrete

Embankment and Base Density Module

AASHTO T-224	**WSDOT FOP for AASHTO for** Correction for Coarse Particles in the Soil Compaction Test
AASHTO T-310	**WSDOT FOP for AASHTO for** In-Place Density and Moisture Content of Soil and Soil-Aggregate by Nuclear Method

Asphalt Pavement Density Module

WAQTC TM-8	In-Place Density of Bituminous Mixtures Using the Nuclear Moisture Gauge
WSDOT 716	Method of Random Sampling for Location of Testing and Sampling Sites

9-8.2B Individual Tests Method

Procedure Number		Owner	Test Method
TP	4	AASHTO	Method for Preparing and Determining the Density of Hot Mix Asphalt (HMA) Specimens by Means of the SHRP Gyratory Compactor
T	11	AASHTO	Materials Finer Than 0.075 mm (No. 200) Sieve in Mineral Aggregates by Washing
T	19	AASHTO	Unit Weight and Voids in Aggregates
T	21	AASHTO	Organic Impurities in Fine Aggregates for Concrete
T	22	AASHTO	Compressive Strength of Cylindrical Concrete Specimens
T	23	AASHTO	Making and Curing Concrete Test Specimens in the Field
T	27	AASHTO	Sieve Analysis of Fine and Coarse Aggregates
T	65	AASHTO	Mass (Weight) of Coating on Iron and Steel Articles with Zinc or Zinc-Alloy Coatings
T	88	AASHTO	Particle Size Analysis of Soils
T	99	AASHTO	**FOP for AASHTO for** Method of Test for Moisture-Density Relations of Soils
T	106	AASHTO	Compressive Strength of Mortars (Using 0-mm or 2-in.) Cube Specimens
T	121	AASHTO	Mass per Cubic Meter (Cubic Foot), Yield, and Air Content (Gravimetric) of Concrete
T	123	WSDOT	Method of Test for Bark Mulch
T	148	AASHTO	Measuring Length of Drilled Concrete Cores
T	166	AASHTO	Bulk Specific Gravity of Compacted Asphalt Mixtures Using Saturated Surface-Dry Specimens
T	196	AASHTO	Air Content of Freshly Mixed Concrete by the Volumetric Method
T	217	AASHTO	**WSDOT FOP for AASHTO for** Determination of Moisture in Soils by Means of a Calcium Carbide Gas Pressure Moisture Tester
T	231	AASHTO	Capping Cylindrical Concrete Specimens
T	244	AASHTO	Mechanical Testing of Steel Products
T	272	AASHTO	**FOP for AASHTO for** Family of Curves — One Point Method
T	417	WSDOT	Method of Test for Determining Minimum Resistively and pH of Soil and Water
T	606	WSDOT	Method of Test for Compaction Control of Granular Materials
T	720	WSDOT	Method of Test for Thickness Measurement of Asphalt Concrete Cores
T	724	WSDOT	Method for Preparation of Aggregate for ACP Job Mix Design
T	726	WSDOT	Method of Test for Mixing Procedure for Binder and Aggregate
T	802	WSDOT	Flexural Strength of Concrete [Using Simple Beam with Center-Point Loading] Breaking)
C	805	ASTM	Test Method for Rebound Number of Hardened Concrete
T	810	WSDOT	Method of Test for Determination of the Density of Portland Cement Concrete Pavement Cores
T	914	WSDOT	Practice for Sampling of Geotextiles for Testing
C	939	ASTM	Standard Test Method for Flow of Grout for Preplaced-Aggregate Concrete (Flow Cone Method)
D	1186	ASTM	**FOP for ASTM for** Nondestructive Measurement of Thickness of Nonmagnetic Coating on a Ferrous Base

9-8.2C Contents for Test Procedures in This Manual

Procedure Number	Owner	Test Method
TM 1	WAQTC	Determining the Percentage of Fracture in Coarse Aggregate
T 2	AASHTO	Sampling of Aggregate
TM 2	WAQTC	Sampling Freshly Mixed Concrete
TM 6	WAQTC	Moisture Content of Bituminous Mixes by Oven
TM 8	WAQTC	Method of Test for Relative Compaction of Asphalt Concrete Pavement
T 22	WSDOT	**FOP for AASHTO for** Compressive Strength of Cylindrical Concrete Specimens
T 23	WSDOT	**FOP for AASHTO for** Making and Curing Concrete test Specimens in the Field
T 27/11	WAQTC	**FOP for AASHTO for** Sieve Analysis of Fine & Coarse Aggregates & Materials Finer Than 75 mm (No. 200) in Mineral Aggregates by Washing
T 30	WSDOT	**FOP for AASHTO for** Mechanical Analysis of Extracted Aggregate
T 40	WAQTC	**FOP for AASHTO for** Sampling Bituminous Materials
T 99	WSDOT	**FOP for AASHTO for** Method of Test for Moisture-Density Relations of Soils
T 106	WSDOT	**FOP for AASHTO for** Compressive Strength of Hydraulic Cement Mortars (Using 2-in. or (50-mm) Cube Specimens)
T 119	WSDOT	**FOP for AASHTO for** Slump of Hydraulic Cement Concrete
T 123	WSDOT	Method of Test for Bark Mulch
T 152	WAQTC	**FOP for AASHTO for** Air Content of Freshly Mixed Concrete by the Pressure Method
T 166	WSDOT	**FOP for AASHTO for** Bulk Specific Gravities of Compacted Asphalt Mixtures Using Saturated Surface Dry Specimens
T 168	WAQTC	**FOP for AASHTO for** Sampling Bituminous Paving Mixtures
T 176	WSDOT	**FOP for AASHTO for** Plastic Fines in Grade Aggregate by Use of the Sand Equivalent Test
T 209	WSDOT	**FOP for AASHTO for** Theoretical Maximum Specific Gravity and Density of Bituminous Paving Mixtures “Rice Density”
T 217	WSDOT	**FOP for AASHTO for** Determination of Moisture in Soils by means of a Calcium Carbide Gas Pressure Moisture Tester
T 224	WSDOT	**FOP for AASHTO for** Correction for Coarse Particles in Soil Compaction Test
T 231	WSDOT	**FOP for AASHTO for** Capping Cylindrical Concrete Specimens
T 248	WSDOT	**FOP for AASHTO for** Reducing Field Samples of Aggregates to Testing Size
T 255	WSDOT	**FOP for AASHTO for** Total Moisture Content of Aggregate by Drying
T 272	WSDOT	**FOP for AASHTO for** Family of Curves — One Point Method
T 308	WSDOT	**FOP for AASHTO for** Determining Asphalt Content of Hot Mix Asphalt(HMA) by the Ignition Method
T 309	WSDOT	**FOP for AASHTO for** Method for Determination of the Temperature of Freshly Mixed Concrete
T 310	WSDOT	**FOP for AASHTO for** In-Place Density and Moisture Content of Soil and Soil-Aggregate by Nuclear Methods (Shallow Depth)
T 413	WSDOT	Method of Test for Evaluating Waterproofing Effectiveness of Membranes and Membrane Pavement Systems
T 420	WSDOT	**FOP for AASHTO for** Determining the Maturity of Compost (Solvita Test)
T 606	WSDOT	Method of Test for Compaction Control of Granular Materials
SOP 615	WSDOT	Standard Operating Procedure for the In-Place Density of Embankment and Base using the Nuclear Moisture-Density Gauge

T	712	WSDOT	Standard Method of Reducing Bituminous Paving Mixtures
T	716	WSDOT	Method of Random Sampling for Location of Testing and Sampling Sites
T	724	WSDOT	Method for Preparation of Aggregate for ACP Job Mix Design
T	726	WSDOT	Method of Test for Mixing Procedure for Binder and Aggregate
SOP	728	WSDOT	Standard Operating Procedure for Determining the Ignition Furnace Calibration Factor (IFCF) for Hot Mix Asphalt (HMA)
SOP	729	WSDOT	Standard Operating Procedure for the In-Place Density of Bituminous Mixes using the Nuclear Moisture-Density Gauge
SOP	730	WSDOT	Standard Operating Procedure for Correlation of Nuclear Gauge Determined Density with Asphalt Concrete Pavement Cores
T	802	WSDOT	Flexural Strength of Concrete [Using Simple Beam with Center-Point Loading]
C	805	WSDOT	**FOP for ASTM for** Test Method for Rebound Number of Hardened Concrete
T	807	WSDOT	Method of Operation of California Profilograph and Evaluation of Profiles
T	808	WSDOT	Method for Making Flexural Test Beams
T	810	WSDOT	Method of Test for Determination of the Density of Portland Cement Concrete Pavement Cores
T	813	WSDOT	Field Method of Fabrication of 50-mm (2-in.) Cube Specimens for Compressive Strength Testing of Grouts and Mortars
T	914	WSDOT	Practice for Sampling of Geotextiles for Testing
T	939	WSDOT	**FOP for ASTM for** Flow of Grout for Preplaced-Aggregate Concrete (Flow Cone Method)
D	1186	WSDOT	**FOP for ASTM for** Nondestructive Measurement of Thickness of Nonmagnetic Coatings on a Ferrous Base

P65:DP/CM

DETERMINING THE PERCENTAGE OF FRACTURE IN COARSE AGGREGATE FOP FOR WAQTC TM 1

01

Significance

02 Aggregate particles can be round or smooth, as is often the case for material mined from the bottom of a river. This material has been rounded or smoothed as the stone has been transported downstream through the years. Aggregate can also be fractured, exhibiting a rough surface. Material

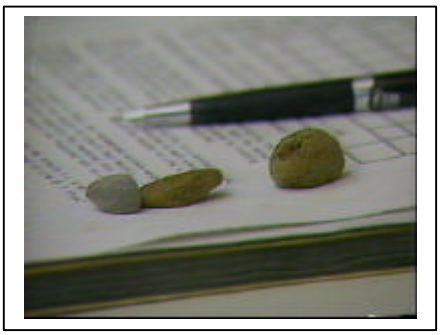

Fractured aggregate

03 that has been mechanically crushed has at least one fractured, rough surface per particle.

Fractured material often exhibits better interlocking between particles than does smooth material. This improved interlocking results in stronger material from the standpoint of supporting a load in a road base. Using stronger material results in a lesser depth of material being used. Fractured material may also be used in portland cement (PCC) or asphalt cement concretes (ACC) to obtain a better bond between aggregate particles and the cement. Again, a stronger structure

04 results.

Scope

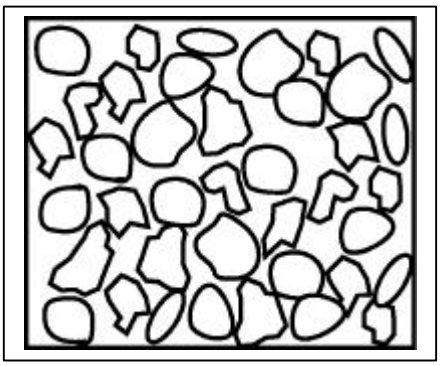

Fractured and unfractured

05 <u>This method determines the percentage of fractured particles in an aggregate sample.</u>

~~This procedure covers the determination of the percentage, by mass, of a coarse aggregate (CA) sample that consists of fractured particles meeting specified requirements in accordance with WAQTC TM 1.~~

~~In this procedure, a sample of aggregate is screened on the sieve separating CA and fine aggregate (FA). This sieve will be identified in the agency's specifications, but might be the 4.75 mm (No. 4) sieve. CA particles are visually evaluated to determine conformance to the specified fracture. The percentage of conforming particles, by mass, is calculated for comparison to the specifications.~~

Method 2 will be used by WSDOT for determining the fracture of aggregate as required by the Standard Specifications.

Apparatus

- Balance – The balance shall have sufficient capacity, be readable to 0.1 percent of the sample mass, or better, and conform to the requirements of M231.
- ~~Balance or scale: Capacity sufficient for the principle sample mass, accurate to~~

  ~~0.1 percent of the sample mass or readable to 0.1 g.~~
- Sieves, meeting requirements of AASHTO M 92.
- Splitter, meeting the requirements of AASHTO T 248.

Terminology

06 1. Fractured Face – An angular, rough, or broken surface of an aggregate particle created by crushing, or other means. A face is considered a "Fractured Face" whenever one-half or more of the projected area, when viewed normal to that face, is fractured with sharp and well defined edges. This excludes small nicks.
2. Fractured particle – A particle of aggregate having at least the minimum number of fractured faces specified. ~~(This is usually one or two.)~~

Sampling and Sample Preparation

07 1. Sample and reduce the aggregate in accordance with FOP for AASHTO T 2 and FOP for AASHTO T 248.

2. When the specifications list only a total fracture percentage, the sample shall be prepared in accordance with Method 1. When the specifications require that the fracture be counted and reported on each sieve, the sample shall be prepared in accordance with Method 2.

08 3. Method 1 – Combined Fracture Determination

WSDOT has deleted this section.

10 4. **Method 2** – Individual Sieve Fracture Determination

Method 2 is to be used for all Asphalt Concrete Aggregate.

a. Dry the sample sufficiently to obtain a clean separation of CA and FA material in the sieving operation. ~~Use a washed sample from the gradation determination.~~

b. Sieve the sample in accordance with FOP for AASHTO T 27/11 over the sieves listed in the specifications for this material.

c. Select a representative portion from each sieve by splitting or quartering in accordance with FOP for AASHTO T 248. The size of test sample for each sieve should be at least as large as shown in Table 2.

If the separation of the material is performed using extra sieves, the material retained on the intermediate sieves shall be added to the material retained on the next smaller specified sieve. This material is to be thoroughly mixed then quartered or split to a mass as shown in Table 2. The fracture will be counted and reported for the specified sieve.

11 **TABLE 2**
Sample Size for Fracture Determination

Sieve Size in. (mm)	Minimum Sample Mass lb (g)
1 1/4 (31.5)	3.5 (1500)
1 (25.0)	2.2 (1000)
3/4 (19.0)	1.5 (700)
5/8 (16.0)	1.0 (500)
1/2 (12.5)	0.7 (300)
3/8 (9.5)	0.5 (200)
1/4 (6.3)	0.2 (100)
No. 4 (4.75)	0.2 (100)
No. 8 (2.36)	0.1 (25)
No. 10 (2.00)	0.1 (25)

12 ~~Note 1: ***If fracture is determined on a sample obtained for gradation, use the mass retained on the individual sieves. If less than 5 percent of the total mass is retained on a single specification sieve, include that material on the next smaller specification sieve.***~~

Procedure

13 1. Where necessary, wash the sample over the sieve or sieves designated to remove any remaining fine material, and dry ~~to a constant mass~~ in accordance with FOP for AASHTO T 255.

Examining aggregate particles

14 2. After cooling, spread the dried sample on a clean, flat surface large enough to permit careful inspection of each particle. To verify that a particle meets the fracture criteria, hold the aggregate particle so that the face is viewed directly.

3. To aid in making the fracture determination separate the sample into three categories:
   - fractured particles meeting the criteria
   - particles not meeting the criteria
   - questionable or borderline particles

4. Determine the dry mass of particles in each category to the nearest 0.1 g.

   Note: If, on any determination, more than 15 percent of the total mass of the sample is placed in the questionable category, repeat the procedure until no more than 15 percent is present in that category.

Calculation

15

Calculate the mass percentage of fractured faces to the nearest 1 percent using the following formula:

$P = [(F + Q/2)/(F+Q+N)]x100$

where: P = Percent of fracture
F = Mass of fractured particles
Q = Mass of questionable or borderline particles.
N = Mass of unfractured particles

Example:

16

F = 632.6 g, Q = 97.6 g, N = 352.3 g

P = [(632.6 g + 97.6 g/2) / (632.6 g + 97.6 g + 352.3 g)] x 100 = 62.9%

17

Report

Results shall be reported on standard forms approved for use by the agency. Report fracture to the nearest 1 percent.

Tips!

18

- Don't forget to get the original mass first.

19

Performance Exam Checklist

Determining the Percentage of Fracture In Coarse Aggregate FOP for WAQTC TM 1

Participant Name _____ Exam Date _____

Procedure Element	Yes	No
1. Sample reduced to correct size?	_____	_____
2. Sample properly sieved through specified sieve(s)?	_____	_____
3. Sample dried and cooled, if necessary?	_____	_____
4. Particles separated into fractured, unfractured, and questionable categories?	_____	_____
5. Dry mass of each category determined to nearest 0.1 g?	_____	_____
6. Calculation performed correctly?	_____	_____
7. Procedure repeated if more than 15 percent of total mass falls into the questionable category?	_____	_____

Comments: First attempt: Pass ☐ Fail ☐ Second attempt: Pass ☐ Fail ☐

_____

_____

_____

_____

_____

_____

_____

_____

_____

_____

Signature of Examiner _____

WSDOT FOP for AASHTO T 2[1]

Standard Practice for Sampling Aggregates

1. Scope

1.1 This practice covers sampling of coarse and fine aggregates for the following purposes:

1.1.1 Preliminary investigation of the potential source of supply,

1.1.2 Control of the product at the source of supply,

1.1.3 Control of the operations at the site of use, and

1.1.4 Acceptance or rejection of the materials.

Note 1: Sampling plans and acceptance and control tests vary with the type of construction in which the material is used. Attention is directed to Practices E 105 and D 3665.

1.2 The values stated in inch-pounds units are to be regarded as the standard.

1.3 This standard does not purport to address all of the safety concerns, if any, associated with its use. It is the responsibility of the user of this standard to establish appropriate safety and health practices and determine the applicability of regulatory limitations prior to use.

2. Referenced Documents

2.1 AASHTO Standards:

T 248 Reducing Samples of Aggregate to Testing Size

2.2 ASTM Standards:

C 702 Practice for Reducing Field Samples of Aggregate to Testing Size
D 2234 Test Method for Collection of a Gross Sample of Coal
D 3665 Practice for Random Sampling of Construction Materials
E 105 Practice for Probability Sampling of Materials
E 122 Practice for Choice of Sample Size to Estimate the Average Quality of a Lot or Process
E 141 Practice for Acceptance of Evidence Based on the Results of Probability Sampling

3. Significance and Use

3.1 Sampling is equally as important as the testing, and the sampler shall use every precaution to obtain samples that will show the nature and condition of the materials which they represent.

3.2 Samples for preliminary investigation tests are obtained by the party responsible for development of the potential source (Note 2). Samples of materials for control of the production at the source or control of the work at the site of use are obtained by the manufacturer, contractor, or other parties responsible for accomplishing the work. Samples for tests to be used in acceptance or rejection decisions by the purchaser are obtained by the purchaser or his authorized representative.

[1]This FOP is based on AASHTO T 2-91 (1996).

Note 2: The preliminary investigation and sampling of potential aggregate sources and types occupies a very important place in determining the availability and suitability of the largest single constituent entering into the construction. It influences the type of construction from the standpoint of economics and governs the necessary material control to ensure durability of the resulting structure, from the aggregate standpoint. This investigation should be done only by a responsible trained and experienced person. For more comprehensive guidance, see the Appendix.

4. SECURING SAMPLES

4.1 General — Where practicable, samples to be tested for quality shall be obtained from the finished product. Samples from the finished product to be tested for abrasion loss shall not be subject to further crushing or manual reduction in particle size in preparation for the abrasion test unless the size of the finished product is such that it requires further reduction for testing purposes.

4.2 Inspection — The material shall be inspected to determine discernible variations. The seller shall provide suitable equipment needed for proper inspection and sampling.

4.3 Procedure

4.3.1 Sampling from a Flowing Aggregate Stream (Bins or Belt Discharge) — Select units to be sampled by a random method, such as Practice D3665, from the production. Obtain at least three approximately equal increments, selected at random from the unit being sampled, and combine to form a field sample whose mass equals or exceeds the minimum recommended in 4.4.2. Take each increment from the entire cross section of the material as it is being discharged. It is ~~usually~~ necessary to have a special device constructed for use at each plant. This device consists of a pan of sufficient size to intercept the entire cross section of the discharge stream and hold the required quantity of material without overflowing. A set of rails may be necessary to support the pan as it is passed under the discharge stream. Insofar as is possible, keep bins continuously full or nearly full to reduce segregation.

Note 3: Sampling the initial discharge or the final few tones from a bin or conveyor belt increases the chances of obtaining segregated material and should be avoided.

4.3.2 Sampling from the Conveyor Belt — Select units to be sampled by a random method, such as Practice D 3665, from the production. Obtain at least three approximately equal increments, selected at random, from the unit being sampled and combine to form a field sample whose mass equals or exceeds the minimum recommended in 4.4.2. Stop the conveyor belt while the sample increments are being obtained. Insert two templates, the shape of which conforms to the shape of the belt in the aggregate stream on the belt, and space them such that the material contained between them will yield an increment of the required weight. Carefully scoop all material between the templates into a suitable container and collect the fines on the belt with a brush and dust pan and add to the container.

4.3.3 Sampling from Stockpiles or Transportation Units — Avoid sampling coarse aggregate or mixed coarse and fine aggregate from stockpiles or transportation units whenever possible, particularly when the sampling is done for the purpose of determining aggregate properties that may be dependent upon the grading of the sample. If circumstances make it necessary to obtain samples from a stockpile of coarse aggregate or a stockpile

of combined coarse and fine aggregate, design a sampling plan for the specific case under consideration. This approach will allow the sampling agency to use a sampling plan that will give a confidence in results obtained therefrom that is agreed upon by all parties concerned to be acceptable for the particular situation. The sampling plan shall define the number of samples necessary to represent lots and sublots of specific sizes. General principles for sampling from stockpiles are applicable to sampling from trucks, rail cars, barges or other transportation units. For general guidance in sampling from stockpiles, see the Appendix.

4.3.4 Sampling from Roadway (Bases and Subbases) — This section has been deleted.

4.4 Number and Masses of Field Samples

4.4.1 The number of field samples (obtained by one of the methods described in 4.3) required depends on the criticality of, and variation in, the properties to be measured. Designate each unit from which a field sample is to be obtained prior to sampling. The number of field samples from the production should be sufficient to give the desired confidence in test results.

Note 4: Guidance for determining the number of samples required to obtain the desired level of confidence in test results may be found in Test Method D 2234, Practice E 105, Proactive E 122, and Practice E 141.

4.4.2 The field sample masses cited are tentative. The masses must be predicated on the type and number of tests to which the material is to be subjected and sufficient material obtained to provide for the proper execution of these tests. Standard acceptance and control tests are covered by ASTM standards and specify the portion of the field sample required for each specific test. Generally speaking, the amounts specified in Table 1 will provide adequate material for routine grading and quality analysis. Extract test portions from the field sample according to T 248 or as required by other applicable test methods.

5. SHIPPING SAMPLES

5.1 Transport aggregates in bags or other containers so constructed as to preclude loss or contamination of any part of the sample, or damage to the contents from bang during shipment.

5.2 Shipping containers for aggregate samples shall have suitable individual identification attached and enclosed so that field reporting, laboratory logging, and test reporting may be facilitated.

<u>All samples submitted for testing to the region or FOSSC laboratories shall be accompanied with a completed sample transmittal (WSDOT Form 350-056) or equivalent.</u>

Table 1
Size of Samples

~~Maximum Nominal Size of Aggregates[A]~~	~~Approximate Minimum Mass of Field Samples, kg[B]~~
~~Fine Aggregate~~	
~~2.36 mm~~	~~10~~
~~4.75 mm~~	~~10~~
~~Coarse Aggregate~~	
~~9.5 mm~~	~~10~~
~~12.5 mm~~	~~15~~
~~19.0 mm~~	~~25~~
~~25.0 mm~~	~~50~~
~~37.5 mm~~	~~75~~
~~50 mm~~	~~100~~
~~63 mm~~	~~125~~
~~75 mm~~	~~150~~
~~90 mm~~	~~175~~

Nominal Maximum Size* in (mm)	**Minimum Mass lb (kg)**
No. 4 (4.75)	5 (2)
1/4 (6.3)	10 (4)
3/8 (9.5)	10 (4)
1/2 (12.5)	20 (8)
5/8 (16.0)	20 (8)
3/4 (19.0)	30 (12)
1 (25.0)	55 (25)
1 1/4 (31.5)	70 (30)
1 1/2 (37.5)	80 (36)
2 (50)	90 (40)
2 1/2 (63)	110 (50)
3 (75)	140 (60)
3 1/2 (90)	180 (80)

[A]For ~~processed~~ aggregate the nominal maximum size of particles is the largest sieve size listed in the applicable specification, upon which any material is permitted to be retained.

~~[B]For combined coarse and fine aggregates (for example, base or subbase) minimum weight shall be coarse aggregate minimum plus 10 kg.~~

Note 5: For an aggregate specification having a generally unrestrictive gradation (i. e. wide range of permissible upper sizes), where the source consistently fully passes a screen substantially smaller than the maximum specified size, the nominal maximum size, for the purpose of defining sampling and test specimen size requirements may be adjusted to the screen, found by experience to retain no more than 5% of the materials.

APPENDIXES (Nonmandatory Information)

Xl. SAMPLING AGGREGATE FROM STOCKPILES OR TRANSPORTATION UNITS

X1.1 Scope

X1.1.1 In some situations it is mandatory to sample aggregates that have been stored in stockpiles or loaded into rail cars, barges, or trucks. In such cases the procedure should ensure that segregation does not introduce a serious bias in the results.

Xl.2 Sampling From Stockpiles

X1.2.1 In sampling material from stockpiles it is very difficult to ensure unbiased samples, due to the segregation which often occurs when material is stockpiles, with coarser particles rolling to the outside base of the pile. For coarse or mixed coarse and fine aggregate, every effort should be made to enlist the services of power equipment to develop a separate, small sampling pile composed of materials drawn from various levels and locations in the main pile after which several increments may be combined to compose the field sample. If necessary to indicate the degree of variability existing within the main pile, separate samples should be drawn from separate areas of the pile.

X1.2.2 Where power equipment is not available, samples from stockpiles should be made up of at least three increments taken from the top third, at the mid-point, and at the bottom third of the volume of the pile. A board shoved vertically into the pile just above the sampling point aids in preventing further segregation. In sampling stock-piles of fine aggregate the outer layer, which may have become segregated, should be removed and the sample taken from the material beneath. Sampling tubes approximately 30-mm min by 2-m min in length may be inserted into the pile at random locations to extract a minimum of five increments of material to form the sample.

Xl.3 Sampling From Transportation Units

X 1.3.1 In sampling coarse aggregates from railroad cars or barges, effort should be made to enlist the services of power equipment capable of exposing the material at various levels and random locations. Where power equipment is not available, a common procedure requires excavation of three or more trenches across the unit at points that will, from visual appearance, give a reasonable estimate of the characteristics of the load. The trench bottom should be approximately level, at least 0.3 m in width and in depth below the surface. A minimum of three increments from approximately equally spaced points along each trench should be taken by pushing a shovel downward into the material. Coarse aggregate in trucks should be sampled in essentially the same manner as for rail cam or barges, except for adjusting the number of increments according to the size of the truck. For fine aggregate in transportation units, sampling tubes as described in Xl.2 may be used to extract an appropriate number of increments to form the sample.

X2. EXPLORATION OF POTENTIAL AGGREGATE SOURCES

X2.1 Scope

X2.1.1 Sampling for evaluation of potential aggregate sources should be performed by a responsible trained and experienced person. Because of the wide variety of conditions under which sampling may have to be done it is not possible to describe detailed procedures applicable to all circumstances. This appendix is intended to provide general guidance and list more comprehensive references.

X2.2 Sampling Stone from Quarries of Ledges

X2.2.1 Inspection — The ledge or quarry face should be inspected to determine discernible variations or strata. Differences in color and structure should be recorded.

X2.2.2 Sampling and Size of Sample — Separate samples having a mass of at least 25 kg should be obtained from each discernible stratum. The sample should not include material weathered to such an extent that it is no longer suitable for the purpose intended. One or more pieces in each sample should be at least 150 by 150 by 100 mm in size with the bedding plane plainly marked, and this piece should be free of seams or fractures.

X2.2.3 Record — In addition to the general information accompanying all samples the following information should accompany samples taken from ledges or quarry faces:

X2.2.3.1 Approximate quantity available. (If quantities is very large this may be recorded as practically unlimited.)

X2.2.3.2 Quantity and character of overburden.

X2.2.3.3 A detailed record showing boundaries and location of material represented by each sample.

Note X2.1: A sketch, plan, and elevation, showing the thickness and location of the different layers is recommended for this purpose.

X2.3 Sampling Roadside or Bank Run Sand and Gravel Deposits

X2.3.1 Inspection — Potential sources of bank run sand and gravel may include previously worked pits from which there is an exposed face or potential deposits discovered through air-photo interpretation, geophysical exploration, or other types of terrain investigation.

X2.3.2 Sampling — Samples should be so chosen from each different stratum in the deposit discernible to the sampler. An estimate of the quantity of the different materials should be made. If the deposit is worked as an open-face bank or pit, samples should be taken by channeling the face vertically, bottom to top, so as to represent the materials proposed for use. Overburdened or disturbed material should not be included in the sample. Test holes should be excavated or drilled at numerous locations in the deposit to determine the quality of the material and the extent of the deposit beyond the exposed face, if any. The number and depth of test holes will depend upon the quantity of the material needed, topography of the area, nature of the deposit, character of the material, and potential value of the material in the deposit. If visual inspection indicates that there is considerable variation in the material, individual samples should

be selected from the material in each well defined stratum. Each sample should be thoroughly mixed and quartered if necessary so that the field sample thus obtained will be at least 25 lb (12 kg) for sand and 75 lb (35 kg) if the deposit contains an appreciable amount of coax aggregate.

X2.3.3 Record — In addition to the general information accompanying all samples the following information should accompany samples of bank run sand and gravel:

X2.3.3.1 Location of supply.

X2.3.3.2 Estimate of approximate quantity available.

X2.3.3.3 Quantity and character of overburden.

X2.3.3.4 Length of haul to proposed site of work.

X2.3.3.5 Character of haul (kind of road, maximum grades, etc.)

X2.3.3.6 Details as to extent and location of material represented by each sample.

Performance Exam Checklist

Sampling of Aggregates
FOP for AASHTO T 2

Participant Name _____ Exam Date _____

Procedure Element	Yes	No
General		
1. Samples taken in at least three increments?	_____	_____
2. Increments mixed thoroughly to form sample?	_____	_____
Conveyor Belts – Method A		
3. Belt stopped?	_____	_____
4. Sampling device set on belt, avoiding intrusion of adjacent material?	_____	_____
5. Sample, including all fines, scooped off?	_____	_____
Conveyor Belts – Method B		
6. Container passed through full stream of material as it runs off end of belt? (Automatic Sampler Only)	_____	_____
Transport Units		
7. Three or more trenches cut across the unit?	_____	_____
8. Trench bottom level and approximate 1 foot wide and 1 foot below surface of material inunit?	_____	_____
9. Three samples taken at equal spacing along each trench?	_____	_____
Stockpiles		
10. Created vertical face, if one does not exist?	_____	_____
11. At least three increments taken, at various levels along vertical face?	_____	_____

Procedure Element	Yes	No
13. If vertical face cannot be created, increments taken from at least three locations from top, middle, and bottom?	_____	_____
14. When sampling sand, outer layer removed and increments taken from at least five locations?	_____	_____

Comments: First attempt: Pass ☐ Fail ☐ Second attempt: Pass ☐ Fail ☐

_____

_____

_____

_____

_____

_____

_____

_____

_____

_____

Signature of Examiner _____

SAMPLING FRESHLY MIXED CONCRETE
FOP FOR WAQTC TM 2

01

Significance

Testing fresh concrete in the field begins with obtaining and preparing the sample to be tested. Standardized procedures for obtaining a representative sample from various types of mixing and/or agitating equipment have been established. Specific time limits regarding when tests for temperature, slump, and air content must be started and for when the molding of test specimens must begin are also established.

02

Sampling from truck mixer

03

Technicians must be patient and refrain from obtaining the sample too quickly. Doing so would be a violation of the specifications under which the concrete is being supplied and it may result in a nonrepresentative sample of concrete. If one considers that the specifications may require strength tests to be made only once every 50 cy (40 m^3), the need for a truly representative sample is apparent. The minimum 1 ft^3 (0.03 m^3) sample from which the compressive strength test specimens will be made represents only 0.07 to 0.08 percent of the total quantity of concrete placed. For this reason, every precaution must be taken to obtain a sample that is truly representative of the entire batch and then to protect that sample from the effects of evaporation, contamination, and physical damage.

04

Scope

This procedure provides instruction for obtaining samples of fresh concrete in accordance with WAQTC TM 2. Sources covered include stationary and paving mixers, revolving drum truck mixers or agitators, open-top truck mixers and the discharge of pump or conveyor placement systems.

Sampling apparatus

05

Apparatus

- Wheelbarrow
- Cover for wheelbarrow (plastic, canvas, or burlap)
- Shovel
- 5 gal (19 L) bucket for water

Procedure

Use every precaution in order to obtain samples representative of the true nature and condition of the concrete being placed. The size of the sample will be 1.5 times the volume of concrete required for the specified testing, but not less than 1 ft^3 (0.03 m^3).

Random Sample Selection

WSDOT has added this section.

Concrete samples other than initial load samples or samples for questioned acceptance will be taken from each sublot by a random selection. Sublots are determined by the designated sampling frequency in the *Standard Specifications*. Random selection will be accomplished by using the random number table attached. The "X" value in the table is a decimal fraction of the sublot of concrete which will be used to determine the approximate cubic yard of concrete to be sampled.

In order to determine which "X" value to use, the table is first entered on a line chosen by chance. As a suggestion, select a line corresponding to the last two numbers on the first civilian license plate you see or other acceptable random means. Subsequent "X" values for following sublots on the same day are taken from the lines which follow. Start each day with an "X" value determined by chance in order to obtain a random selection.

The cubic meter (yard) selected for sampling will be "X" value multiplied by the sublot quantity. After the cubic yard for sampling has been selected, the load delivered which contains this cubic yard will be sampled as outlined in this test method.

Table of Random Numbers

X	X	X	X	X
(1) 0.186	(21) 0.256	(41) 0.201	(61) 0.508	(81) 0.431
(2) 0.584	(22) 0.753	(42) 0.699	(62) 0.884	(82) 0.509
(3) 0.965	(23) 0.108	(43) 0.785	(63) 0.648	(83) 0.962
(4) 0.044	(24) 0.626	(44) 0.874	(64) 0.398	(84) 0.315
(5) 0.840	(25) 0.885	(45) 0.604	(65) 0.142	(85) 0.721
(6) 0.381	(26) 0.418	(46) 0.087	(66) 0.962	(86) 0.637
(7) 0.756	(27) 0.320	(47) 0.334	(67) 0.516	(87) 0.056
(8) 0.586	(28) 0.098	(48) 0.189	(68) 0.615	(88) 0.905
(9) 0.480	(29) 0.791	(49) 0.777	(69) 0.226	(89) 0.195
(10) 0.101	(30) 0.717	(50) 0.704	(70) 0.881	(90) 0.981
(11) 0.282	(31) 0.868	(51) 0.946	(71) 0.369	(91) 0.600
(12) 0.957	(32) 0.583	(52) 0.426	(72) 0.001	(92) 0.044
(13) 0.377	(33) 0.385	(53) 0.266	(73) 0.744	(93) 0.433
(14) 0.456	(34) 0.465	(54) 0.791	(74) 0.229	(94) 0.762
(15) 0.778	(35) 0.101	(55) 0.711	(75) 0.906	(95) 0.678
(16) 0.243	(36) 0.285	(56) 0.122	(76) 0.413	(96) 0.347
(17) 0.578	(37) 0.829	(57) 0.895	(77) 0.827	(97) 0.274
(18) 0.966	(38) 0.998	(58) 0.371	(78) 0.984	(98) 0.114
(19) 0.373	(39) 0.539	(59) 0.221	(79) 0.641	(99) 0.480
(20) 0.834	(40) 0.060	(60) 0.011	(80) 0.068	(100) 0.685

Once the two digit number is selected the corresponding four digit number becomes the factor for determining the selection of the next sample.

Example:

Using an acceptable random number program from a hand held calculator, the last digit for a license plate or other acceptable means, determine a random number.

For this example the random number selected is “37.” Enter the table at (37) and the corresponding four digit number is 0.829, this is the factor.

Based on the delivery of 10 cubic yard loads to the project. This would be adjusted by the quantity of concrete actually being delivered per load.

Next five trucks loads => 10 CY x 5 = 50 CY

50 CY x 0.829 = 41.45 CY to be sampled

Therefore, the sample will be taken from the truck containing the 41st CY. After approximately a CY of concrete has been discharged the sample should be taken. This is actually the seventh truck

load delivered to the project this day as the first two truck loads were sampled before the random selection process started. The process would continue for the next sample using “38” then “39” etc. For the next days concrete delivery and placement a new random number would be selected and the process repeated.

06 • **Sampling from stationary mixers, except paving mixers**

Sample the concrete after a minimum of 1/2 yd^3 (.4 m^3) of concrete has been discharged. Perform sampling by passing a receptacle completely through the discharge stream, or by completely diverting the discharge into a sample container. If discharge of the concrete is too rapid to divert the complete discharge stream, discharge the concrete into a container or transportation unit sufficiently large to accommodate the entire batch and then accomplish the sampling in the same manner as given above. Take care not to restrict the flow of concrete from the mixer, container, or transportation unit so as to cause segregation. These requirements apply to both tilting and nontilting mixers.

07 • **Sampling from paving mixers**

Sample after the contents of the paving mixer have been discharged. Obtain material from at least five different locations in the pile and combine into one test sample. Avoid contamination with subgrade material or prolonged contact with absorptive subgrade. To preclude contamination or absorption by the subgrade, sample the concrete by placing a shallow container on the subgrade and discharging the concrete across the container. The container shall be of a size sufficient to provide a sample size that is in agreement with the nominal maximum aggregate size.

08

- **Sampling from revolving drum truck mixers or agitators**

  Sample the concrete after a minimum of 1/2 yd^3 (.4 m^3) of concrete has been discharged. Do not obtain samples until after all of the water has been added to the mixer. Do not obtain samples from the very first or last portions of the batch discharge. Sample by repeatedly passing a receptacle through the entire discharge stream or by completely diverting the discharge into a sample container. Regulate the rate of discharge of the batch by the rate of revolution of the drum and not by the size of the gate opening.

Open-top truck

09

10

- **Sampling from open-top truck mixers, agitators, non-agitating equipment or other types of open-top containers**

  Sample by whichever of the procedures described above is most applicable under the given conditions.

11

- **Sampling from pump or conveyor placement systems**

  Sample after a minimum of 1/2 yd^3 (.4 m^3) of concrete has been discharged. Do not obtain samples until after all of the pump slurry has been eliminated. Sample by repeatedly passing a receptacle through the entire discharge system or by completely diverting the discharge into a sample container. Do not lower the pump arm from the placement position to ground level for ease of sampling, as it may modify the air content of the concrete being sampled. Do not obtain samples from the very first or last portions of the batch discharge.

Sampling at pump discharge

12

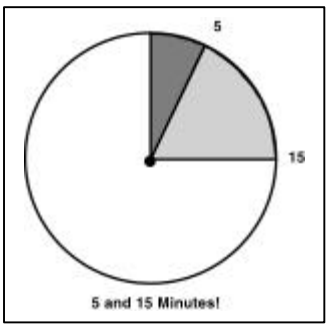

Time from sampling to start of tests

13

Transport samples to the place where fresh concrete tests are to be performed and specimens are to be molded. Protect the sample from direct sunlight, wind, rain, and sources of contamination. The sample shall be remixed to insure uniformity.

Complete test for temperature and start tests for slump and air content within five minutes of obtaining the sample. Complete tests as expeditiously as possible. Start molding specimens for strength tests within 15 minutes of obtaining the sample.

Tips!

14

- Be patient
- Read the specs
- Start tests within the time specified
- Organize all the equipment in advance

15

Performance Exam Checklist

Sampling Freshly Mixed Concrete
FOP for WAQTC TM 2

Participant Name _____ Exam Date _____

Procedure Element	**Yes**	**No**
1. Obtain a representative sample:		
a. Sample the concrete after ½ cy (½ m^3) discharged?	_____	_____
b. Pass receptacle through entire discharge stream or completely divert discharge stream into sampling container?	_____	_____
c. Transport samples to place of testing?	_____	_____
d. Minimum size of sample used for strength tests 1 ft^3 (0.03 m^3)?	_____	_____
2. Start tests for slump and air within 5 minutes of sample being obtained?	_____	_____
3. Start molding cylinders within 15 minutes of sample being obtained?	_____	_____
4. Protect sample against rapid evaporation and contamination?	_____	_____

Comments: First attempt: Pass ☐ Fail ☐ Second attempt: Pass ☐ Fail ☐

_____

_____

_____

_____

_____

_____

_____

_____

_____

_____

Signature of Examiner _____

This checklist is derived, in part, from copyrighted material printed in ACI CP-1, published by the American Concrete Institute.

MOISTURE CONTENT OF BITUMINOUS MIXES BY OVEN FOP FOR WAQTC TM 6

Significance

01 Even though aggregate used in bituminous mixes is
02 heated and dried at high temperatures, some types of rock retain moisture. The moisture content of the mix must be known in order to correctly determine the asphalt cement binder content of the mix. Moisture (water) in the mix will yield erroneously high binder content values whether binder content is determined by the nuclear content gauge or ignition furnace method.

Scope

This procedure covers the determination of moisture content of bituminous mixes in accordance with WAQTC TM 6.

Background on Test Method

03 A test sample of bituminous mix is dried in an oven. ~~The moisture content is calculated by one of two methods depending upon agency standards.~~

- When binder content is reported as a percent of the initial mass of bituminous mix, moisture content is reported as a percent of the initial, moist mass of mix.
- ~~When binder content is reported as a percent of the mass of aggregate, moisture content is reported as a percent of the final, dry mass of mix.~~

Oven

Apparatus

04

- Balance or scale: 2 kg capacity, readable to 0.1 g
- Forced Air, Ventilated, or Convection Oven: Capable of maintaining the temperature surrounding the sample at 163 ±14°C (325 ±25°F)

05

Sampling from transport

- Sample Container: Not affected by heat and of sufficient size to contain a test sample of at least 1,000 g without danger of spilling

Sample

The test sample shall be obtained in accordance with FOP for AASHTO T 168, and reduced in accordance with WSDOT Test Method 712. The size of the test sample shall be a minimum of 500 g.

~~The test sample shall be obtained in accordance with AASHTO T 168, and reduced in accordance with AASHTO T 248, Method B. The size of the test sample shall be a minimum of 500 g.~~

Procedure

06

1. Determine and record the mass of the sample container to the nearest 0.1 g.
2. Record the temperature of the test sample.
3. Place the test sample in the sample container, and determine and record the total mass of the sample container and test sample to the nearest 0.1 g.
4. Calculate the initial, moist mass of the test sample by subtracting the mass of the sample container determined in Step 1 from total mass of the sample container and the test sample determined in Step 2.
5. Dry the test sample to a constant mass in the sample container.

   Note 1: Constant mass shall be defined as the mass at which further drying at 163 ±14°C (325 ±25°F) does not alter the mass by more than 0.1 percent. The sample shall be initially dried 90 minutes, and its mass determined at that time and at 30-minute intervals after that until a constant mass is reached.

6. Cool the sample container and test sample to approximately the same temperature as determined in Step 3.
7. Determine and record the total mass of the sample container and test sample to the nearest 0.1 g.

Quartered sample

07

08

Mass determination

Note 2: Do not attempt to remove the test sample from the sample container for the purposes of determining mass.

8. Calculate the final, dry mass of the test sample by subtracting the mass of the sample container determined in Step 1 from the total mass of the sample container and the test sample determined in Step 7.

Note 3: Moisture content and the number of samples in the oven will affect the rate of drying at any given time. Placing wet samples in the oven with nearly dry samples could affect the drying process.

Calculations

~~Calculate the moisture content, as a percent, using one of the following two formulas.~~

Percent of Initial, Moist Mass:

09

$$\text{Moisture Content} = \frac{M_i - M_f}{M_i} \times 100$$

where M_i = initial, moist mass
M_f = final, dry mass

Example:

M_i = 541.2 g
M_f = 536.0 g

$$\text{Moisture Content} = \frac{541.2\,\text{g} - 536.0\,\text{g}}{541.2\,\text{g}} \times 100 = 0.961, \text{ say } 0.96\%$$

11

Report

Results shall be reported on standard forms approved for use by the agency. Report moisture content to 0.1 percent.

Report the moisture content on DOT Form 350-560EF.

12

Tips!

- Remember: Moisture content is expressed as a percent of initial, moist mass when binder content is reported as a percent of mix mass.
- Remember: Moisture content is expressed as a percent of final, dry mass when binder content is reported as a percent of aggregate mass.

13

Performance Exam Checklist

Moisture Content of Bituminous Mixes By Oven
FOP for WAQTC TM 6

Participant Name _____ Exam Date _____

Procedure Element	**Yes**	**No**
Test for Moisture		
1. Representative sample obtained; 500 g minimum?	_____	_____
2. Mass of sample determined to nearest 0.1 g?	_____	_____
3. Initial temperature recorded?	_____	_____
4. Sample placed in drying oven for a minimum of 90 minutes?	_____	_____
5. Sample dried to a constant weight at 163 ±14°C?	_____	_____
6. Sample and container cooled to approximately the initial temperature before mass determined?	_____	_____
7. Calculation of moisture content performed correctly?	_____	_____

% Moisture as percent of Wet Mass

$$\frac{M_i - M_f}{M_i} \times 100$$

Comments: First attempt: Pass ☐ Fail ☐ Second attempt: Pass ☐ Fail ☐

_____

_____

_____

_____

_____

_____

_____

_____

_____

_____

Signature of Examiner _____

IN-PLACE DENSITY OF BITUMINOUS MIXES USING THE NUCLEAR MOISTURE-DENSITY GAUGE
FOP FOR WAQTC TM 8

Significance

01

02 The final in-place density of roadway pavement is critical to the quality and longevity of a highway project. Low density material will lead to excessive deflection under load and/or permanent deformation.

This procedure provides a rapid, nondestructive technique for determining the in-place density of compacted bituminous mixes. It can be used to establish the proper rolling effort and pattern to achieve the required density. The non-destructive nature of the test allows repetitive measurements to be made at a single test location between roller passes.

Scope

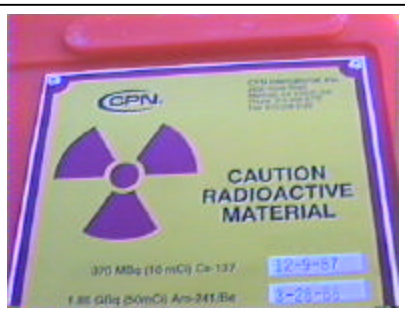

Caution!

03 This procedure covers the determination of density of bituminous mixes in accordance with WAQTC TM 8. Direct transmission and backscatter methods are covered. Correlation with densities determined under the FOP for AASHTO T 166~~ is required by some agencies~~.

All operators will be trained in radiation safety prior to operating nuclear density gauges. ~~Some agencies~~ WSDOT requires ~~the use of personal monitoring devices such as~~ a thermoluminescent dosimeter or film badge which is monitored on a quarterly basis.

04

Apparatus

- Nuclear density gauge with the factory matched standard reference block.
- Drive pin, guide, scraper plate, and hammer for testing in direct transmission mode.
- Transport case for properly shipping and housing the gauge and tools.
- Instruction manual for the specific make and model of gauge.

Nuclear gauge

06

- Radioactive materials information and calibration packet containing:
  - Daily Standard Count Log
  - Factory and Laboratory Calibration Data Sheet
  - Leak Test Certificate
  - Shippers Declaration for Dangerous Goods
  - Procedure Memo for Storing, Transporting and Handling Nuclear Testing Equipment
  - Other radioactive materials documentation as required by local regulatory requirements.

~~Material~~

07 ~~• Filler material: Fine graded sand from the source used to produce the asphalt pavement or~~
08 ~~other agency approved materials.~~

09

Calibration and Standardization

<u>WSDOT determines the standard count as listed in the manufacturer's Operators Manual.</u>

~~1. Calibrate the nuclear gauge as required by the agency. This calibration may be performed by the agency using manufacturer's recommended procedures or by other facilities approved by the agency.~~

~~2. Standardize the nuclear gauge at the construction site at the start of each day's work and as often as deemed necessary by the operator or agency. Turn the gauge on and allow it to stabilize for 10 to 20 minutes prior to standardization. Record the standard count for both density and moisture in the Daily Standard Count Log. The exact procedure for standard count is listed in the manufacturer's Operators Manual.~~

~~***Note 1:*** Daily variations in standard count shall not exceed the daily variations established by the manufacturer of the gauge. If the daily variations are exceeded after repeating the standardization procedure, the gauge should be repaired and or recalibrated.~~

Procedure

10 The standard for WSDOT is to run density tests in "Direct Transmission mode." When the depth of Hot Mix Asphalt is less than 0.11 foot or when the driving of the drive pin is not possible to achieve the required depth for the gauge probe (i.e., underlying concrete) then a "Thin Lift Density gauge" or a Moisture Density Gauge in the "Thin Layer mode" will be allowed.

1. Turn the gauge on and allow it to stabilize for 10 to 20 minutes prior to use, and leave the power on during the day's testing.

2. Standardize the gauge by performing standard counts as listed in the manufacturer's Operators Manual.

~~2. Standardize the gauge by performing standard counts as covered in Step 2 above under Calibration and Standardization.~~

~~*Note 2:* New standard counts may be necessary more than once a day. See agency requirements.~~

3. Select a test location(s) in accordance with the project specifications. Test sites should be relatively smooth and flat. The gauge should not be used within 1.5 ft. (450 mm) to any vertical mass, or from a vertical pavement edge.

~~3. Select a test location(s) in accordance with the project specifications. Test sites should be relatively smooth and flat. If the gauge will be closer than 600 mm (24 in.) to any vertical mass, or less than 300 mm (12 in.) from a vertical pavement edge, use the gauge manufacturer's correction procedure.~~

4. Maintain maximum contact between the base of the gauge and the surface of the material under test.

~~4. Maintain maximum contact between the base of the gauge and the surface of the material under test. Use filler material to fill surface voids. Spread a small amount of filler material over the test site surface and distribute it evenly. Strike off the surface with a straight edge guide or scraper plate, and remove excess material.~~

~~5. Mark the outline or footprint of the gauge with a crayon.~~

11 6. Direct transmission mode

a. Use the guide and scraper plate as a template and drill a hole to a depth of at least 7 mm (0.3 in.) deeper than the measurement depth required for the gauge.

b. Place the gauge on the prepared surface so the source rod can enter the hole. Insert the probe in the hole and lower the source rod to the desired test depth using the handle and trigger mechanism.

Pull the gauge so that the probe is firmly against the side of the hole.

~~b. Place the gauge on the test site and extend the probe to a depth not to exceed the thickness of the lift of pavement being measured. Pull the gauge so that the probe is firmly against the side of the hole.~~

~~Note: If the depth of the pavement lift under test is less than the depth of measurement of the gauge, the test count must be adjusted.~~

c. Take a one-minute test and record. Rotate the gauge 90 degrees. Reseat the gauge by gently moving it side to side while pulling back. Take another one-minute test and record.

Nuclear gauge

12 7. Backscatter mode

a. Place the gauge on the test site and extend the probe to the backscatter position.

b. Take tests in accordance with manufacturer's recommendation.

~~b. Take a one-minute test and record. Rotate the gauge 90 degrees about the probe. Take another one-minute test and record.~~

~~***Note 3***: If the difference between the two one minute tests is greater than 3 lb/ft^3 (50 kg/m^3), retest in both directions.~~

13 **Calculation of Results**

See WSDOT SOP 729 to determine the percent compaction. It should be stressed that the numbers obtained with the nuclear gauge are simply in-place densities and tell the operator nothing in regard to relative compaction. In-place densities are to be compared with theoretical maximum density as determined by the FOP for AASHTO T 209.

~~The density reported for each test site shall be the average of the two individual one-minute tests.~~

~~Percent compaction is determined by comparing the in-place wet density as determined by this method to the appropriate agency density standard. See appropriate agency policy for use of density standards.~~

14 **Correlation with Cores**

Refer to WSDOT SOP 730.

> ~~***Note 4***: When density correlation with test method AASHTO T 166 is required, correlation of the nuclear gauge with pavement cores shall be made on the first day's paving (within 24 hours) or from a test strip constructed prior to the start of paving. Cores must be taken before traffic is allowed on the pavement.~~

15

1. ~~Determine the number of cores required for correlation from the agency's specifications. Cores shall be located on the first day's paving or on the test strip. Locate the test sites in accordance with the agency's specifications. Follow the "Procedure" section above to establish test sites and obtain densities using the nuclear gauge.~~
2. ~~Obtain a pavement core from each of the test sites. The core should be taken from the center of the nuclear gauge footprint. If direct transmission was used, locate the core at least 25 mm (1 in.) away from the edge of the drive pin hole.~~

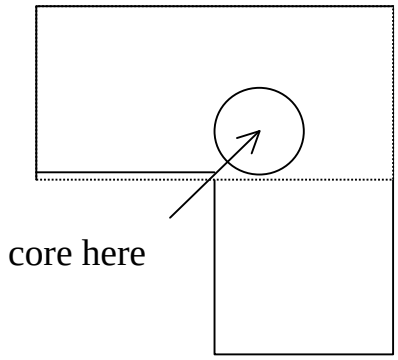

Core location inside gauge footprint

16 ~~3. Determine the density of the cores by AASHTO T 166, Bulk Specific Gravity of Compacted Bituminous Mixtures Using Saturated Surface-Dry Specimens.~~

~~4. Calculate a correlation factor for the nuclear gauge reading as follows.~~

~~a. Calculate the difference between the core density and nuclear gauge density at each test site to the nearest 1 kg/m^3 (0.1 lb/ft^3) Calculate the average difference and standard deviation of the differences for the entire data set to the nearest 1 kg/m^3 (0.1 lb/ft^3).~~

~~b. If the standard deviation of the differences is equal to or less than 40 kg/m^3 (2.5 lb/ft^3), the correlation factor applied to the nuclear density gauge reading shall be the average difference calculated above in 4.a.~~

17 ~~c. If the standard deviation of the differences is greater than 40 kg/m^3 (2.5 lb/ft^3), the test site with the greatest variation from the average difference shall be eliminated from the data set and the data set properties and correlation factor recalculated following 4.a and 4.b.~~

18 ~~d. If the standard deviation of the modified data set still exceeds the maximum specified in 4.b, additional test sites will be eliminated from the data set and the data set properties and correlation factor recalculated following 4.a and 4.b. If the data set consists of less than five test sites, additional test sites shall be established.~~

~~***Note 5:*** The exact method used in calculating the Nuclear Gauge Correlation Factor shall be defined by agency policy.~~

19 ~~***Note 6:*** The above correlation procedure must be repeated if there is a new job mix formula. Adjustments to the job mix formula beyond tolerances established in the contract documents will constitute a new job mix formula. A correlation factor established using this procedure is only valid for the particular gauge and in the mode and at the probe depth used in the correlation procedure. If another gauge is brought onto the project, it shall be correlated using the same procedure. Multiple~~

~~gauges may be correlated from the same series of cores if done at the same time. The same correlation factor may be used on different contracts when using the same combination of job mix formula and gauge. It may also be used when using different surfacing or overlay materials.~~

~~***Note 7:*** For the purpose of this procedure, a job mix formula is defined as the percent and grade of paving asphalt used with a specified gradation of aggregate from a designated aggregate source. A new job mix formula may be required whenever compaction of the wearing surface exceeds the agency's specified maximum density or minimum air voids.~~

20 **Report**

Report the test results for each sublot on WSDOT Form 350-092.

~~Results shall be reported on standard forms approved by the agency. Include the following information:~~

- ~~Location of test and thickness of layer tested~~
- ~~Mixture type~~
- ~~Make, model and serial number of the nuclear moisture-density gauge~~
- ~~Mode of measurement, depth, calculated wet density of each measurement and any adjustment data~~
- ~~Standard density~~
- ~~Percent compaction and/or percent air voids~~
- ~~Name and signature of operator~~

Tips! 21

- Check to make sure that:
  - base of gauge is clean prior to testing
  - shutter block and assembly are free of debris and operating correctly
  - source rod tip does not have a build up of material on end
  - gauge is reading the proper position of the source rod when it is indexed, and that it has been seated correctly
  - when direct transmission is used, hole into which the source is lowered is at least 7 mm (0.3 in.) deeper than the indexed position of the source rod 22
  - surface is flat and the gauge does not rock
  - surface has been properly prepared using filler material
- Make sure battery is charged before starting work
- Do not leave the gauge on a hot surface for a long time. 23

Tester Qualification Practical Exam Checklist

In-place Density of Bituminous Mixes Using the Nuclear Moisture-Density Gauge FOP for WAQTC TM 8

Participant Name _____ Exam Date _____

Procedure Element	**Yes**	**No**
1. Gauge turned on 10 to 20 minutes before use?	_____	_____
2. Gauge calibrated and standard count recorded?	_____	_____
3. Test location selected appropriately (24 in from vertical projections)?	_____	_____
4. Direct Transmission Mode:		
a. Hole made 7 mm deeper than measurement depth?	_____	_____
b. Gauge place, probe extended, gauge pulled back so probe against hole?	_____	_____
c. One-minute test made; gauge rotated 90°; another one-minute test made?	_____	_____
d. Densities averaged?	_____	_____
5. Backscatter Mode:	_____	_____
a. Gauge placed, probe extended to backscatter position?	_____	_____
b. One-minute test made; gauge rotated 90°; another one-minute test made?	_____	_____
c. Densities averaged?	_____	_____
6. If difference greater than 3 lb/ft^3, retest made?	_____	_____

Comments: First attempt: Pass ☐ Fail ☐ Second attempt: Pass ☐ Fail ☐

_____

_____

_____

_____

_____

_____

_____

_____

_____

_____

Signature of Examiner _____

WSDOT Test Method for AASHTO T 22[1]

Compressive Strength of Cylindrical Concrete Specimens

1. SCOPE

   1.1 This test method covers determination of compressive strength of cylindrical concrete specimens such as molded cylinders and drilled cores. It is limited to concrete having a unit weight in excess of 50 lb/ft^3 [800 kg/m^3].

   1.2 The values stated in English units are the standard.

   1.3 This standard may involve hazardous materials, operations, and equipment. This standard does not purport to address all of the safety problems associated with its use. It is the responsibility of whoever uses this standard to consult and establish appropriate safety and health practices and determine the applicability of regulatory limitations prior to use.

2. REFERENCED DOCUMENTS

   2.1 AASHTO Standards

   T 23 Making and Curing Concrete Test Specimens in the Field
   T 24 Obtaining and Testing Drilled Cores and Sawed Beams of Concrete
   T 64 Standard Practices for Force Verification of Testing Machines
   T 126 Making and Curing Concrete Test Specimens in the Laboratory
   T 231 Capping Cylindrical Concrete Specimens

   2.2 ASTM STANDARDS

   C 683 Test Method for Compressive and Flexural Strength of Concrete Under Field Conditions

   C 873 Test Method for Compressive Strength of Concrete Cylinders Cast in Place in Cylindrical Molds

   E 74 Practice for Calibration of Force-Measuring Instrumentsfor Verifying the Load Indication of Testing Machines3 Manual of Aggregate and Concrete Testing

3. SUMMARY OF TEST METHOD

   3.1 This test method consists of applying a compressive axial load to molded cylinders or cores at a rate which is within a prescribed range until failure occurs. The compressive strength of the specimen is calculated by dividing the maximum load attained during the test by the cross-sectional area of the specimen.

4. SIGNIFICANCE AND USE

   4.1 Care must be exercised in the interpretation of the significance of compressive strength determinations by this test method since strength is not a fundamental or intrinsic property of concrete made from given materials. Values obtained will depend on the size and shape of the specimen, batching, mixing procedures, the methods of sampling, molding, and fabrication and the age, temperature, and moisture conditions during curing.

[1]This Test Method is based on AASHTO T 22-97.

4.2 This test method is used to determine compressive strength of cylindrical specimens prepared and cured in accordance with Methods T23, T24, T126, T231, and ASTM C873.

4.3 The results of this test method are used as a basis for quality control of concrete proportioning, mixing, and placing operations; determination of compliance with specifications; control for evaluating effectiveness of admixtures and similar uses.

5. APPARATUS

5.1 Testing Machine — The testing machine shall be of a type having sufficient capacity and capable of providing the rates of loading prescribed in Section 7.5.

5.1.1 Verification of calibration of the testing machines in accordance with Method T 67 is required under the following conditions:

5.1.1.1 After an elapsed interval since the previous verification of 18 months maximum, but preferably after an interval of 12 months;

5.1.1.2 On original installation or relocation of the machine;

5.1.1.3 Immediately after making repairs or adjustments which may in any way affect the operation of the (weighing) system or the values displayed, except for zero adjustments that compensate for the weighing of tooling, or specimen, or both; or

5.1.1.4 Whenever there is reason to doubt the accuracy of the results, without regard to the time interval since the last verification.

5.1.2 Design — The design of the machine must include the following features:

5.1.2.1 The machine must be power operated and must apply the load continuously rather than intermittently, and without shock. If it has only one loading rate (meeting the requirements of Section 7.5), it must be provided with a supplemental means for loading at a rate suitable for verification. This supplemental means of loading may be power or hand operated.

5.1.2.2 The space provided for test specimens shall be large enough to accommodate, in a readable position, an elastic calibration device which is of sufficient capacity to cover the potential loading range of the testing machine and which complies with the requirements of Practice E 74.

Note 1: The types of elastic calibration devices most generally available and most commonly used for this purpose are the circular proving ring or load cell.

5.1.3 Accuracy — The accuracy of the testing machine shall be in accordance with the following provisions:

5.1.3.1 The percentage of error for the loads within the proposed range of use of the testing machine shall not exceed + 1.0 % of the indicated load.

5.1.3.2 The accuracy of the testing machine shall be verified by applying five test loads in four approximately equal increments in ascending order. The difference between any two successive test loads shall not exceed one third of the difference between the maximum and minimum test loads.

5.1.3.3 The test load as indicated by the testing machine and the applied load computed from the readings of the verification device shall be recorded at each test point. Calculate the error, E, and the percentage of error, Ep , for each point from these data as follows:

$$E = A - B$$
$$Ep = 100(A - B)/B$$

where:
A = load, lbf [kN] indicated by the machine being verified, and
B = applied load, lbf [kN] as determined by the calibrating device.

5.1.3.4 The report on the verification of a testing machine shall state within what loading range it was found to conform to specification requirements rather than reporting a blanket acceptance or rejection. In no case shall the loading range be stated as including loads below the value which is 100 times the smallest change of load estimable on the load-indicating mechanism of the testing machine or loads within that portion of the range below 10% of the maximum range capacity.

5.1.3.5 In no case shall the loading range be stated as including loads outside the range of loads applied during the verification test.

5.1.3.6 The indicated load of a testing machine shall not be corrected either by calculation or by the use of a calibration diagram to obtain values within the required permissible variation.

5.2 The testing machine shall be equipped with two steel bearing blocks with hardened faces (Note 2), one of which is a spherically seated block that will bear on the upper surface of the specimen, and the other a solid block on which the specimen shall rest. Bearing faces of the blocks shall have a minimum dimension at least 3 % greater than the diameter of the specimen to be tested. Except for the concentric circles described below, the bearing faces shall not depart from a plane by more than 0.001 in. [0.025 mm] in any 6 in. [150 mm] of blocks 6 in. [150 mm] in diameter or larger, or by more than 0.001 in. [0.025 mm] in the diameter of any smaller block; and new blocks shall be manufactured within one half of this tolerance. When the diameter of the bearing face of the spherically seated block exceeds the diameter of the specimen by more than 0.5 in. [13 mm], concentric circles not more than 0.031 in. [0.8 mm] deep and not more than 0.047 in. [1 mm] wide shall be inscribed to facilitate proper centering.

Note 2: It is desirable that the bearing faces of blocks used for compression testing of concrete have a Rockwell hardness of not less than 55 HRC.

5.2.1 Bottom bearing blocks shall conform to the following requirements:

5.2.1.1 The bottom bearing block is specified for the purpose of providing a readily machinable surface for maintenance of the specified surface conditions (Note 3). The top and bottom surfaces shall be parallel to each other. The block may be fastened to the platen of the testing machine. Its least horizontal dimension shall be at least 3 % greater than the diameter of the specimen to be tested. Concentric circles as described in Section 5.2 are optional on the bottom block.

5.2.1.2 Final centering must be made with reference to the upper spherical block when the lower bearing block is used to assist in centering the specimen. The center of the concentric rings, when provided, or the center of the block itself must be directly below the center of the spherical head. Provision shall be made on the platen of the machine to assure such a position.

5.2.1.3 The bottom bearing block shall be at least 1 in. [25 mm] thick when new, and at least 0.9 in. [22.5 mm] thick after any resurfacing operations, except when the block is in full and intimate contact with the lower platen of the testing machine, the thickness may be reduced to 3/8 in. (10mm).

Note 3: If the testing machine is so designed that the platen itself can be readily maintained in the specified surface condition, a bottom block is not required.

5.2.2 The spherically seated bearing block shall conform to the following requirements:

5.2.2.1 The maximum diameter of the bearing face of the suspended spherically seated block shall not exceed the values given below:

Diameter of Test Specimens in. [mm]	**Maximum Diameter of Bearing Face in. [mm]**
2 [50]	4 [105]
3 [75]	5 [130]
4 [100]	6.5 [165]
6 [150]	10 [255]
8 [200]	11 [280]

Note 4: Square bearing faces are permissible, provided the diameter of the largest possible inscribed circle does not exceed the above diameter.

5.2.2.2 The center of the sphere shall coincide with the surface of the bearing face within a tolerance of + 5 % of the radius of the sphere. The diameter of the sphere shall be at least 75 % of the diameter of the specimen to be tested.

5.2.2.3 The ball and the socket must be so designed by the manufacturer that the steel in the contact area does not permanently deform under repeated use, with loads up to 12 000 psi [82.7 MPa] on the test specimen (Note 5).

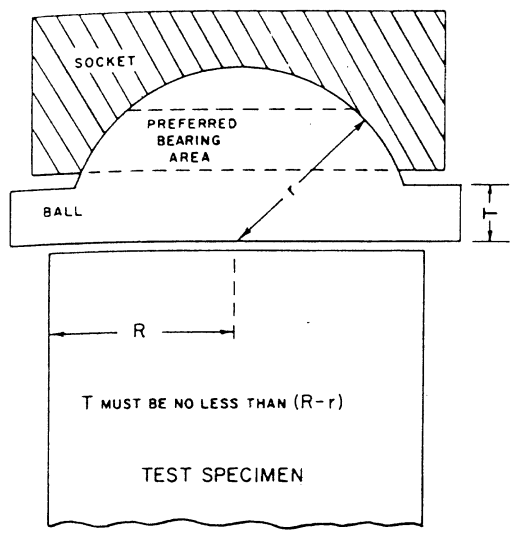

Schematic Sketch of a Typical Spherical Bearing Block
Figure 1

Note: Provision shall be made for holding the ball in the socket and for holding the entire unit in the testing machine.

Note 5: The preferred contact area is in the form of a ring (described as preferredì bearingî area) as shown on Figure 1.

5.2.2.4 The curved surfaces of the socket and of the spherical portion shall be kept clean and shall be lubricated with a petroleum-type oil such as conventional motor oil, not with a pressure type grease. After contacting the specimen and application of small initial load, further tilting of the spherically seated block is not intended and is undesirable.

5.2.2.5 If the radius of the sphere is smaller than the radius of the largest specimen to be tested, the portion of the bearing face extending beyond the sphere shall have a thickness not less than the difference between the radius of the sphere and radius of the specimen. The least dimension of the bearing face shall be at least as great as the diameter of the sphere (see Figure 1).

5.2.2.6 The movable portion of the bearing block shall be held closely in the spherical seat, but the design shall be such that the bearing face can be rotated freely and tilted at least 4° in any direction.

5.3 Load Indication:

5.3.1 If the load of a compression machine used in concrete testing is registered on a dial, the dial shall be provided with a graduated scale that is readable to at least the nearest 0.1 % of the full scale load (Note 6). The dial shall be readable within 1 % of the indicated load at any given load level within the loading range. In no case shall the loading range of a dial be considered to include loads below the value that is 100 times the smallest change of load that can be read on the scale. The scale shall be provided with a graduation line equal to zero and so numbered. The dial pointer shall be of sufficient length to reach the graduation marks; the width of the end of the pointer shall not exceed the clear distance between the smallest graduations. Each dial shall be equipped with a zero adjustment which is easily accessible from the outside of the dial case, and with a suitable device that at all times until reset, will indicate to within 1 % accuracy the maximum load applied to the specimen.

Note 6: As close as can reasonably be read is considered to be 0.02 in. [0.5 mm] along the arc described by the end of the pointer. Also, one half of a scale interval is readable with reasonable certainty when the spacing on the load indicating mechanism is between 0.04 in. [1 mm] and 0.06 in. [2 mm]. When the spacing is between 0.06 and 0.12 in. [2 and 3 mm], one third of a scale interval can be read with reasonable certainty. When the spacing is 0.12 in. [3 mm] or more, one fourth of a scale interval can be read with reasonable certainty.

5.3.2 If the testing machine load is indicated in digital form, the numerical display must be large enough to be easily read. The numerical increment must be equal to or less than 0.10 % of the full scale load of a given loading range. In no case shall the verified loading range include loads less than the minimum numerical increment multiplied by 100. The accuracy of the indicated load must be within 1.0 % for any value displayed within the verified loading range. Provision must be made for adjusting to indicate true zero at zero load. There shall be provided a maximum load indicator that at all times until reset will indicate within 10 % system accuracy the maximum load applied to the specimen.

6. SPECIMENS

6.1 Specimens shall not be tested if any individual diameter of a cylinder differs from any other diameter of the same cylinder by more than 2 %. (Note 7).

Note 7: This may occur when single use molds are damaged or deformed during shipment, when flexible single use molds are deformed during molding or when a core drill deflects or shifts during drilling.

6.2 Neither end of compressive test specimens when tested shall depart from perpendicularity to the axis by more than 0.5∞ (approximately equivalent to 0.12 in (1.6mm) for a 6 in. (152mm) diameter cylinder). The ends of compression test specimens that are not plane within 0.002 in. [0.050 mm] shall be capped, sawed or ground in accordance with T 231 or if the ends meet the requirements of A6, then neopreme caps with steel controllers may be used instead of capping. The diameter used for calculating the cross-sectional area of the test specimen shall be determined to the nearest 0.01 in. [0.25 mm] by averaging two diameters measured at right angles to each other at about mid-height of the specimen.

6.3 The number of individual cylinders measured for determination of average diameter may be reduced to one for each ten specimens or three specimens per day, whichever is greater, if all cylinders are known to have been made from a single lot of reusable or single-use molds which consistently produce specimens with average diameters within a range of 0.02 in. [0.5 mm]. When the average diameters do not fall within the range or when the cylinders are not made from a single lot of molds, each cylinder tested must be measured and the value used in calculation of the unit compressive strength of that specimen. When the diameters are measured at the reduced frequency, the cross-sectional areas of all cylinders tested on that day shall be computed from the average of the diameters of the three or more cylinders representing the group tested that day.

6.4 The length shall be measured to the nearest 0.05 D when the length to diameter ratio is less than 1.8, or more than 2.2, or when the volume of the cylinder is determined from measured dimensions.

7. PROCEDURE

7.1 Compression tests of moist-cured specimens shall be made as soon as practicable after removal from moist storage.

7.2 Test specimens shall be kept moist by any convenient method during the period between removal from moist storage and testing. They shall be tested in the moist condition.

7.3 All test specimens for a given test age shall be broken within the permissible time tolerances prescribed as follows:

Test Age	**Permissible Tolerance**
12 h	+ 0.25 h or 2.1 %
24 h	+ 0.5 h or 2.1 %
3 days	2 h or 2.8 %
7 days	6 h or 3.6 %
28 days	20 h or 3.0 %
90 days	2 days 2.2 %

7.4 Placing the SpecimenóPlace the plain (lower) bearing block, with its hardened face up, on the table or platen of the testing machine directly under the spherically seated (upper) bearing block. Wipe clean the bearing faces of the upper and lower bearing blocks and of the test specimen and place the test specimen on the lower bearing block. Carefully align the axis of the specimen with the center of thrust of the spherically seated block. The spherically seated block is to be rotated immediately prior to testing to assure the freedom required in Section 5.2.2.6

7.5 Rate of LoadingóApply the load continuously and without shock.

7.5.1 For testing machines of the screw type, the moving head shall travel at a rate of approximately 0.05 in. [1 mm]/min when the machine is running idle. For hydraulically operated machines, the load shall be applied at a rate of movement (platen to crosshead measurement) corresponding to a loading rate on the specimen within the range of 20 to 50 psi/s [0.15 to 0.35 MPa/s]. The designated rate of movement shall be maintained at least during the latter half of the anticipated loading phase of the testing cycle.

7.5.2 During the application of the first half of the anticipated Loading phase a higher rate of loading shall be permitted.

7.5.3 Make no adjustment in the rate of movement of the platen at any time while a specimen is yielding rapidly immediately before failure.

7.6 Apply the load until the specimen fails, and record the maximum load carried by the specimen during the test. Note the type of failure and the appearance of the concrete.

8. CALCULATION

8.1 Calculate the compressive strength of the specimen by dividing the maximum load carried by the specimen during the test by the average cross-sectional area determined as described in Section 6 and express the result to the nearest 10 psi [0.1 MPa].

8.2 If the specimen length to diameter ratio is less than 1.8, correct the result obtained in Section 8.1 by multiplying by the appropriate correction factor shown in the following table:

L/D:	1.75	1.50	1.25	1.00	
Factor:	0.98	0.96	0.93	0.87	(Note 11)

Note 8: These correction factors apply to lightweight concrete weighing between 100 and 120 lb/ft 3 [1600 and 1920 kg/m 3] and to normal weight concrete. They are applicable to concrete dry or soaked at the time of loading. Values not given in the table shall be determined by interpolation. The correction factors are applicable for nominal concrete strengths from 2000 to 6000 psi [15 to 45 MPa].

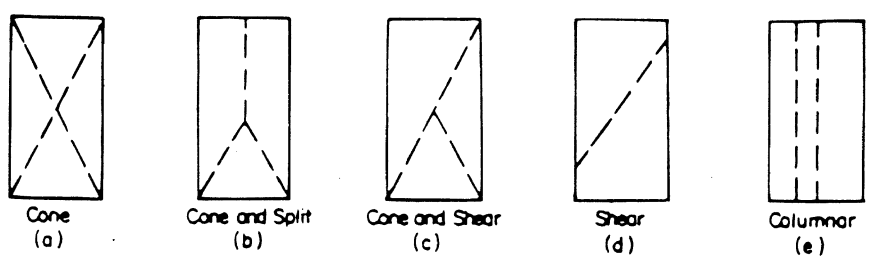

Sketches of Types of Fracture
Figure 2

9. Report

9.1 Report the following information:

9.1.1 Identification number;

9.1.2 Diameter (and length, if outside the range of 1.8D to 2.2D), in inches or millimeters;

9.1.3 Cross-sectional area, in square inches or centimeters;

9.1.4 Maximum load, in pounds-force or newtons;

9.1.5 Compressive strength calculated to the nearest 10 psi or 69kPa;

9.1.6 Type of fracture, if other than the usual cone (see Figure 2);

9.1.7 Defects in either specimen or caps; and

9.1.8 Age of specimen.

10. PRECISION AND BIAS

10.1 Precision — The precision of this method has not been determined, but data are being collected and a precision statement will be included when it is formulated.

ANNEX

Compressive Strength of Cylindrical Concrete Specimens Using Neoprene Caps

A1. SCOPE

A1.1 This method covers the procedure for compressive strength testing of 152 mm (6 in.) diameter by 305 mm (12 in.) concrete cylinders using neoprene caps with steel extrusion controllers. Provisions are made for alternate reusable cap systems which utilize other materials for pads and extrusion controllers than neoprene and steel.

A2. REFERENCED DOCUMENTS

A2.1 AASHTO Standard:

T 231 Capping Cylindrical Concrete Specimens

A2.2 ASTM Standard:

D 2000 Rubber Products in Automotive Applications

A3. SIGNIFICANCE AND USE

A3.1 Use of neoprene caps should be considered as a suitable alternate for compressive strength testing. Alternate reusable cap systems must be verified in accordance with paragraphs A11 through A12.

A4. APPARATUS

A4.1 Two steel extrusion controllers shall be used. An acceptable configuration for extrusion controllers is shown in Figure A1. Other modes of manufacture may be used such as steel casting or machining in one piece from round stock provided the inside diameter, minimum wall thickness, and minimum bearing surface thickness comply with the dimensions shown in Figure A1. All bearing surfaces of the controller, both inside and outside, shall be machine planed to within 0.05 mm (0.002 in.). During use, the outside bearing surface shall be maintained free of gouges, or dents larger than 0.25 mm (0.010 in.) in depth or 32 mm^2 (0.05 $in.^2$) in surface area. Protrusions of any kind will not be allowed.

Table A1
Tolerances

Controller I.D.	0 mm (0″)	+0.3 mm (+$^1/_{32}$″)
Controller wall	-1.6 mm (-$^1/_{16}$″)	+0 mm (+0″)
Any tolerance not specified	-0.4 mm (-$^1/_{64}$″)	+0.4 mm (+$^1/_{64}$″)

A4.2 Caps made from neoprene meeting the requirements of ASTM D 2000, line call-out M2BC514A14B14. The dimensions of the caps shall be 155.6 mm (6 1/8 in.) in diameter and 12.7 mm ($^1/_2$ in.) thick.

A4.3 A compression testing machine meeting the requirements of the main test method.

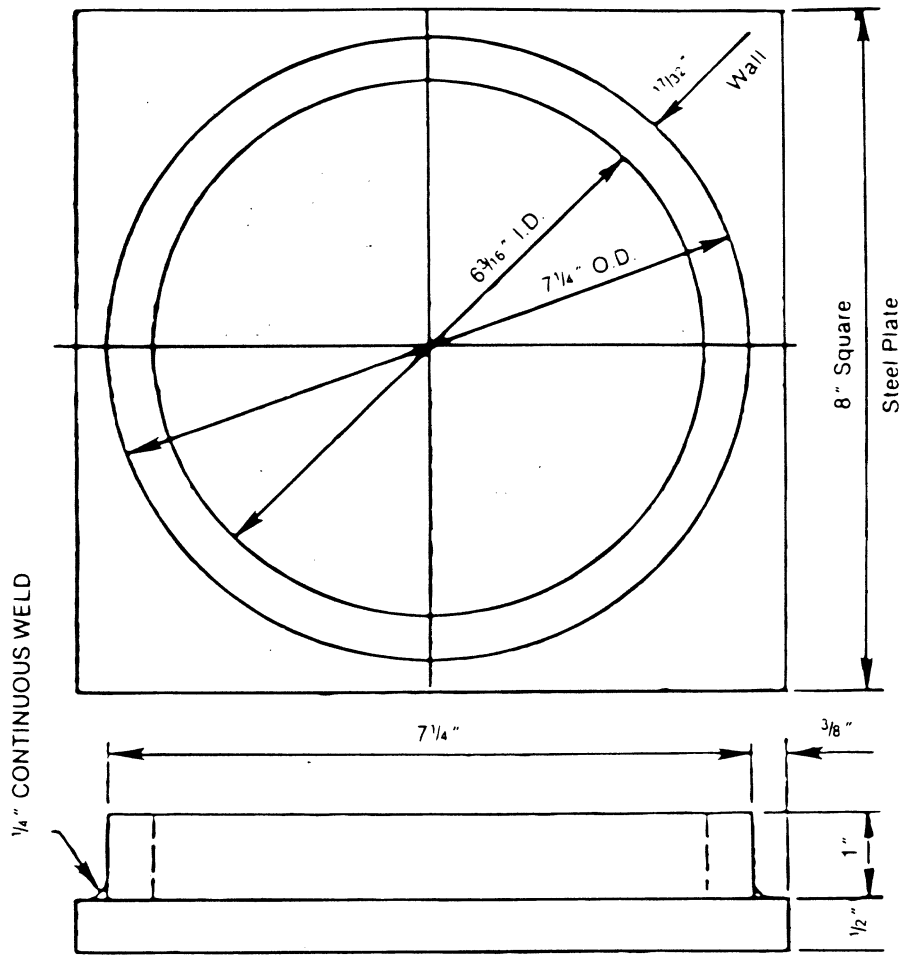

FIGURE A1

NOTE—Metric equivalents for Figure A1 are listed below.

Inches	1/2	1	6	6 1/8	6 3/16	7 1/4	8	12
mm	12.7	25.4	152.4	155.6	157.2	184.2	203.2	304.8

Figure A1

A5. PRECAUTIONS

A5.1 Concrete cylinders tested with neoprene caps rupture more intensely than comparable cylinders tested with sulphur-mortar caps. As a safety precaution, the cylinder testing machine should be equipped with a protective cage.

A5.2 The loading rate for some testing machines may have to be adjusted when using neoprene caps.

A6. TEST SPECIMENS

The test specimens shall be that as detailed in the main test method, modified as follows:

A6.1 Each end of the concrete cylinder shall be plane within 3.2 mm (1/8 in.) across any diameter; i.e., there shall be no depressions in the concrete surfaces which are deeper than 3.2 mm (1/8 in.). Cylinders which do not meet this tolerance shall not be tested unless the surface irregularity is first corrected.

A6.2 Neither end of compressive test specimens when tested shall depart from perpendicularity to the axis by more than 2.0 (approximately equal to a difference in height of 4.8 mm ($^{3}/_{16}$ in.) for 2 152 mm (6-in.) diameter cylinders. Cylinders not meeting this tolerance shall not be tested unless this irregularity is first corrected.

A7. PROCEDURE

The procedure followdshall be that as detailed in the main test method, modified as noted below:

A7.1 Place an extrusion controller, containing a neoprene cap, on the top and bottom surfaces of the concrete cylinder. With the neoprene caps in contact with the concrete cylinder, carefully align the axis of the specimen with the center of thrust of the spherically seated block. Bring the bearing blocks of the machine in contact with both of the extrusion controllers.

A7.2 No loose particles shall be trapped between the concrete cylinder and the neoprene caps or between the bearing surfaces of the extrusion controllers and the bearing blocks of the test machine.

A7.3 The same surface of the neoprene cap shall bear on the concrete cylinder for all tests performed with that cap. Each neoprene cap shall not be used to test more than 100 cylinders. The life of alternate pads must be verified by the agency (or purchaser) in accordance with paragraph A12.4.

A8. CALCULATION

The compressive strength shall be calculated as described in Section 8.1 of the main test method.

A9. REPORT

The report shall contain all the items noted in Section 9 of the main test method.

A10. PRECISION AND ACCURACY

A10.1 Testing variation associated with neoprene caps is o higher and possibly lower than that associated with sulfur-mortar caps. Based on a study, coefficients of variation associated with neoprene caps were within the range (0.0 to 4.0 percent) and considered to represent excellent control.

A10.2 Neoprene caps should be considered as an acceptable substitute for sulfur-mortar caps without correction for apparent strength differences.

A11. ALTERNATE REUSABLE CAP SYSTEMS

A11.1 Commercial systems are available which utilize reusable caps manufactured from materials other than neoprene and extrusion controllers of metals other than steel. An alternate reusable cap system may be used provided the following criteria, manufacturer, and agency (or purchaser) verifications are satisfied.

A12. CHRITERIA FOR ACCEPTANCE OF ALTERNATE REUSABLE CAP SYSTEMS

A12.1 The system must utilize reusable caps retained within extrusion controllers. Tolerances on all bearing surfaces of the extrusion controllers shall meet the requirements of Section A4.1.

A12.2 Reusable caps shall provide a minimum of 12.7 (0.5 in.) compressible thickness over the entire bearing area. The manufacturer shall supply reusable caps which are uniform in dimensions and physical properties.

A12.3 Manufacturer Verification of Alternate Reusable Cap Systems:

A12.3.1 The manufacturer shall provide results of a two-factor factorial experiment with capping method as the main factor and concrete batch as the secondary factor. For the estimation of variances for error, interaction among factors, or for factors, the cap system factor shall be considered a fixed variable and the batch factor shall be considered a random variable. The experiment shall be repeated at three levels of concrete strength at 28 days, representing a range of average strength of 13.8 to 41.4 MPa (2000 to 6000 psi) (13.8 (2000), 27.6 (4000), 41.4 (6000) MPa (psi)) recommended. The F test level of significance for testing significance of difference among variances shall be 0.05.

A12.3.2 In conducting the experiment, a minimum of eight batches of four cylinders per batch shall be prepared at each level of strength, yielding two replicates for each capping method X batch combination. Within each batch, equal numbers of cylinders shall be randomly chosen for testing by the reusable cap system and by T 231. The sequence of testing for capping method X batch X level of strength cells shall be randomized. If laboratory facilities do not permit fabrication of all cylinders within one day, cylinders for one complete strength level shall be fabricated on each of three successive days; sequence of testing for capping method X batch will be randomized. One set of new pads shall be used for all tests within each strength level. At the option of the manufacturer, one set of new pads may be used for all tests at all strength levels; but sequence of testing for capping method X batch X strength level cells shall be randomized.

A12.3.3 Specific statistical equivalencies to be demonstrated by the manufacturer shall be as follows:

A12.3.3.1 The analysis of variance of each strength level shall show no significant effect of capping method.

A12.3.3.2 The estimate of average difference in strength between capping methods utilizing the cell averages for each capping method X batch X level of strength cell shall not be significantly different from zero. The paired t test at a level of significance of 0.10 shall be used.

Note: One reference describing factorial experiments is ìFundamental Concepts in the Design of Experimentsî by Charles R. Hicks, Holt, Rinehart, and Winston.

A12.4 Agency (or Purchaser) Verification of Alternate Reusable Cap Systems:

A12.4.1 Prior to implementation of a reusable cap system, the agency (or purchaser) shall conduct an in-house evaluation comparing compressive strength and variability for sets of field cylinders manufactured from the same samples of concrete; the reusable cp system shall be compared to T 231. The paired t test shall be used at a level of significance of 0.10.

A12.4.2 A minimum of 30 sets of cylinders shall be compared for compressive strength for one evaluation with one set of reusable pads; however, the number of sets may be increased (to determine usable life) if the reusable caps have not developed visible damage such as splitting, gouging, or a permanent compression set I the bearing area in 30 repetitions. The evaluation shall be repeated at least once with a new set of reusable caps. Job control cylinders of two or more per set cast from the same sample bay be used. If cylinders are cast from successive batches in a laboratory, selection of cylinders shall be randomized among batch X capping method.

A12.4.3 The agency (or purchaser) shall reject a reusable cap system if the in-house evaluation shows significant difference in compressive strength or variability as compared to T 231.

A12.4.4 The agency (or purchaser) shall reserve the right to reject a reusable cap system if the number o possible repetitions or life of a set of caps is not acceptable to the agency (or purchaser).

Performance Exam Checklist

Compressive Strength of Cylindrical Concrete Specimens

Participant Name _____ Exam Date _____

1. Is the diameter of the cylinder record to the nearest 0.01 inch by averaging two diameters taken at about mid-height? _____ _____
2. Are two cylinders measured? _____ _____
3. Are lower and upper bearing surface wiped clean? _____ _____
4. Is the axis of the cylinder aligned with center of the spherical block? _____ _____
5. Is the spherical block rotated as it contacts the cylinder? _____ _____
6. Is the load applied continuously and without shock at the specified rate* (20-50 psi/sec)? _____ _____
7. Is no rate adjustment made while the cylinder is yielding? _____ _____
8. Is the maximum load recorded? _____ _____
9. Are cylinders tested to failure and the type of fracture recorded? _____ _____

   Breaking Cylinders (Tolerance) (C39)

   1 day ($^1/_2$ hour) _____
   3 day (2 hours) _____
   7 day (6 hours) _____
   28 day (20 hours) _____

   *34,000 to 85,000 lbf/min for a 6 by 12 cylinder

Comments: First attempt: Pass ☐ Fail ☐ Second attempt: Pass ☐ Fail ☐

_____

_____

_____

_____

_____

_____

_____

_____

_____

_____

Signature of Examiner _____

WSDOT FOP for AASHTO T 23[1]

Making and Curing Concrete Test Specimens in the Field

1. SCOPE

   1.1 This practice covers procedures for making and curing cylinder and prismatic specimens using job concrete that can be consolidated by rodding or vibration as described herein.

   1.2 The concrete used to make the molded specimens shall have the same level of slump, air content, and percentage of course aggregate as concrete being placed in the work, except as modified in Section 5.1.

   1.3 The values stated in English units are to be regarded as the standard. The metric equivalent given in the standard may be approximate.

   1.4 This standard does not purport to address the safety problems associated with its use. It is the responsibility of the user of this standard to establish appropriate safety and health practices and determine the applicability of regulatory limitations prior to use.

2. REFERENCED DOCUMENTS

   2.1 AASHTO Standards

   M 201 Moist Cabinets, Moist Rooms, and Water Storage Tanks Used in the Testing of Hydraulic Cements and Concretes

   M 205 Molds for Forming Concrete Test Cylinders Vertically

   T 119 Slump of Hydraulic Cement Concrete

   T 126 Making and Curing Concrete Test Specimens in the Laboratory

   T 141 Sampling Freshly Mixed Concrete

   T 152 Air Content of Freshly Mixed Concrete by the Pressure Method

   T 196 Air Content of Freshly Mixed Concrete by the Volumetric Method

   T 231 Capping Cylindrical Concrete Specimens

   T 309 Temperature of Freshly Mixed Portland-Cement Concrete

3. SIGNIFICANCE AND USE

   3.1 This practice provides standardized requirements for making, curing, protecting, and transporting concrete test specimens under field conditions.

   ~~3.2 If the specimens are made and standard cured, as stipulated herein, the specimens may be used to develop information for the following purposes:~~

   ~~3.2.1 Checking the adequacy of laboratory mixture proportions for strength.~~

   ~~3.2.2 serves as the basis for comparison with laboratories, field or in-place tests, as the basis for safety and in structure performance evaluation, and as basis for form and shoring removal time requirements.~~

[1]This FOP is based on AASHTO T 23-97.

~~3.2.3 Determination of compliance with strength specifications, and,~~

~~3.2.4 Determination of time when a structure may be put in service.~~

4. APPARATUS

~~4.1 Molds, General — Molds for specimens or fastenings thereto in contact with the concrete shall be made of steel, cast iron, or other nonabsorbent material, non-reactive with concrete containing portland or other hydraulic cements. Molds shall hold their dimensions and shape under all conditions of use. Molds shall be watertight during use as judged by their ability to hold water poured into them. Provisions for tests of water tightness are given in Section 6 of Specification M 205. A suitable sealant, such as heavy grease, modeling clay, or microcrystalline wax shall be used where necessary to prevent leakage through the joints. Positive means shall be provided to hold base plates firmly to the molds. Molds shall be lightly coated with mineral oil or a suitable non-reactive form release material before use.~~

4.2 Cylinder Molds:

4.2.1 Molds for Casting Specimens Vertically — ~~Molds for casting concrete test specimens shall conform to the requirements of M 205.~~ Shall come from an approved shipment as verified by the Quality Systems Manual Verification Procedure No. 2.

4.3 Beam Molds — Beam molds shall be rectangular in shape and of the dimensions required to produce the specimens stipulated in Section 5.2. The inside surfaces of the molds shall be smooth. The sides, bottom, and ends shall be at right angles to each other and shall be straight and true and free of warpage. Maximum variation from the nominal cross section shall not exceed $^{1}/_{8}$ in. [3 mm] for molds with depth or breadth of 6 in. [152 mm] or more. Molds shall produce specimens at least as long but not more than $^{1}/_{16}$ in. [2 mm] shorter than the required length in accordance with Section 5.2, but may exceed it by more than that amount.

4.4 Tamping Rod — Two sizes are specified. Each shall be a round, straight steel rod with at least the tamping end rounded to a hemispherical tip of the same diameter as the rod. Both ends may be rounded if preferred.

4.4.1 Large Rod — $^{5}/_{8}$ in. (16 mm) in diameter and approximately 24 in. [610 mm] long.

4.4.2 Small Rod — $^{3}/_{8}$ in. [10 mm] in diameter and approximately 12 in. [305 mm] long.

4.5 Vibrators — Internal vibrators may have rigid or flexible shafts, preferably powered by electric motors. The frequency of the vibration shall be 7,000 vibrations per minute or greater while in use. The outside diameter or side dimension of the vibrating element shall be at least 0.75 in. (19 mm) and not greater then 1.5 in. (38 mm). The combined length of the shaft and vibrating element shall exceed the maximum depth of the section being vibrated by at least 3 in. [76 mm]. When external vibrators are used, they should be the table or plank type. The frequency of external vibratory shall be at least 3,600 vibrations per minute. For both table and plant vibrators, provisions shall be made for clamping the mold securely to the apparatus. A vibrating reed tachometer should be used to check the frequency of vibration.

4.6 Mallet — A mallet with a rubber or rawhide head weighing 1.25 $\pm$ 0.50 lb [0.57 $\pm$ 0.23 kg] shall be used.

4.7 Small Tools — Tools and items which may be required are shovels, pails, trowels, wood float, metal float, blunted trowels, straightedge, feeler gauge, scoops, and rules.

4.8 Slump Apparatus — The apparatus for measurement of slump shall conform to the requirements of T 119.

4.9 Sampling and Mixing Receptacle — The receptacle shall be a suitable heavy gage metal pan, wheelbarrow, or flat, clean non-absorbent mixing board of sufficient capacity to allow easy remixing of the entire sample with a shovel or trowel.

4.10 Air Content Apparatus — The apparatus for measuring air content shall conform to the requirements of T 196 or T 152.

5. TESTING REQUIREMENTS

5.1 The number of cylinders made will be as follows:

Testing for determining the compressive strength at 28 days shall require a set of two specimens made from the same sample.

Testing for compressive strength at ages less than 28 days, a single cylinder specimen for each test age will be sufficient.

5.2 Cylindrical Specimens — Compressive strength cylindrical specimens shall be cylinders ~~cast~~ of concrete cast and hardened in an upright position, with a length equal to twice the diameter. The standard specimen shall be the 6 by 12-in. [150 by 300-mm] cylinder when the maximum size of the coarse aggregate does not exceed 2 in. [50 mm] (Note 1) ~~)~~. When the ~~nominal~~ maximum size aggregate ~~is 1 inch or less~~ does not exceed 1 in. [25 mm], 4 by 8-in. ~~inch~~ [100 by 200 mm] cylinders may be used. **Mixing of cylinder sizes for a particular class of mix is not permitted on a project.** When the maximum size of the coarse aggregate does exceed 2 in., contact the FOSSC Materials Laboratory for instructions. ~~When the maximum size of the coarse aggregate does exceed 2 in. [50 mm], either the concrete sample shall be treated by wet sieving as described in T 141 or the diameter of the cylinder shall be at least three times the nominal maximum size of coarse aggregate in the concrete. When the nominal maximum size of coarse aggregate 1 in. (25mm) the specimens may be 4 by 8 in. (100 by 200 mm).~~

~~For acceptance testing for specified strength, cylinders smaller than 6 by 12 in. [150 by 300 mm] shall not be used, unless another size is specified (Note 4).~~

Note 1: *The maximum size is the smallest sieve opening through which the entire amount of aggregate is REQUIRED to pass.*

5.3 Flexural Strength Specimens — Flexural strength specimens shall be rectangular beams of concrete cast and hardened with long axes horizontal. The length shall be at least 2 in. [50 mm] greater than three times the depth as tested. The ratio of width to depth as molded shall not exceed 1.5. The standard beam shall be 6 by 6 in. [150 by 150 mm] in cross section, and shall be used for concrete with nominal maximum size coarse aggregate up to 2 in. [50 mm]. When the nominal maximum size of the coarse aggregate exceeds 2 in. [50 mm], the smaller cross sectional dimension of the beam shall be at least three times the nominal maximum size of the coarse aggregate. Unless required by project specifications, beams made in the field shall not have a width or depth of less than 6 in. [150 mm].

6. SAMPLING CONCRETE

6.1 The samples used to fabricate test specimens under this standard shall be obtained in accordance with ~~T 141~~ FOP for WAQTC TM-2 unless an alternative procedure has been approved.

6.2 Record the identification of the sample with respect to the location of the concrete represented and the time of casting.

7. SLUMP, AIR CONTENT, AND TEMPERATURE

7.1 Slump — Measure and record the slump of each batch of concrete from which specimens are made immediately after remixing in the receptacle, as required in T 119.

7.2 Air Content — Determine the air content in accordance with either T 152 or T 196. The concrete used in performing the air content test shall not be used in fabricating test specimens.

7.3 Temperature — Determine and record the temperature in accordance with T 309.

8. MOLDING SPECIMENS

8.1 Place of Molding — Mold specimens promptly on a level, rigid horizontal surface, free of vibration and other disturbances, at a place as near as practicable to the location where they are to be stored.

8.2 Placing the Concrete — Place the concrete in the mold using a scoop, blunted trowel, or shovel. Select each scoopful, trowelful, or shovelful of concrete from the mixing pan to ensure that it is representative of the batch. Remix the concrete in the mixing pan with a shovel or trowel to prevent segregation during the molding of specimens. Move the scoop, trowel, or shovel around the perimeter of the mold opening when adding concrete to ensure even distribution of the concrete and to minimize segregation. Further distribute the concrete by use of the tamping rod prior to the start of consolidation. In placing the final layer, the operator shall attempt to add an amount of concrete that will exactly fill the mold after consolidation. Do not add nonrepresentative concrete to an underfilled mold.

8.2.1 Number of Layers — Make specimens in layers as indicated in Table 1.

8.3 Consolidation:

8.3.1 Method of Consolidation — Preparation of satisfactory specimens require different methods of consolidation. The methods of consolidation are rodding, and internal or external vibration. Base the selection of the method of consolidation on slump, unless the method is stated in the specifications under which the work is being performed. Rod concretes with a slump greater than 3 in. (75 mm). Rod or vibrate concretes with slumps of 1 to 3 in. (25 to 75 mm). Vibrate concretes with slumps less than 1 in. (25 mm). Concretes of such low water content that they cannot be properly consolidated by the method herein, or requiring other sizes and shapes of specimens to represent the product or structure, are not covered by this method. Specimens for such concretes shall be made in accordance with the requirements of Method T 126 with regards to specimen size and shape and method of consolidation.

Table 1
Number of Layers Required for Specimens

Specimen Type and size as Total Depty, in (mm)	Mode of Compaction	Number of Layers or Depth of Layers
Cylinders:		
12 (300) or less	rodding	3 equal layers
Over 12 (300)	rodding	4 in (100 mm) in depth as near as practicable
Over 12 (300) to 18 (460)	vibration	2 equal layers
Over 460 (18)	vibration	8 in (200 mm) depth as near as practicable
Beam:		
150 (6) to 200 (8)	rodding	2 equal layers
Over 8 (200)	rodding	4 in (100 mm) in depth as near as practicable
6 (150) to 8 (200)	vibration	1 full depth layer
Over 8 (200)	vibration	8 in (200 mm) depth as near as practicable

8.3.2 Rodding-Place the concrete in the mold, in the required number of layers of approximately equal volume. For cylinders rod each layer with the rounded end of the rod using the required number of strokes specified in Table 2. The number of roddings per layer required for beams is one for each 2 in^2 (13 cm2) top surface area of the specimen. Rod the bottom layer throughout its depth. Distribute the strokes uniformly over the cross section of the mold and for each upper layer allow the rod to penetrate about 1/2 in. (12 mm) into the underlying layer when the depth of the layer is less than 4 in. (100 mm) and about 1 in. (25 mm) when the depth is 4 in. or more. After each layer is rodded, tap the outsides of the mold lightly 10 to 15 times with the mallet, to close any holes left by rodding and to release any large air bubbles that may have been trapped. Use an open hand to tap light-gage single-use molds which are susceptible to damage if tapped with a mallet. After tapping, spade the concrete along the sides and ends of beam molds with a trowel or other suitable tool.

Table 2
Diameter of Rod and Number of Roddings to be Used in Molding Cylinder Test Specimens

Diameter of Cylinder, in (mm)	Diameter of Rod, in (mm)	Number of Strokes/Layer
4 (100)	3/8 (10)	25
6 (150)	5/8 (16)	25
8 (200)	5/8 (16)	50
10 (250)	5/8 (16)	75

8.3.3 *Vibration* — Maintain a uniform time period for duration of vibration for the particular kind of concrete, vibrator, and specimen mold involved. The duration of vibration required will depend upon the workability of the concrete and the effectiveness of the vibrator. Usually, sufficient vibration has been applied as soon as the surface of the concrete has become relatively smooth. Continue vibration only long enough to achieve proper consolidation of the concrete. Over vibration may cause segregation. Fill the molds and vibrate in the required number of approximately equal layers. Place all the concrete for each layer in the mold before starting vibration of that layer. When placing the final layer, avoid overfilling by more than 1/4 in. (6 mm). Finish the surface either during or after vibration where external vibration is used. Finish the surface after vibration when internal vibration is used. When the finish is applied after vibration, add only enough concrete with a trowel to over fill the mold about 1/8 in. (3 mm). Work it into the surface and then strike it off.

8.3.3.1 *Internal Vibration* – The diameter of the vibrating element, or thickness of a square vibrating element, shall be in accordance with the requirements of Section 4.5. For beams, the vibrating element shall not exceed 1/3 of the width of the mold. For cylinders, the ration of the diameter of the cylinder to the diameter of the vibrating element shall be 4.0 or higher. In compacting the specimen, the vibrator shall not be allowed to rest on the bottom or sides of the mold. Carefully withdraw the vibrator in such a manner that no air pockets are left in the specimen.

8.3.3.2 *Cylinders* — Use three insertions of the vibrator at different points for each layer. Allow the vibration to penetrate through the layer being vibrated, and into the layer below, approximately 1 in. (25 mm). After each layer is vibrated, tap the outsides of the mold lightly 10 to 15 times with the mallet, to close any holes left by vibrating and to release any large air bubbles that may have been trapped. Use an open hand to tap light-gage single-use molds, which are susceptible to damage if tapped with a mallet.

8.3.3.3 *Beam* — Insert the vibrator at intervals not exceeding 6 in. [150 mm] along the centerline of the long dimension of the specimen. For specimens wider than 6 in., use alternating insertions along two lines. Allow the shaft of the vibrator to penetrate into the bottom layer approximately 1 in. (25 mm). After each layer is vibrated, tap the outsides of the mold lightly 10 to 15 times with the mallet to close any holes left by vibrating and to release any large air bubbles that may have been trapped.

8.3.4 *External Vibration* — When external vibration is used, take care to ensure that the mold is rigidly attached to or securely held against the vibrating element or vibrating surface.

8.4 *Finishing* — After consolidation, unless the finishing has been performed during the vibration (Section 8.3.3), strike off the surface of the concrete and float or trowel it as required. Perform all finishing with the minimum manipulation necessary to produce a flat even surface that is level with the rim or edge of the mold and that has no depressions or projections larger than 1/8 in. (3.2 mm).

8.4.1 Cylinders — After consolidation, finish the top surfaces by striking them off with the tamping rod where the consistency of the concrete permits or with a wood float or trowel. If desired, cap the top surface of freshly made cylinders with a thin layer of stiff Portland cement paste which is permitted to harden and cure with the specimen. See section on Capping Materials of T 231.

8.4.2 Beams — After consolidation of the concrete, strike off the top surface to the required tolerance to produce a flat even surface. A wood float may be used.

8.5 Initial Storage — Immediately after being struck off, the specimens shall be move to the storage place were they will remain undisturbed for the initial curing period. If specimens made in single use mold are move, lift and support the specimens from the bottom of the molds with a large trowel or similar device.

9. CURING

9.1 *Covering After Finishing* — Immediately after finishing, precautions shall be taken to prevent evaporation and loss of water from the specimens. Protect the outside surfaces of cardboard molds from contact with wet burlap or other sources of water. Cardboard molds may expand and damage specimens at an early age if the outside of the mold absorbs water. Cover specimens with a nonabsorbent, non-reactive plate or sheet of impervious plastic. When wetted burlap is used over the plate or plastic sheet to help retard evaporation, but the burlap must not be in contact with the surface of the concrete.

9.2 *Curing Specimens for Checking the Adequacy of Laboratory Mixture Proportions for Strength or as the Basis for Acceptance or Quality Control.*

9.2.1 *Initial Curing* — After molding, the specimens ~~shall~~ should be stored in a temperature range between 60 to 80°F [16 to 27°C~~] and in a moist environment preventing moisture loss up to 48 hrs (Note 2). At all times the temperature in and between specimens shall be controlled by shielding from direct rays of the sun and radiant heating devices.~~ Specimens that are to be transported to the laboratory for standard curing (see Section 9.2.2) before 48 hours shall remain in the molds in a moist environment, until they are received in the laboratory, demolded and placed in standard curing. If specimens are not transported within 48 hours the mold shall be removed within 24 ± 8 hours and standard curing used until transported. (See Section 10.1)

~~***Note 2:*** It may be necessary to create an environment during the initial curing to provide satisfactory moisture and to control the temperature. The specimens may be immediately immersed in water saturated with limewater, and/or stored in tightly constructed wooden boxes, damp sand pits, temporary buildings at construction sites, under wet burlap or in heavyweight closed plastic bags.. Immersing in saturated limewater is not acceptable for specimens in cardboard or other molds that expand when immersed in water. Other suitable methods may be used provided the foregoing requirements limiting specimen temperature and moisture loss are met. The temperature may be controlled by ventilation, thermostatically controlled thermal devices, or by heating devices such as stoves, light bulbs, or thermostatically controlled heating elements. Temperature record of the specimens may be established by means of maximum-minimum thermometers. Early age results may be lower when stored near 60°F [16°C] and higher when stored near 80°F [27°C].~~

9.2.2 *Standard Curing*:

9.2.3.1 *Cylinders* — Upon completion of initial curing and within 30 min after removing the molds, store specimens in a moist condition with free water maintained on their surfaces at all times at a temperature of 73 ± 3°F [23 ± 2°C]. Temperatures between 68 and 86°F [20 and 30°C] are permitted for a period not to exceed 3 hours immediately prior to test if free moisture is maintained on the surfaces of the specimen at all times, except when capping with sulfur mortar capping compound. When capping with this material, the ends of the cylinder will be dried as described in T 231. Specimens shall not be exposed to dripping or running water. The required moist storage can be obtained by immersion in saturated limewater and may be obtained by storage in a moist room or cabinet meeting the requirements of M 201.

9.2.3.2 *Beams* — Beams are to be cured the same as cylinders (see 9.2.2.1) except for 20 hours prior to testing, they shall be stored in water saturated limewater at 73.4°± 3° F [23 ± 1.7°C]. Drying of the surfaces of the beam shall be prevented between removal from limewater and completion of testing (Note 3).

Note 3: Relatively small amounts of drying of surface of flexural specimens induces tensile stresses in the extreme fibers that will markedly reduce the indicated flexural strength.

9.3 *Curing Specimens for Checking the Adequacy of Laboratory Mixture Proportions for Strength or as the Basis for Acceptance of Quality Control at Remote Sites:*

9.3.1 Specimens prepared and stored at remote sites which do not have facilities for controlling temperature within the tolerance of 73.4°± 3° F [23 ± 1.7°C] shall be cured in accordance with the provisions of Section 9.2 except as modified by Section 9.3.

9.3.2 *Initial Curing at Remote Sites* — Specimens shall be cured in accordance with Section 9.2.1.

9.3.2.1 Specimens not to be transported or to be transported after 48 hours age may be cured without demolding provided that loss of moisture is prevented in accordance with Section 9.2.1 until the time of transportation or testing.

9.3.3 *Standard Curing at Remote Sites* — Specimens stored at a remote site and shipped to a laboratory for test or to be tested at the remote site shall be cured in accordance with Sections 9.3.1, 9.3.2, and 9.3.2.1 until the time of shipment or test. Specimens shall not be exposed to dripping or running water.

9.3.3.1 Beam specimens to be stored and tested at remote sites shall be cured in accordance with Section 9.3, except that for a minimum of 20 hours prior to testing, they shall be stored in saturated limewater at 60 to 80°F [16 to 27°C].

Drying of the surfaces of the beam shall be prevented between removal from the limewater and completion of testing (Note 4).

Note 4: Curing of specimens at remote sites in accordance with Section 9.3 may yield significantly different results as compared to specimens cured in accordance with Section 9.2.

9.4 *Curing for Determining Form Removal Time or When a Structure May be Put into Service:*

9.4.1 *Cylinders* — Store cylinders in or on the structure as near to the point of deposit of the concrete represented as possible. Protect all surfaces of the cylinders from the elements in as near as possible the same way as the formed work. Provide the cylinders with the same temperature and moisture environment as the structural work. Test the specimens in the moisture condition resulting from the specified curing treatment. To meet these conditions, specimens made for the purpose of determining when a structure may be put in service shall be removed from the molds at the time of removal of form work.

9.4.2 *Beams* — As nearly as practicable, cure beams in the same manner as the concrete in the structure. At the end of 48 ± 4 hours after molding, take the molded specimens to the storage location and remove from the molds. Store specimens representing pavements or slabs on grade by placing them on the ground as molded, with their top surfaces up. Bank the sides and ends of the specimens with earth or sand that shall be kept damp, leaving the top surfaces exposed to the specified curing treatment. Store specimens representing structure concrete as near to the point in the structure they represent as possible and afford them the same temperature protection and moisture environment as the structure. At the end of the curing period leave the specimens in place exposed to the weather in the same manner as the structure. Remove all beam specimens from field storage and store in limewater at 73.4°± 5° F [23 ± 2.8°C] for 24 ± 4 hours immediately before time of testing to ensure uniform moisture condition from specimen to specimen. Observe the precautions given in Section 9.2.2.2 of removal from curing to testing.

10. TRANSPORTATION OF SPECIMENS TO LABORATORY

10.1 Prior to transporting, specimens shall be cured and protected as required in Section 9. Specimens shall not be transported until at least 8 hours after final set. (See Note 8). During transporting, the specimens must be protected with suitable cushioning material to prevent damage from jarring and freezing temperatures or moisture loss. Moisture loss may be prevented by wrapping the specimens in plastic, or surrounding them with wet sand or wet sawdust.

Performance Exam Checklist

Making and Curing Concrete Test Specimens in the Field
FOP for AASHTO T 23

Participant Name _____ Exam Date _____

Procedure Element	Yes	No
1. Molds placed on a level, rigid, horizontal surface free of vibration?	_____	_____
2. Representative sample selected?	_____	_____
3. Making of specimens begun within 15 minutes of sampling?	_____	_____
4. Concrete placed in the mold, moving a scoop or trowel around the perimeter of the mold to evenly distribute the concrete as discharged?	_____	_____
5. Mold filled in three equal layers, attempting to exactly fill the mold on the last layer?	_____	_____
6. Each layer rodded throughout its depth 25 times with hemispherical end of rod, uniformly distributing strokes?	_____	_____
7. Bottom layer rodded throughout its depth?	_____	_____
8. Middle and top layers rodded, each throughout their depths, and penetrating 25 mm into the underlying layer?	_____	_____
9. Sides of the mold tapped 10-15 times after rodding each layer?		
a. with mallet for reusable steel molds	_____	_____
b. with the open hand for flexible light-gauge molds	_____	_____

Procedure Element	Yes	No
10. Concrete struck off with tamping rod or, if necessary, finished with a trowel or float, using a minimum of manipulation?	_____	_____
11. Specimens covered with nonabsorptive, nonreactive cap or plate?	_____	_____

Comments: First attempt: Pass ☐ Fail ☐ Second attempt: Pass ☐ Fail ☐

_____

_____

_____

_____

_____

_____

_____

_____

_____

_____

Signature of Examiner _____

This checklist is derived, in part, from copyrighted material printed in ACI CP-1, published by the American Concrete Institute.

SIEVE ANALYSIS OF FINE AND COARSE AGGREGATES
FOP FOR AASHTO T 27

MATERIALS FINER THAN No. 200 (.075 mm) SIEVE IN MINERAL AGGREGATE BY WASHING
FOP FOR AASHTO T 11

01 ## Significance

Sieve analyses are performed on aggregates used
02 in roadway bases and in portland cement and asphalt cement concretes. Sieve analyses reveal
03 the size makeup of aggregate particles – from the largest to the smallest. A gradation curve or chart showing how evenly or unevenly the sizes are distributed between largest and smallest is created in this test. How an aggregate is graded has a major impact on the strength of the base or on the properties and performance of concrete. In
04 portland cement concrete (PCC), for example, gradation influences shrinkage and shrinkage cracking, pumpability, finishability, permeability, and other characteristics.

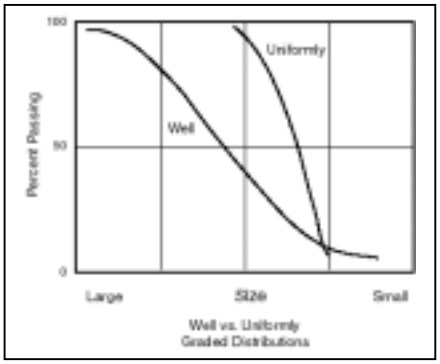

Gradation curves

~~Generally, well-graded material having an even distribution of particle sizes will have better load handling properties than poorly graded material consisting of a few size classes. Although other characteristics of aggregates contribute to its strength, the better a material is graded, the less material will be needed.~~

05 ## Scope

This procedure covers sieve analysis in accordance with AASHTO T 27 and materials finer than No. 200 in accordance with AASHTO T 11. The procedure combines the two test methods.

Sieve analyses determine the gradation or distribution of aggregate particles within a given sample in order to determine compliance with design and production standards.

Washing sample

06 Accurate determination of material smaller than No. 200 (.075 mm) cannot be made with AASHTO T 27 alone. If quantifying this material is required, it is recommended that AASHTO T 27 be used in conjunction with AASHTO T 11. Following AASHTO T 11, the sample is washed through a No. 200 (.075 mm) sieve. The amount of material passing this sieve is determined by comparing dry sample masses before and after the washing process. The procedure herein is a combination of the two methods.

07

Apparatus

08 **Apparatus**

- Balance or scale: Capacity sufficient for the masses shown in Table 1, accurate to 0.1 percent of the sample mass or ~~readable to 0.1 g. Meeting~~ better and conform to the requirements of AASHTO M 231.
- Sieves – Meeting the requirements of AASHTO M 92.
- Mechanical sieve shaker – Meeting the requirements of AASHTO T 27.
- Suitable drying equipment (see FOP for AASHTO T 255)
- Containers and utensils: A pan or vessel of a size sufficient to contain the sample covered with water and to permit vigorous agitation without loss of any part of the sample or water

Large sieve shaker

09

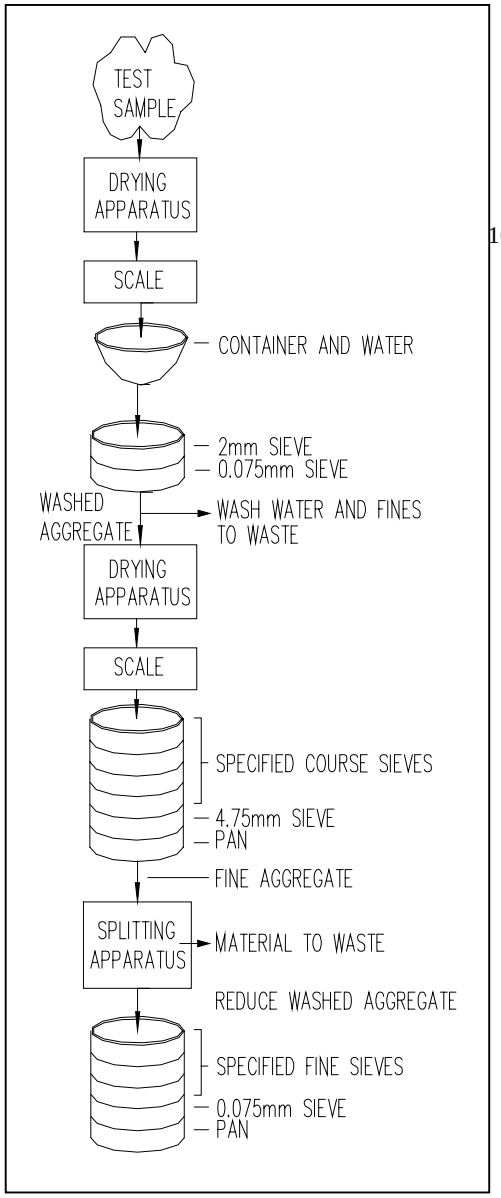

Sample Preparation

Obtain samples in accordance with the FOP for AASHTO T 2 and reduce to the size shown in Table 1 in accordance with the FOP for AASHTO T 248.

10

~~**TABLE 1**~~
~~**Sample Sizes for Aggregate Gradation Test**~~

~~Nominal Maximum Size* mm (in.)~~	~~Minimum Mass kg (lb)~~
~~4.75 (No. 4)~~	~~0.5 (1)~~
~~6.3 (1/4)~~	~~1 (2)~~
~~9.5 (3/8)~~	~~1 (2)~~
~~12.5 (1/2)~~	~~2 (4)~~
~~19.0 (3/4)~~	~~5 (11)~~
~~25.0 (1)~~	~~10 (22)~~
~~37.5 (1 1/2)~~	~~15 (33)~~
~~50 (2)~~	~~20 (44)~~
~~63 (2 1/2)~~	~~35 (77)~~
~~75 (3)~~	~~60 (130)~~
~~90 (3 1/2)~~	~~100 (220)~~

~~* One sieve larger than the first sieve to retain more than 10 percent of the material, using specification sieves. See definition on page 18.~~

WSDOT added:

Table 1
Sample Sizes for Aggregate Gradation Test

Nominal Maximum Size* in. (mm)	**Minimum Mass lb (kg)**
No. 4 (4.75)	1 (0.5)
1/4 (6.3)	2 (1)
3/8 (9.5)	2 (1)
1/2 (12.5)	5 (2)
5/8 (16.0)	5 (2)
3/4 (19.0)	7 (3)
1 (25.0)	13 (6)
1 1/4 (31.5)	17 (7.5)
1 1/2 (37.5)	20 (9)
2 (50)	22 (10)
3 1/2 (90)	27 (12)
3 (75)	33 (15)
2 1/2 (63)	44 (20)

For aggregate, the nominal maximum size of particles is the largest sieve size listed in the applicable specification, upon which any material is permitted to be retained.

Note: For an aggregate specification having a generally unrestrictive gradation (i. e. wide range of permissible upper sizes), where the source consistently fully passes a screen substantially smaller than the maximum specified size, the nominal maximum size, for the purpose of defining sampling and test specimen size requirements may be adjusted to the screen, found by experience to retain no more than 5% of the materials.

11

Note 1: These sample sizes are standard for aggregate testing but, due to equipment restraints, samples may need to be partitioned into several "subsamples." For example, a gradation that requires 100 kg of material would not fit into a large tray shaker in one batch.

Note 2: Some agencies permit reduced sample sizes if it is proven that doing so is not detrimental to the test results. Some agencies require larger sample sizes. Check agency guidelines for required or permitted test sample sizes.

Washed sieve analysis

Procedure

12

Sieves

1. Dry the sample ~~to a constant mass~~ in accordance with the FOP for AASHTO T 255, and record to the nearest 0.1 ~~g~~ <u>percent of total mass</u>.

   Note 3: AASHTO T 27 allows for coarse aggregate to be run in a moist condition unless the nominal maximum size of the aggregate is smaller than 1/2 in. (12.5 mm), the coarse aggregate (CA) contains appreciable material finer than No. 4 (4.75 mm), or the coarse aggregate is highly absorptive. ~~AASHTO also allows for sample drying on a hot plate so long as the particles do not fracture and the aggregate does not change chemically under the heat.~~

2. When the specification requires that the amount of material finer than No. 200 (.075 mm) be determined, do Step 3 through Step 9 – otherwise, skip to Step 10.

   Note 4: If the applicable specification requires that the amount passing the No. 200 (.075 mm) sieve be determined on a portion of the sample passing a sieve smaller than the nominal maximum size of the aggregate, separate the sample on the designated sieve and determine the mass of the material passing that

sieve to 0.1 percent of the mass of this portion of the test sample. Use the mass as the original dry mass of the test sample.

13 3. Nest a sieve, such as a No. 10 (2 mm), above the No. 200 (.075 mm) sieve.

4. Place the test sample in a container and add sufficient water to cover it.

Note 5: A detergent, dispensing agent, or other wetting solution may be added to the water to assure a thorough separation of the material finer than the U.S. No. 200 (.075 mm) sieve from the coarser particles. There should be enough wetting agent to produce a small amount of suds when the sample is agitated. Excessive suds may overflow the sieves and carry material away with them.

14 5. Agitate vigorously to ensure complete separation of the material finer than No. 200 (.075 mm) from coarser particles and bring the fine material into suspension above the coarser material.

Separation of material

15 ***Note:*** The use of a mechanical aggregate washer is permitted in the accomplishment of step 4, through 9. Caution must be exercised that prolonged agitation does not cause degradation of the aggregate.

6. Immediately pour the wash water containing the suspended and dissolved solids over the nested sieves, being careful not to pour out the coarser particles.

Flushing

16 7. Add a second change of water to the sample remaining in the container, agitate, and repeat Step 6. Repeat the operation until the wash water is reasonably clear.

17 8. Return all material retained on the nested sieves to the container by flushing into the washed sample.

9. Dry the washed aggregate ~~to constant mass~~ in accordance with the FOP for AASHTO T 255, and then cool prior to sieving. ~~AASHTO also allows for sample drying on a hot plate so long as the particles do not fracture and the aggregate does not change chemically under the heat.~~ Record the dry, ~~constant mass if required by the agency~~ mass.

18 10. Select sieves to furnish information required by the specifications. Nest the sieves in order of decreasing size from top to bottom and place the sample, or a portion of the sample, on the top sieve.

Note 6: Additional sieves may be necessary to provide other information, such as fineness modulus, or to keep from overloading the specified sieves. The sample may also be sieved in increments.

19 11. Place sieves in mechanical shaker and shake for a minimum of 10 minutes, or the minimum time determined to provide complete separation for the sieve shaker being used.

~~***Note 7:*** The 10-minute requirement should be evaluated for each shaker at least annually.~~

20 ~~***Note 8:*** Continue shaking for a sufficient period and in such a manner that, after completion, not more than 0.5 percent by mass of the total sample passes any sieve during one minute of continuous hand sieving. Provide a snug-fitting pan and cover, and hold in a slightly inclined position in one hand. Strike the side of the sieve sharply and with an upward motion against the heel of the other hand at the rate of about 150 times per minute, turning the sieve about one sixth of a revolution at intervals of about 25 strokes. In determining sufficiency of sieving for sizes larger than 4.75 mm (No. 4), limit the material on the sieve to a single layer of particles.~~

Small sieve shaker

21 For sieves with openings smaller than No. 4 (4.75 mm), the mass retained on any sieve shall not exceed 7 kg/m^2 of sieving surface. For sieves with openings larger than No. 4 (4.75 mm), the mass, in kg/m^2 of sieving surface, shall not exceed the product of 2.5 x (sieve opening in mm). See Table 2.

22

Hand shaking

Mass determination

23

24

Brushing sieve

In the case of CA and fine aggregate (FA) mixtures, the portion of the sample finer than No. 4 (4.75 mm) may be distributed among two or more sets of sieves to prevent overloading of individual sieves. Alternatively, the portion finer than No. 4 (4.75 mm) may be reduced in size using a mechanical splitter in accordance with FOP for AASHTO T 248. If this procedure is followed, compute the mass of the size increment of the original sample as follows:

$$A = \frac{M_1}{M_2} \times B$$

where:

A = mass of the size increment on total sample basis

M_1 = mass of fraction finer than No. 4 (4.75 mm) sieve in total sample

M_2 = mass of reduced portion of material finer than No. 4 (4.75 mm) sieve actually sieved

B = mass of the size increment in the reduced portion sieved.

12. Determine the mass retained on each sieve to the nearest 0.1 ~~g. Ensure that all material trapped in the openings of the sieve are cleaned out and included in the mass retained.~~ percent of the total mass.

    ~~***Note 9:*** Use coarse wire brushes to clean the 600 µm (No. 30) and larger sieves, and soft hair brushes for smaller sieves.~~

13. The total mass of material after sieving should check closely with the original mass. If the masses differ by more than 0.3 percent, based on the original dry sample mass, do not use the results for acceptance purposes. Also, washed samples will not match with original sample due to the washing out of the fines.

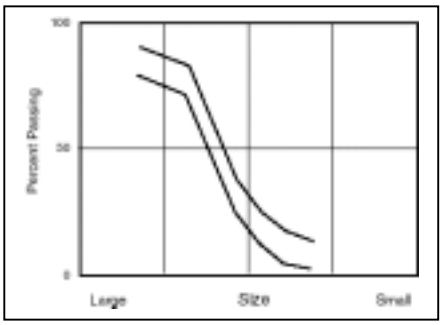

Specifications envelope

14. Divide the masses, or the corrected masses, on the individual sieves by the total mass of the initial dry sample (prior to washing) to determine the percent retained on and passing each sieve. Calculate the percent retained on and passing each sieve. Report percent passing as indicated in the "Report" section at the end of this FOP.

TABLE 2
Maximum Allowable Mass of Material Retained on a Sieve, kg
Nominal Sieve Size, in. (mm)

Sieve Size in. (mm)		203 ϕ (8)	305 ϕ (12)	305 x 305 (12 x 12)	298 x 584 (11 1/2 x 23)	454 x 610 (18 x 24)
				Sieving Area m^2		
		0.028502	0.067012	0.092903	0.174354	0.276940
3 ½	(90)	6.41	15.08	20.90	39.23	62.71
3	(75)	5.34	12.56	17.42	32.69	52.26
2 ½	(63)	4.49	10.55	14.63	27.46	43.90
2	(50)	3.56	8.38	11.61	21.79	34.84
1 ¾	(45)	3.21	7.54	10.45	19.61	31.35
1 ½	(37.5)	2.67	6.28	8.71	16.35	26.13
1 ¼	(31.5)	2.24	5.28	7.32	13.73	21.95
1	(25.0)	1.78	4.19	5.81	10.90	17.42
7/8	(22.4)	1.60	3.75	5.20	9.76	15.61
¾	(19.0)	1.35	3.18	4.41	8.28	13.24
5/8	(16.0)	1.14	2.68	3.72	6.97	11.15
9/16	(14.3)	0.94	2.21	3.07	5.75	9.20
½	(12.5)	0.89	2.09	2.90	5.45	8.71
3/8	(9.5)	0.68	1.59	2.21	4.14	6.62
5/16	(8.0)	0.57	1.34	1.86	3.49	5.57
¼	(6.3)	0.45	1.06	1.46	2.75	4.39
No. 4	(4.75)	0.34	0.80	1.10	2.07	3.31
Less than	No. 4	0.20	0.47	.65	1.22	1.32

Calculation

- Sample Calculation for Percent Retained On and Passing

  Calculate percent retained on and passing each sieve on the basis of the total mass of the initial dry sample. This will include any material finer than No. 200 (.075 mm) that was washed out.

Example: 27

Dry mass of total sample, before washing: 3322.0 g

Dry mass of sample, after washing out the No. 200 (.075 mm) minus: 2947.0 g

Amount of No. 200 (.075 mm) minus washed out: 3322.0 g – 2947.0 g = 375.0 g

Gradation on All Screens 28

Sieve Size in. (mm)	Mass Retained g	Percent Retained	Cumulative Mass Retained g	Cumulative Percent Retained	Percent Passing*
5/8 (16.0)	0	0	0	0	100
1/2 (12.5)	158.1	4.8	158.1	4.8	95
3/8 (9.50)	477.5	14.4	635.6	19.1	80
No. 4 (4.75)	436.5	13.1	1072.1	32.3	67
No. 10 (2.00)	781.0	23.5	1853.1	55.8	44
No. 40 (0.425)	699.5	21.1	2552.6	76.8	23
No. 80 (0.210)	200.2	6.0	2752.8	82.9	17
No. 200 (0.075)	169.9	5.1	2922.7	88.0	12.0
Pan	24.3		2947.0		

* Report 0.075 mm sieve to 0.1 percent. Report all others to 1 percent. 29,30

- Sample Calculation for Percent Retained On and Passing, Including a Split on the No. 4 (4.75 mm) Sieve 31

  Calculate percent retained on and passing each sieve on the basis of the total mass of the initial dry sample. This will include any material finer than No. 200 (.075 mm) that was washed out.

  When material passing the No. 4 (4.75 mm) sieve is split and only a portion of that is tested, the proportionate share of the amount passing the No. 200 (.075 mm) sieve must be added to the sample mass to obtain a corrected test mass. This corrected test mass is used to calculate the gradation of the material passing the No. 4 (4.75 mm) sieve.

  Example showing calculations when the No. 4 (4.75 mm) minus material is split:

  Dry mass of total sample, before washing: 3214 g

  Dry mass of sample, after washing out the No. 200 (.075 mm) minus: 3085 g

  Amount of No. 200 (.075 mm) minus washed out: 3214 g – 3085 g = 129 g (= C, as in calculations on page 75)

Gradation on Coarse Screens 32

Sieve Size mm (in.)	Mass Retained g	Percent Retained	Cumulative Mass Retained g	Cumulative Percent Retained	Percent Passing*
5/8 (16.0)	0	0	0	0	100
1/2 (12.5)	161	5.0	161	5.0	95
3/8 (9.50)	481	15.0	642	20.0	80
No. 4 (4.75)	475	14.8	1117	34.8	65
Pan	1968		3085		

* Report 0.075 mm sieve to 0.1 percent. Report all others to 1 percent.

The actual mass of material passing the No. 4 (4.75 mm) sieve and retained in the pan is 3085 g – 1117 g = 1968 g. This is $\mathbf{M_1}$. 33

Note 10: The pan mass determined in the laboratory and the calculated M_1 should be the same.

These 1968 g were reduced in accordance with the FOP for AASHTO T 248, so that at least 500 g are available. In this case, the mass determined was 512.8 g. This is $\mathbf{M_2}$. 34

Gradation on Fine Screens 35

Sieve Size in. (mm)	Mass Retained (g)	Percent Retained	Cumulative Mass Retained (g)	Cumulative Percent Retained	Percent Passing*
No. 4 (4.75)	0	0	0	0	100
No. 10 (2.00)	205.9	37.7	205.9	37.7	62
No. 40 (0.425)	188.4	34.5	394.3	72.2	27
No. 80 (0.210)	60.2	11.0	454.5	83.2	16
No. 200 (0.075)	49.1	9.0	503.6	92.2	7.8
Pan	9.2		512.8**		

* Report 0.075 mm sieve to 0.1 percent. Report all others to 1 percent.
** This cumulative mass retained and M_2 should be the same.

The mass retained in the pan must be corrected to include the proper percent of No. 200 (.075 mm) minus material washed out.

Corrected cumulative pan mass = $M_2 + \frac{(M_2)(C)}{M_1} = 512.8\text{ g} + \frac{(512.8\text{ g})(129\text{ g})}{1{,}968\text{ g}} = 546.4\text{ g}$ 36

where:

M2 = cumulative mass retained in the pan from the split of the No. 4 (4.75 mm) minus.

M1 = mass of the No. 4 (4.75 mm) minus of entire sample, not including No. 200 (.075 mm) minus washed out.

C = mass of No. 200 (.075 mm) minus washed out.

This corrected cumulative pan mass is the mass used to calculate the percent retained for the fine grading, as shown above.

In order to account for the fact that only a portion of the minus No. 4 (4.75 mm) material was sieved, the mass of material retained on the smaller sieves is adjusted by a factor equal to M_1/M_2. In this example, 37

$$\frac{M_1}{M_2} = \frac{1{,}968\text{ g}}{512.8\text{ g}} = 3.838$$

and each “mass retained” on the fine sieves must be multiplied by this factor.

For example, the overall mass retained on the No. 10 (2.00 mm) sieve is:

$205.9\text{ g} \times \frac{1{,}968\text{ g}}{512.8\text{ g}} = 790.2\text{ g}$ as shown in the following table

Final Gradation on All Screens 38

Sieve Size in. (mm)	Adjusted Mass Retained g	Adjusted Cumulative Mass Retained g	Cumulative Percent Retained	Percent Passing*
5/8 (16.0)	0	0	0.0	100
1/2 (12.5)	161	161	5.0	95
3/8 (9.5)	481	642	20.0	80
No. 4 (4.75)	475	1117	34.8	65
No. 10 (2.0)	205.9 x 3.838=790.2	1907.2	59.3	40
No. 40 (0.425)	188.4 x 3.838=723.1	2630.3	81.8	18
No. 80 (0.210)	60.2 x 3.838=231.0	2861.3	89.0	11
No. 200 (0.075)	49.1 x 3.838=188.4	3049.7	94.9	5.1
Pan	9.2 x 3.838=35.3	3085.0**		

* Report 0.075 mm sieve to 0.1 percent. Report all others to 1 percent.
** The adjusted cumulative mass retained plus the No. 200 (.075 mm) material washed out should be within 0.3 percent of original dry mass of the total sample. (See AASHTO T 27, paragraph 7.7.)

As an alternate method to account for the fact that only a portion of the minus No. 4 (4.75 mm) material was sieved, multiply the fine screen "Percent Passing" values by the percent passing the No. 4 (4.75 mm) sieve obtained in the coarse screen procedure – 65.2 percent in this case.

Final Gradation on All Screens 39

Sieve Size in. (mm)	Adjustment	Percent Passing*
5/8 (16.0)		100
1/2 (12.5)		95
3/8 (9.5)		80
No. 4 (4.75)	100 x .652 =	65
No. 10 (2.0)	62.3 x .652 =	40
No. 40 (0.425)	27.8 x .652 =	18
No. 80 (0.210)	16.8 x .652 =	11
No. 200 (0.075)	7.8 x .652 =	5.1

* Report 0.075 mm sieve to 0.1 percent. Report all others to 1 percent.

- Sample Calculation for Fineness Modulus 40

  Fineness Modulus (FM) is used in determining the degree of uniformity of aggregate gradation in PCC mix designs. It is an empirical number relating to the fineness of the aggregate. The higher the FM, the coarser the aggregate. Values of 2.40 to 3.00 are common for FA in PCC.

The sum of the percentages retained on specified sieves 150, 75, 37.5, 19.0, 9.5, 4.75, 2.36, 1.18, 0.60, 0.30, and 0.15 mm divided by 100 gives the FM.

41

	Example A				Example B		
	Percent				Percent		
		Retained				Retained	
Sieve Size (mm)	**Passing**		**On Spec'd Sieves***		**Passing**		**On Spec'd Sieves***
75*	100	0	0		100	0	0
63	100	0	--		100	0	--
50	100	0	--		100	0	--
37.5*	100	0	0		100	0	0
25.0	53	47	--		100	0	--
19.0*	15	85	85		100	0	0
12.5	0	100	--		100	0	--
9.5*	0	100	100		100	0	0
6.3	0	100	--		100	0	--
4.75*	0	100	100		100	0	0
2.36*	0	100	100		87	13	13
1.18*	0	100	100		69	31	31
0.60*	0	100	100		44	56	56
0.30*	0	100	100		18	82	82
0.15*	0	100	100		4	96	96
			$\sum = 785$				$\sum = 278$
			FM = 7.85				FM = 2.78

* In decreasing size order, each sieve is one-half the size of the preceding sieve.

42

Report

Results shall be reported on standard forms approved for use by the agency. Depending on the agency, this may include:

- Mass retained on each sieve
- Percent retained on each sieve
- Cumulative mass retained on each sieve

- Cumulative percent retained on each sieve
- Percent passing each sieve to the nearest 1 percent except for the percent passing the No. 200 (.075 µm) sieve, which shall be reported to the nearest 0.1 percent
- FM to the nearest 0.01 percent
- Report results using WSDOT Form 422-020.

Tips! 43

- Check specification to see if material must be washed and split.
- Do not lose any material when running the test.
- Remember to base calculations on the total mass of the initial dry sample.
- Check calculations, and sieves for damage or plugging, if results look "odd" or if the material suddenly goes out of spec.
- Save all material for rerunning.

44

Performance Exam Checklist

Sieve Analysis of Fine and Coarse Aggregates FOP for AASHTO T 27

Materials Finer Than 75 µm (No. 200) Sieve in Mineral Aggregate by Washing FOP for AASHTO T 11

Participant Name _____ Exam Date _____

Procedure Element	Yes	No
1. Minimum sample mass meets requirement of Table 1?	_____	_____
2. Test sample dried to a constant mass by FOP for AASHTO T 255?	_____	_____
3. Test sample cooled and mass determined to nearest 0.1 percent of mass?	_____	_____
4. Sample placed in container and covered with water? (If specification requires that the amount of material finer than the No. 200 sieve is to be determined.)	_____	_____
5. Contents of the container vigorously agitated?	_____	_____
6. Complete separation of coarse and fine particles achieved?	_____	_____
7. Wash water poured through nested sieves such as No. 10 and No. 200?	_____	_____
8. Operation continued until wash water is clear?	_____	_____
9. Material retained on sieves returned to washed sample?	_____	_____
10. Washed aggregate dried to a constant mass by FOP for AASHTO T 255?	_____	_____
11. Washed aggregate cooled and mass determined to nearest 0.1 percent of mass?	_____	_____
12. Sample placed in nest of sieves specified? (Additional sieves may be used to prevent overloading as allowed in FOP.)	_____	_____
13. Material sieved in verified mechanical shaker for minimum of 10 minutes?	_____	_____
14. Mass of residue on each sieve determined to 0.1 percent of mass?	_____	_____

Procedure Element	Yes	No
15. Total mass of material after sieving agrees with mass before sieving to within 0.3 percent?	_____	_____
16. Percentages calculated to the nearest 0.1 percent and reported to the nearest whole number, except No. 200 - reported to the nearest 0.1 percent?	_____	_____
17. Percentage calculations based on original dry sample mass?	_____	_____
18. Calculations performed properly? If material passing No. 4 sieve is split and only a portion is tested, calculation as noted in FOP performed properly?	_____	_____

Comments: First attempt: Pass ☐ Fail ☐ Second attempt: Pass ☐ Fail ☐

_____

_____

_____

_____

_____

_____

_____

_____

_____

_____

Signature of Examiner _____

WSDOT FOP for AASHTO T 30[1]

Mechanical Size Analysis of Extracted Aggregate

1. SCOPE

   1.1 This test method covers a procedure for determination of the particle size distribution of fine and coarse aggregates extracted from bituminous mixtures using sieves with square openings.

   1.2 The values stated in English units are to be regarded as the standard.

2. REFERENCED DOCUMENTS

   2.1 AASHTO Standard:

   M 92 Wire-Cloth Sieves for Testing Purposes
   M 231 Weighing Devices Used in Testing Materials
   T 164 Quantitative Extraction of Bitumen from Bituminous Paving Mixtures

   2.2 ASTM Standards:

   C 670 Practice for Preparing Precision and Bias Statements for Test Methods for Construction Materials

3. SIGNIFICANCE AND USE

   3.1 This test method is used to determine the grading of aggregates extracted from bituminous mixtures. The results are used to determine compliance of the particle size distribution with applicable specifications requirements, and to provide necessary data for control of the production of various aggregates to be used in bituminous mixtures.

4. APPARATUS

   4.1 The apparatus shall consist of the following:

   4.1.1 The balances shall have sufficient capacity, be readable to 0.1percent of the sample mass, or better, and conform to the requirements of M 231.

   4.2 Sieves — The sieves with square openings shall be mounted on substantial frames constructed in a manner that will prevent the loss of materials during sieving. Suitable sieve sizes shall be selected to furnish the information required by the specifications covering the material to be tested. The woven wire cloth sieves shall conform to the requirements of M 92 for Wire Cloth Sieve for Testing Purposes.

5. SAMPLE

   5.1 The sample shall consist of the entire lot or sample of aggregate determined according to Section 8 of T 164, Quantitative Extraction of Bitumen from Bituminous Paving Mixtures from which the bituminous materials has been extracted.

[1]This FOP is based on AASHTO T 30-93 (1998).

6. PROCEDURE

6.1 The sample shall be dried ~~until further drying at 230 ± 9F (110 ± 5C) does not alter the mass 0.1 percent, the precision of weighing~~ according to AASHTO T 255. The total mass of aggregate in the bituminous mixture being tested is the sum of the weights of the dried aggregates and the mineral matter contained in the extracted bitumen. The latter is to be taken as the sum of the weight of ash in the extract and the increase in weight of the filter element as determined in T 164.

6.2 The test sample after being dried and weighed shall be placed in a container and coved with water. Add a sufficient amount of wetting agent to ensure a thorough separation of the material finer than the No. 200 (75-µm) sieve from the coarser particles. The contents of the container shall be agitated vigorously and the wash water poured immediately over a nest of two sieves consisting of a No. 8 or a No. 10 (2.00 or 1.18-mm) sieve superimposed on a No. 200 (75-µm) sieve. The use of a large spoon to stir and agitate the aggregate in the wash water has been found satisfactory.

Note 1: Wetting agents may include any dispersing agent such as a Calgon, Joy, or other detergent, or a soap, which will promote the separation of fine material.

6.3 The agitation shall be sufficiently vigorous to result in complete separation from the coarse particles of all particles finer than the 75-µm sieve and to bring them into suspension so that they may be removed by decantation of the wash water. Care should be taken to avoid, as much as possible, the decantation of the coarse particles of the sample. The operation shall be repeated until the wash water is clear.

6.4 All material retained on the nested shall be returned to the container. The washed aggregate in the container shall be dried ~~to constant mass at a temperature of 230 ± 9F (110 ± 5C), and weigh to the nearest 0.1 percent~~ according to AASHTO T 255.

6.5 Then aggregate shall then be sieved over sieves of the various sizes required by the specification covering the mixture, including the No. 200 (75-µm) sieve. Nest the sieves in order of decreasing size of openings from top to bottom and place the sample on the top sieve. Agitate the sieves by hand or by mechanical apparatus for a sufficient period, established by trial or checked by measurement on actual test sample, to meet the criterion for adequacy of sieving described in Section 6.7.

6.6 Limit the quantity of material on a given sieve so that all particles have the opportunity to reach sieve openings a number of times during the sieving operation. For sieves with openings smaller than No. 4 (4.75-mm), the mass retained on any sieve at the completion of the sieving operation shall not exceed 4 g/in.^{2} (6 kg/m^2) of sieving surface. For sieves with openings No. 4 (4.75 mm) and larger, the mass in kg shall not exceed the product of 2.5 X (sieve opening in mm) X (the sieving surface area in m^2). In no case shall the mass be so great as to cause permanent deformation of the sieve cloth.

Note 2: The 4 g/in.^{2} (6 kg/m^2) amount of 194 g fore the usual 8 inch (203-mm) diameter sieve. The amount of material retained on the sieve may be regulated by (1) the introduction of a sieve with larger openings immediately above the given sieve or (2) testing sample in a number of increments.

6.7 This step is performed during the time of calibration of the shaker. Continue sieving for a sufficient period and in such manner that, after completion, not more than 0.5 percent by mass of the total sample passes any sieve during 60 seconds of continuous hand sieving performed as follows: hold the individual sieve, provided with a snug-fitting pan and cover, in a slightly inclined position in one hand. Strike the side of the sieve sharply and with an upward motion against the heel of the other hand at a rate of approximately 150 times per minute, turning the sieve approximately one-sixth of a revolution at intervals of approximately 25 strokes. In determining the sufficiency of sieving for sizes larger than the No. 4 (4.75 mm) sieve, limit the materials on the sieve to a single layer of particles. If the size of the mounted testing sieves makes the described sieving motion impractical, use 8 inch (203-mm) diameter sieves to verify the sufficiency of sieving.

6.8 The mass of the material passing each sieve and retained on the next and the amount passing the No. 200 (75-µm) sieve. The summation of these various masses must check the dried mass after washing within 0.2 percent of the total mass. The mass of dry material passing the No. 200 (75-µm) sieve by dry sieving shall be added to the mass of the material matter in the bitumen and the mass removed by washing in order to obtain the total passing the No. 200 (75-µm) sieve. If it is desired to check the mass of material washed through the No. 200 (75-µm) sieve, the wash water may be evaporated to dryness or filtered through a tared filter paper that is dried and weighed. The masses of fractions retained on the various sieves and the total passing the No. 200 (75-µm) sieve to percentages by dividing each by the total weight of aggregate in the bituminous mixture from 6.1.

7. REPORT

7.1 The results of the sieve analysis as follows: (a) total percentages passing each sieve, or (b) total percentages retained on each sieve, or (c) percentages retained between consecutive sieves, depending on the form of the specifications for use of the material under test. Percentages to the nearest whole number except for percentages passing the No. 200 (75-µm) sieve, which shall be reported to the nearest 0.1 %.

8. PRECISION AND BIAS

8.1 Precision — The estimates of precision for this test method are listed in Table 1. The estimates are based on the results from the AASHTO Materials Reference Laboratory Proficiency Sample Program, with testing conducted by AASHTO Test Method T 30. The data are based on analyses of the test results from 47 to 133 laboratories who tested 17 pairs of proficiency test samples (Samples No. 1 through 34). The values in the table are given for different ranges of total percent of aggregate passing a sieve.

8.2 Bias — This test method has no bias since the values determined can be defined only in terms of this test method.

Table 1
Precision

	Total Percentage of Material Passing a Sieve		Standard Deviation (1S) Percent[A]	Acceptable Range of Two Results—(D2S)[A] Percent
Extracted Aggregate:[B]				
Single Operator Precision	<100	≥95	0.49	1.4
	<95	≥40	1.06	3.0
	<40	≥25	0.65	1.8
	<25	≥10	0.46	1.3
	<10	≥5	0.29	0.8
	<5	≥2	0.21	0.6
	<2	≥0	0.17	0.5
Multilaboratory Precison	<100	≥95	0.57	1.6
	<95	≥40	1.24	3.5
	<40	≥25	0.84	2.4
	<25	≥10	0.81	2.3
	<10	≥5	0.56	1.6
	<5	≥2	0.43	1.2
	<2	≥0	0.32	0.9

[A]These numbers represent, respectively, the (1S) and (D2S) limits described in Practice C 670.
[B]The precision estimates are based on aggregates with nominal maximum sizes of $^{3}/_{4}$ in. (19.0 mm) to $^{3}/_{8}$ in. (9.5 mm).

Performance Exam Checklist

Mechanical Analysis of Extracted Aggregate
FOP for AASHTO T 30

Participant Name _____ Exam Date _____

Procedure Element	Yes	No
1. Sample consists of all aggregate after ignition (or extraction)?	_____	_____
2. Minimum mass of mix sample based on nominal maximum size?	_____	_____
3. Sample dried to constant mass per T 255 (if extraction used)?	_____	_____
4. Sample placed in container and covered with water?	_____	_____
5. Wetting agent added?	_____	_____
6. Contents of container agitated vigorously?	_____	_____
7. Wash water poured through proper nest of two sieves?	_____	_____
8. Washing continued until wash water is clear?	_____	_____
9. Washed material coarser than No. 200 dried to constant mass.	_____	_____
10. Mass determined to nearest 0.1 percent or nearest 0.1 g?	_____	_____
11. Material sieved on specified sieves (including No. 200)?	_____	_____
12. Sieving continued until not more than 0.5 percent by mass of the total sample passes a given sieve in 1 minute (check by hand using round sieve)?	_____	_____
13. Mass of each fraction of aggregate, including minus No. 200, determined?	_____	_____
14. Does summation of fraction mass check total washed dry mass within 0.2 percent?	_____	_____

Procedure Element	**Yes**	**No**
15. Sizes larger than No. 200 reported to nearest 1.0 percent?	_____	_____
16. Minus No. 200 reported to nearest 0.1 percent?	_____	_____

Comments: First attempt: Pass ☐ Fail ☐ Second attempt: Pass ☐ Fail ☐

_____

_____

_____

_____

_____

_____

_____

_____

_____

_____

Signature of Examiner _____

SAMPLING BITUMINOUS MATERIALS
FOP FOR AASHTO T 40

Significance

01

The quality of bituminous materials has a
02 tremendous impact on a roadway project. The grade of binder selected is based on a number of factors, including local temperature extremes and characteristics of expected traffic. Using a grade of binder material other than that specified will have serious impacts on roadway performance and durability.

Scope

The procedure covers obtaining samples of liquid bituminous materials in accordance with AASHTO T 40. Sampling of solid and semi-solid bituminous materials – included in AASHTO T 40 – is not covered here.

Agency sampling of HMA binder and emulsified binders may be more specific on exactly where to sample and what type of sampling device to use.

WSDOT personnel need to observe the contractor's personnel sampling to assure that proper sampling procedures are followed.

If proper sampling procedures are not followed it shall be noted on the sample transmittal "Proper sampling procedures not followed." See Std. Spec 1-06.

Samples of Emulsions and Liquid Asphalt for BST to be taken by WDOT personnel.

Procedure

03

1. Coordinate sampling with contractor or supplier.
2. Use appropriate safety equipment and precautions.
3. Allow a minimum of 4 L (1 gal) to flow before obtaining samples.

4. Obtain samples as indicated below.

04

- Hot Mix Asphalt (HMA) Plants: Obtain the samples from the line between the storage tank and the mixing plant while the plant is in operation~~, or from the delivery truck~~.

05

- ~~Distributors: Obtain the sample directly from the spray bar or application device if the bituminous liquid has not been diluted; otherwise, sample at delivery or prior to dilution.~~
- Distributors: Obtain the sample directly from the distributor's sampling valve, the spray bar or application device if the bituminous liquid has not been diluted; otherwise, sample at delivery or prior to dilution.

Material may also be sampled from the delivery truck before it is pumped into the distributor.

Containers

06 Sample containers must be new, and the inside may not be washed or rinsed. The outside may be wiped with a clean, dry cloth.

All samples shall be put in 1 L (1 qt) containers and properly identified on the outside of the container with contract number, date sampled, data sheet number, brand and grade of material, and sample number. Include lot and sublot numbers when appropriate.

07 The filled sample container shall not be submerged in solvent, nor shall it be wiped with a solvent saturated cloth. If cleaning is necessary, use a clean dry cloth.

- Emulsified asphalt: Use wide-mouth plastic jars with screw caps. Protect the samples from freezing since water is a part of the emulsion.

Tips! 08

- Remember to identify sample on outside of container.

09

- All other bituminous liquids: Use metal cans.

<u>Standard sample labels (WSDOT Form 350-016) shall be completely filled out and attached to each sample container.</u>

Performance Exam Checklist

Sampling Bituminous Materials
FOP for AASHTO T 40

Participant Name _____ Exam Date _____

Procedure Element	Yes	No
1. Appropriate containers used?		
a. Wide-mouth plastic containers (emulsified).	_____	_____
b. Metal cans (all other bituminous liquids).	_____	_____
2. Containers not washed or rinsed on inside?	_____	_____
3. Minimum of 4 L allowed to flow before sample taken?	_____	_____
4. Material obtained at correct location?		
a. Line between storage tank and mixing plant or flow delivery vehicle (HMA plants).	_____	_____
b. Spray bar or application device, if not diluted (distributors).	_____	_____
c. From delivery vehicle or prior to dilution, if diluted (distributors).	_____	_____

Sample taken by: Contractor ☐ WSDOT ☐

Comments: First attempt: Pass ☐ Fail ☐ Second attempt: Pass ☐ Fail ☐

_____

_____

_____

_____

_____

_____

_____

_____

_____

_____

Signature of Examiner _____

WSDOT Test Method for AASHTO T 99[1]

Moisture-Density Relations of Soils Using a 5.5-lb (2.5-kg) Rammer and a 12-in. (305-mm) Drop

1. SCOPE

1.1 These methods of test are intended for determining the relation between the moisture content and density of soils compacted in a mold of a given size with a 5.5-lb (2.5-kg) rammer dropped from a height of 12-in. (305-mm). Four alternate procedures are provided as follows:

Method A
A 4-in. (101.60-mm) mold: Soil material passing a No. 4 (4.75-mm) sieve
Sections 3 and 4.

Method B
A 6-in. (152.40-mm) mold: Soil material passing a No. 4 (4.75-mm) sieve
Sections 5 and 6.

Method C
A 4-in. (101.60-mm) mold: Soil material passing a 3/4-in. (19.0-mm) sieve
Sections 7 and 8.

Method D
A 6-in. (152.40-mm) mold: Soil material passing a 3/4-in. (19.0-mm) sieve
Sections 9 and 10.

<u>The preferred method of WSDOT is to use Method A.</u>

1.2 The method to be used should be indicated in the specifications for the material being tested. If no method is specified, the provisions of Method A shall govern.

1.3 The following applies to all specified limits in this standard: For the purposes of determining conformance with these specifications, an observed value or a calculated value shall be rounded off “to the nearest unit” in the last right-hand place of figures used in expressing the limiting value, in accordance with R 11, Indicating Which Places of Figures Are to Be Considered Significant in Specified Limiting Values.

1.4 The values stated in English units are to be regarded as the standard.

2. APPARATUS

2.1 Molds — The molds shall be solid-wall, metal cylinders manufactured with dimensions and capacities shown in Sections 2.1.1 and 2.1.2 below. They shall have a detachable collar assembly approximately 2.375 in. (60 mm) in height, to permit preparation of compacted specimens of soil-water mixtures of the desired height and volume. The mold and collar assembly shall be so constructed that it can be fastened firmly to a detachable base plate made of the same material (Note 1). The base plate shall be plane to 0.005 in. as shown in Figures 1 and 2.

[1]This Test Method is based on AASHTO T 99-97 (1999).

Note 1: Alternate types of molds with capacities as stipulated herein may be used, provided the test results are correlated with those of the solid-wall mold on several soil types and the same moisture-density results are obtained. Records of such correlation shall be maintained and readily available for inspection, when alternate types of molds are used.

2.1.1 A 4-in. (101.6-mm) mold having a capacity of 1/30 (0.0333) ± 0.0003 cu. ft. (0.000943 ± 0.000008 m^3) with an internal diameter of 4.000 ± 0.016 in. (101.60 ± 0.41 mm) and a height of 4.584 ± 0.005 in. (116.43 ± 0.13 mm) (Figure 1).

2.1.2 A 6-in. (152.4-mm) mold having a capacity of 1/13.33 (0.07500) ± 0.00075 cu. ft. (0.002124 ± 0.000021 m^3) with an internal diameter of 6.000 ± 0.026 in. (152.40 ± 0.66 mm) and a height of 4.584 ± 0.005 in. (116.43 ± 0.13 mm) (Figure 2).

2.1.3 Molds Out of Tolerance Due to Use — A mold that fails to meet manufacturing tolerances after continued service may remain in use provided those tolerances are not exceeded by more than 50 percent; and the volume of the mold, calibrated in accordance with Section 8 (Calibration of Measure) of T 19/T 19M, for Unit Mass of Aggregate, is used in the calculations.

2.2 Rammer

2.2.1 Manually Operated — Metal rammer with a mass of 5.5 ± 0.02 lb (2.495 ± 0.009 kg), and having a flat circular face of 2.000-in. (50.80-mm) diameter with a manufacturing tolerance of 0.01 in. (± 0.25 mm). The in-service diameter of the flat circular face shall be not less than 1.985 in. (50.42 mm). The rammer shall be equipped with a suitable guide-sleeve to control the height of drop to a free fall of 12.00 ± 0.06 in. (305 ± 2 mm) above the elevation of the soil. The guide-sleeve shall have at least 4 vent holes, no smaller than 3/8-in. (9.5-mm) diameter spaced approximately 90 degrees (1.57 rad) apart and approximately 3/4 in. (19 mm) from each end; and shall provide sufficient clearance so the free fall of the rammer shaft and head is unrestricted.

2.2.2 Mechanically Operated — A metal rammer which is equipped with a device to control the height of drop to a free fall of 12.00 ± 0.06 in. (305 ± 2 mm) above the elevation of the soil and uniformly distributes such drops to the soil surface (Note 2). The rammer shall have a mass of 5.5 ± 0.02 lb (2.495 ± 0.009 kg), and have a flat circular face of 2.000-in. (50.80 mm) diameter with a manufactured tolerance of 0.01 in. (± 0.25 mm). The in-service diameter of the flat circular face shall be not less than 1.985 in. (50.42 mm). The mechanical rammer shall be calibrated by ASTM D 2168.

Note 2: It may be impractical to adjust the mechanical apparatus so the free fall is 12 in. (305 mm) each time the rammer is dropped, as with the manually operated rammer. To make the adjustment of free fall, the portion of loose soil to receive the initial blow should be slightly compressed with the rammer to establish the point of impact from which the 12 in. (305 mm) drop is determined. Subsequent blows on the layer of soil being compacted may all be applied by dropping the rammer from a height of 12 in. (305 mm) above the initial-setting elevation; or, when the mechanical apparatus is designed with a height adjustment for each blow, all subsequent blows should have a rammer free fall of 12 in. (305 mm) measured from the elevation of the soil as compacted by the previous blow. A more detailed calibration procedure for laboratory mechanical-rammer soil compactors can be found in ASTM D 2168.

2.2.3 Rammer Face — The circular face rammer shall be used but a sector face may be used as an alternative provided the report shall indicate type of face used other than the 2-in. (50.8-mm) circular face and it shall have an area equal to that of the circular face rammer.

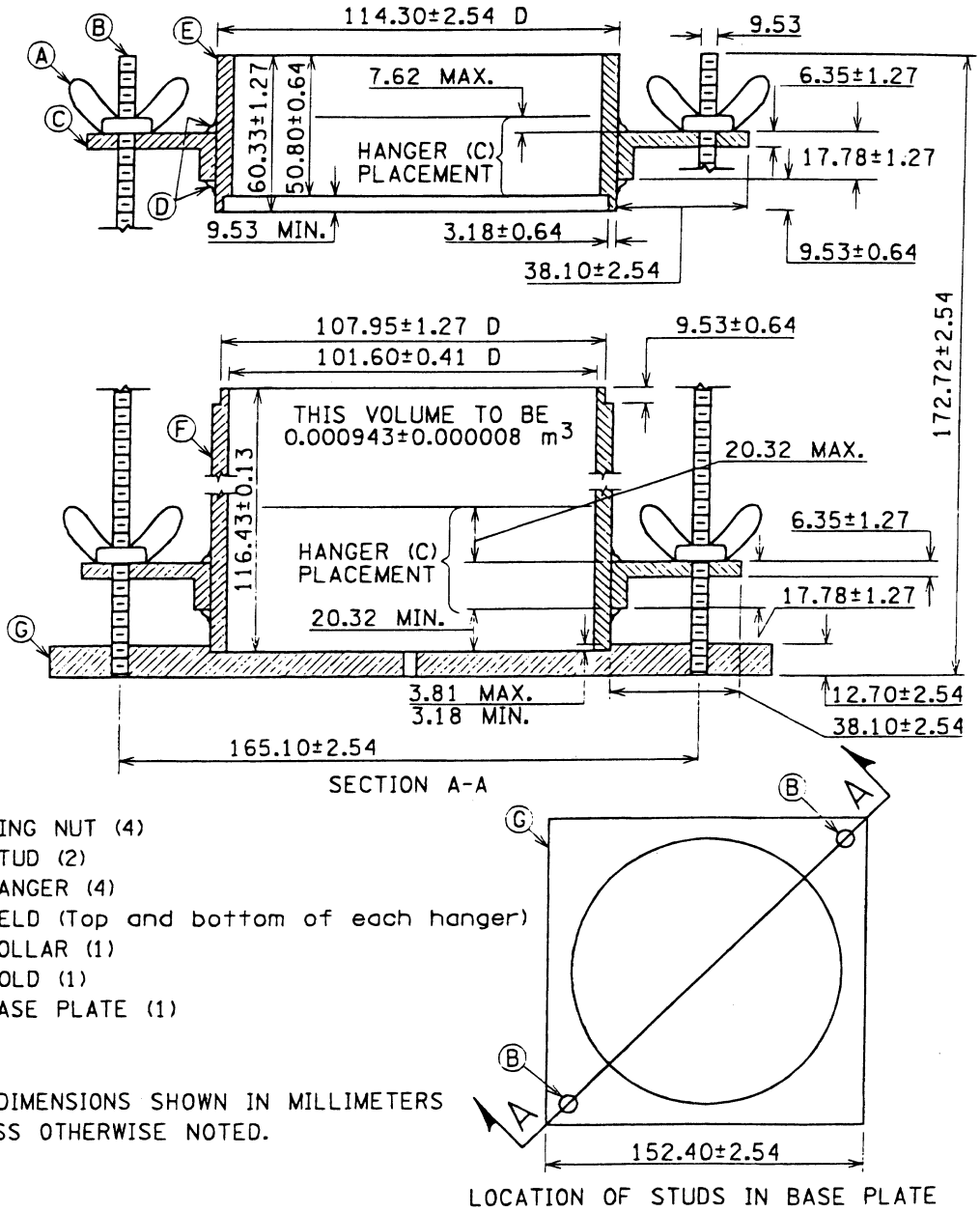

(A) WING NUT (4)
(B) STUD (2)
(C) HANGER (4)
(D) WELD (Top and bottom of each hanger)
(E) COLLAR (1)
(F) MOLD (1)
(G) BASE PLATE (1)

NOTE:
ALL DIMENSIONS SHOWN IN MILLIMETERS UNLESS OTHERWISE NOTED.

Dimensional Equivalents

mm	in.	mm	in.
3.18 ± 0.64	0.125 ± 0.025	50.80 ± 0.64	2.000 ± 0.025
3.81	0.150	60.33 ± 1.27	2.375 ± 0.050
6.35 ± 1.27	0.250 ± 0.050	101.60 ± 0.41	4.000 ± 0.016
7.62	0.300	107.95 ± 1.27	4.250 ± 0.050
9.53 ± 0.64	0.375 ± 0.025	114.30 ± 2.54	4.500 ± 0.100
12.70 ± 2.54	0.500 ± 0.100	116.43 ± 0.13	4.584 ± 0.005
17.78 ± 1.27	0.700 ± 0.050	152.40 ± 2.54	6.000 ± 0.100
20.32	0.800	165.10 ± 2.54	6.500 ± 0.100
38.10 ± 2.54	1.500 ± 0.100	172.72 ± 2.54	6.800 ± 0.100

0.000943 ± 0.000008 m^3 1/30 ± 0.0003 ft^3

Cylindrical Mold and Base Plate (101.6-mm mold)
Figure 1

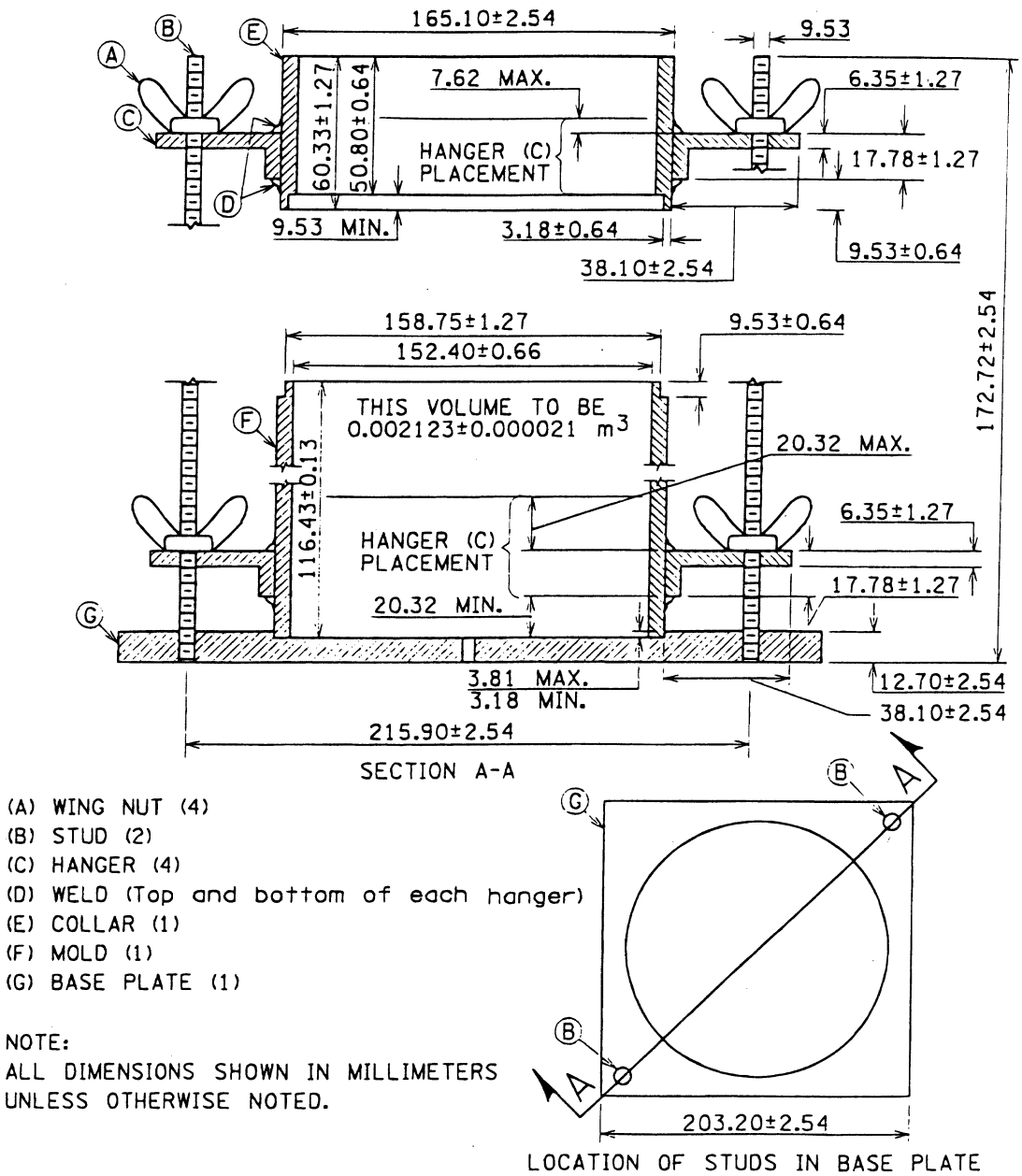

Dimensional Equivalents

mm	in.	mm	in.
3.18 ± 0.64	0.125 ± 0.025	50.80 ± 0.64	2.000 ± 0.025
3.81	0.150	60.33 ± 1.27	2.375 ± 0.050
6.35 ± 1.27	0.250 ± 0.050	116.43 ± 0.13	4.584 ± 0.005
7.62	0.300	152.40 ± 0.66	6.000 ± 0.026
9.53 ± 0.64	0.375 ± 0.025	158.75 ± 1.27	6.250 ± 0.050
12.70 ± 2.54	0.500 ± 0.100	165.10 ± 2.54	6.500 ± 0.100
17.78 ± 1.27	0.700 ± 0.050	172.72 ± 2.54	6.800 ± 0.100
20.32	0.800	203.23 ± 2.54	8.000 ± 0.100
38.10 ± 2.54	1.500 ± 0.100	215.90 ± 2.54	8.500 ± 0.100

0.002123 ± 0.000021 m^3 1/13.33 ± 0.00075 ft^3

Cylindrical Mold and Base Plate (152.4-mm mold)
Figure 2

2.3 Sample Extruder (for Solid-Walled Molds Only) — A jack, lever, frame, or other device adopted for the purpose of extruding compacted specimens from the mold.

2.4 Balances and Scales — A balance or scale conforming to the requirements of AASHTO M 231, Class G 20. Also, a balance conforming to the requirements of AASHTO M 231, Class G 2.

Note 3: The capacity of the metric balance or scale should be approximately 11.5 kg when used to weigh the 6-in. (152.40-mm) mold and compacted, moist soil; however, when the 4-in. (101.60-mm) mold is used, a balance or scale of lesser capacity than the 11.5 kg may be used, if the sensitivity and readability is 5 g.

2.5 Drying Oven — A thermostatically controlled drying oven capable of maintaining a temperature of 230 ± 9°F (110 ± 5°C) for drying moisture samples.

2.6 Straightedge — A hardened-steel straightedge at least 10 in. (250 mm) in length. It shall have one beveled edge, and at least one longitudinal surface (used for final trimming) shall be plane within 0.01 in. per 10 in. (0.250 mm per 250 mm) (0.1 percent) of length within the portion used for trimming the soil (Note 4).

Note 4: The beveled edge may be used for final trimming if the edge is true within a tolerance of 0.01 in. per 10 in. (0.250 mm per 250 mm) (0.1 percent) of length; however, with continued use, the cutting edge may become excessively worn and not suitable for trimming the soil to the level of the mold. The straightedge should not be so flexible that trimming the soil with the cutting edge will cause a concave soil surface.

2.7 Sieves — 2-in. (50-mm), 3/4-in. (19.0-mm), and No. 4 (4.75-mm) sieves conforming to the requirements of AASHTO M 92, Wire-Cloth Sieves for Testing Purposes.

2.8 Mixing Tools — Miscellaneous tools such as mixing pan, spoon, trowel, spatula, etc., or a suitable mechanical device for thoroughly mixing the sample of soil with increments of water.

2.9 Containers — Suitable containers made of material resistant to corrosion and not subject to change in mass or disintegration on repeated heating and cooling. Containers shall have close-fitting lids to prevent loss of moisture from samples before initial mass determination and to prevent absorption of moisture from the atmosphere following drying and before final mass determination. One container is needed for each moisture content determination.

METHOD A

3. SAMPLE

3.1 If the soil sample is damp when received from the field, dry it until it becomes friable under a trowel. Drying may be in air or by use of a drying apparatus which is maintained at a temperature not exceeding 140°F (60°C). Then thoroughly break up the aggregations in such a manner as to avoid reducing the natural size of individual particles.

3.2 Sieve an adequate quantity of the representative pulverized soil over the No. 4 (4.75-mm) sieve. Discard the coarse material, if any, retained on the No. 4 (4.75-mm) sieve.

3.3 Select a representative sample, with a mass of approximately 7 lb (3 kg) or more, of the soil prepared as described in Sections 3.1 and 3.2.

4. PROCEDURE

4.1 Thoroughly mix the selected representative sample with sufficient water to dampen it to approximately four percentage points below optimum moisture content.

4.2 Form a specimen by compacting the prepared soil in the 4-in. (101.60-mm) mold (with collar attached) in three approximately equal layers to give a total compacted depth of about 5 in. (125 mm). Prior to compaction, place the loose soil into the mold and spread into a layer of uniform thickness. Lightly tamp the soil prior to compaction until it is not in a loose or fluffy state, using either the manual compaction rammer or similar device having a face diameter of approximately 2 in. (50 mm). Following compaction of each of the first two layers, any soil adjacent to the mold walls that has not been compacted or extends above the compacted surface shall be trimmed using a knife or other suitable device, and be evenly distributed on top of the layer. Compact each layer by 25 uniformly distributed blows from the rammer dropping free from a height of 12 in. (305 mm) above the elevation of the soil when a sleeve-type rammer is used, or from 12 in. (305 mm) above the approximate elevation of compacted soil when a stationary mounted type of rammer is used. During compaction, the mold shall rest firmly on a dense, uniform, rigid, and stable foundation or base. This base shall remain stationary during the compaction process (Note 5).

Note 5: Each of the following has been found to be a satisfactory base on which to rest the mold during compaction of the soil: A block of concrete, with a mass not less than 200 lb (90 kg), supported by a relatively stable foundation; a sound concrete floor; and for field application, such surfaces as are found in concrete box culverts, bridges, and pavements.

4.2.1 Following compaction, remove the extension collar, carefully trim the compacted soil even with the top of the mold by means of the straightedge, and determine the mass of the mold and moist soil in kilograms to the nearest 5 grams, or determine the mass in pounds to the nearest 0.01 pounds. For molds conforming to tolerances given in Section 2.1.1 and masses recorded in kilograms, multiply the mass of the compacted specimen and the mold, minus the mass of the mold, by 1060, and record the result as the wet density, W_1, in kilograms per cubic meter, of compacted soil. For molds conforming to tolerances given in Section 2.1.1 and masses recorded in pounds, multiply the mass of the compacted specimen and the mold, minus the mass of the mold, by 30, and record the result as the wet density, W_1, in pounds per cubic foot, of compacted soil. For used molds out of tolerance by not more than 50 percent (Section 2.1.3), use the factor for the mold as determined in accordance with Calibration of Measure in AASHTO T 19/T 19M.

4.3 Remove the material from the mold and slice vertically through the center. Take a representative sample of the material from one of the cut faces, weigh immediately and dry in accordance with T 255 or T 265, Laboratory Determination of Moisture Content of Soils, to determine the moisture content, and record the results.

4.4 Thoroughly break up the remaining portion of the molded specimen until it will pass a No. 4 (4.75-mm) sieve as judged by eye, and add to the remaining portion of the sample being tested. Add water in sufficient amount to increase the moisture content of the soil one to two percentage points (water content increments should not exceed 2.5 percent except when heavy clay soils or organic soils exhibiting flat elongated curves are encountered, the water content increments may be increased to a maximum of 4 percent), and repeat the above procedure for each increment of water added. Continue this series of determinations until there is either a decrease or no change in the wet unit mass, W_1, per cubic foot (cubic meter) of the compacted soil (Note 6).

Note 6: This procedure has been found satisfactory in most cases. However, in instances where the soil material is fragile in character and will reduce significantly in grain size due to repeated compaction, and in cases where the soil is a heavy-textured clayey material into which it is difficult to incorporate water, a separate and new sample shall be used in each compaction test. In these cases, separate samples shall be thoroughly mixed with amounts of water sufficient to cause the moisture contents of the samples to vary by approximately two percentage points. The moisture points selected shall bracket the optimum moisture content, thus providing samples which, when compacted, will increase in mass to the maximum density and then decrease in mass. The samples of soil-water mixtures shall be placed in covered containers and allowed to stand for not less than 12 hours before making the moisture-density test.

4.4.1 In instances where the soil material is fragile in character and will be reduced significantly in grain size by repeated compaction, a separate and new sample shall be used in each compaction test.

METHOD B

5. SAMPLE

5.1 Select the representative sample in accordance with Section 3.3, except that it shall have a mass of approximately 16 lb (7 kg).

6. PROCEDURE

6.1 Follow the same procedure as described for Method A in Section 4, except for the following: Form a specimen by compacting the prepared soil in the 6-in. (152.4-mm) mold (with collar attached) in three approximately equal layers to give a total compacted depth of about 5 in. (125 mm), each layer being compacted by 56 uniformly distributed blows from the rammer. For molds conforming to tolerances given in Section 2.1.2, and masses recorded in kilograms, multiply the mass of the compacted specimen and the mold, minus the mass of the mold, by 471, and record the result as the wet density, W_1, in kilograms per cubic meter, of compacted soil. For molds conforming to tolerances given in Section 2.1.2, and masses recorded in pounds, multiply the mass of the compacted specimen and the mold, minus the mass of the mold, by 13.3, and record the result as the wet density, W_1, in pounds per cubic foot, of compacted soil. For used molds out of tolerance by not more than 50 percent (Section 2.1.3), use the factor for the mold as determined in accordance with Calibration of Measure in AASHTO T 19/T 19M.

METHOD C

7. SAMPLE

7.1 If the soil sample is damp when received from the field, dry it until it becomes friable under a trowel. Drying may be in air or by use of a drying apparatus which is maintained at a temperature not exceeding 140°F (60°C). Then thoroughly break up the aggregations in such a manner as to avoid reducing the natural size of individual particles.

7.2 Sieve an adequate quantity of the representative pulverized soil over the 19.0-mm sieve. Discard the coarse material, if any, retained on the $^3/_4$ in. (19.0-mm) sieve (Note 7).

Note 7: If it is advisable to maintain the same percentage of coarse material (passing a 2 in. (50-mm) sieve and retained on a No. 4 (4.75-mm) sieve) in the moisture-density sample as in the original field sample, the material retained on the $^3/_4$ in. (19.0-mm) sieve shall be replaced as follows: Sieve an adequate quantity of the representative pulverized soil over

the 2 in. - 3/4 in. (50- and 19.0-mm) sieves. Determine the mass of the material passing the 2 in. (50-mm) sieve and retained on the 3/4 in. (19.0-mm) sieve and replace it with an equal mass of material passing the 3/4 in. (19.0-mm) sieve and retained on the No. 4 (4.75-mm) sieve. Take the material for replacement from the remaining portion of the sample.

7.3 Select a representative sample, having a mass of approximately 11 lb (5 kg) or more, of the soil prepared as described in Sections 7.1 and 7.2.

8. PROCEDURE

8.1 Thoroughly mix the selected representative sample with sufficient water to dampen it to approximately 4 percentage points below optimum moisture content.

8.2 Form a specimen by compacting the prepared soil in the 4-in. (101.60-mm) mold (with collar attached) in three approximately equal layers to give a total compacted depth of about 5 in. (125 mm). Prior to compaction, place the loose soil into the mold and spread into a layer of uniform thickness. Lightly tamp the soil prior to compaction until it is not in a loose or fluffy state, using either the manual compaction rammer or similar device having a face diameter of approximately 2 in. (50 mm). Following compaction of each of the first two layers, any soil adjacent to the mold walls that has not been compacted or extends above the compacted surface shall be trimmed using a knife or other suitable device, and be evenly distributed on top of the layer. Compact each layer by 25 uniformly distributed blows from the rammer dropping free from a height of 12 in. (305 mm) above the elevation of the soil when a sleeve-type rammer is used, or from 12 in. (305 mm) above the approximate elevation of each finely compacted layer when a stationary mounted type rammer is used. During compaction, the mold shall rest firmly on a dense, uniform, rigid and stable foundation (Note 5).

8.2.1 Following compaction, remove the extension collar, carefully trim the compacted soil even with the top of the mold by means of the straightedge. Holes developed in the surface by removal of coarse material shall be patched with smaller sized material. Determine the mass of the mold and moist soil in kilograms to the nearest 5 grams, or determine the mass in pounds to the nearest 0.01 pounds. For molds conforming to tolerances given in Section 2.1.1 and masses recorded in kilograms, multiply the mass of the compacted specimen and the mold, minus the mass of the mold, by 1060, and record the result as the wet density, W_1, in kilograms per cubic meter, of compacted soil. For molds conforming to tolerances given in Section 2.1.1 and masses recorded in pounds, multiply the mass of the compacted specimen and the mold, minus the mass of the mold, by 30, and record the result as the wet density, W_1, in pounds per cubic foot, of compacted soil. For used molds out of tolerance by not more than 50 percent (2.1.3), use the factor for the mold as determined in accordance with Section 8 (Calibration of Measure), AASHTO T 19/T 19M.

8.3 Remove the material from the mold and slice vertically through the center. Take a representative sample of the material fro one of the cut faces, determine the mass immediately and dry in accordance with T 255 or T 265, Laboratory Determination of Moisture Content of Soils, to determine the moisture content, and record the results.

8.4 Thoroughly break up the remainder of the material until it will pass a 3/4 in. (19.0-mm) sieve and 90 percent of the soil aggregations will pass a No. 4 (4.75-mm) sieve as judged by eye, and add to the remaining portion of the sample being tested. Add water in sufficient amounts to increase the moisture content of the soil sample by one or two percentage points, and repeat the above procedure for each increment of water added. Continue this series of determinations until there is either a decrease or no change in the wet mass, W_1, per cubic foot (cubic meter) of compacted soil (Note 6).

METHOD D

9. SAMPLE

9.1 Select the representative sample in accordance with Section 7.3 except that it shall have a mass of approximately 25 lb (11 kg).

10. PROCEDURE

10.1 Follow the same procedure as described for Method C in Section 8, except for the following: Form a specimen by compacting the prepared soil in the 6-in. (152.4-mm) mold (with collar attached) in three approximately equal layers to give a total compacted depth of about 5 in. (125 mm), each layer being compacted by 56 uniformly distributed blows from the rammer. For molds conforming to tolerances given in Section 2.1.2, and masses recorded in kilograms, multiply the mass of the compacted specimen and the mold, minus the mass of the mold, by 471, and record the result as the wet density, W_1, in kilograms per cubic meter, of compacted soil. For molds conforming to tolerances given in Section 2.1.2, and masses recorded in pounds, multiply the mass of the compacted specimen and the mold, minus the mass of the mold, by 13.33, and record the result as the wet density, W_1, in pounds per cubic foot, of the compacted soil. For used molds out of tolerance by not more than 50 percent (Section 2.1.3), use the factor for the mold as determined in accordance with Section 8 (Calibration of Measure), AASHTO T 19/T 19M.

CALCULATIONS AND REPORT

11. CALCULATIONS

11.1 Calculate the moisture content and the dry unit mass of the soil as compacted for each trial, as follows:

$$w = \frac{A - B}{B - C} \text{ X } 100$$

and

$$W = \frac{W_1}{w + 100} \text{ X } 100$$

where:

w = percentage of moisture in the specimen, based on oven dry mass of soil;

A = mass of container and wet soil;

B = mass of container and dry soil;

C = mass of container;

W = dry mass, in kilograms per cubic meter of compacted soil, or pounds per cubic foot of compacted soil; and

W_1 = wet mass, in kilograms per cubic meter of compacted soil, or pounds per cubic foot of compacted soil.

12. MOISTURE-DENSITY RELATIONSHIP

12.1 The calculations in Section 11.1 shall be made to determine the moisture content and corresponding oven-dry unit mass (density) in kilograms per cubic meter or pounds per cubic foot of the compacted samples. The oven-dry densities (unit mass) of the soil shall be plotted as ordinates and the corresponding moisture content as abscissas.

12.2 Optimum Moisture Content — When the densities and corresponding moisture contents for the soil have been determined and plotted as indicated in Section 12.1, it will be found that by connecting the plotted points with a smooth line, a curve is produced. The moisture content corresponding to the peak of the curve shall be termed the "optimum moisture content" of the soil under the above compaction.

12.3 Maximum Density — The oven-dry density in pounds per cubic foot (kilograms per cubic meter) of the soil at optimum moisture content shall be termed "maximum density" under the above compaction.

13. REPORT

13.1 The report shall include the following:

13.1.1 The method used (Method A, B, C, or D).

13.1.2 The optimum moisture content, as a percentage, to the nearest whole number.

13.1.3 The maximum density in pounds per cubic foot to the nearest whole number (kilograms per cubic meter to the nearest 10 kg/m^3).

13.1.4 In Methods C and D indicate if the material retained on the $^3/_4$ in. (19.0-mm) sieve was removed or replaced.

13.1.5 Type of face if other than 2 in. (50.8 mm) circular.

14. PRECISION STATEMENT

14.1 Repeatability — (Single operator) – Two results obtained by the same operation on the same sample in the same laboratory using the same apparatus, and on different days should be considered suspect if they differ by more than 10 percent of their mean for optimum moisture content and 2.2 lb/ft^3 (35 kg/m^3) for maximum density.

14.2 Reproducibility — (Multi-Laboratory) – Two results obtained by different operators in different laboratories should b considered suspect if they differ by more than 15 percent of their mean for optimum moisture and 4.5 lb/ft^3 (72 kg/m^3) for maximum density.

Tester Qualification Practical Exam Checklist

Moisture-Density Relations of Soils Using a 5.5-lb (2.5-kg) Rammer and a 12-in. (305-mm) Drop
FOP for AASHTO T 99

Participant Name _____ Exam Date _____

Procedure Element	**Yes**	**No**
Sample Preparation		
1. If damp, sample dried in air or drying apparatus, not exceeding 140°F (60°C)?	_____	_____
2. Sample pulverized and adequate amount sieved over the No. 4 (4.75 mm) sieve?	_____	_____
3. Material retained on the sieve discarded?	_____	_____
4. Sample passing the sieve has appropriate mass?	_____	_____
Procedure		
1. Sample mixed with water to approximately 4 percent below expected optimum moisture content?	_____	_____
2. Layer of soil placed in mold with collar attached?	_____	_____
3. Mold placed on rigid and stable foundation?	_____	_____
4. Soil compacted with 25 blows?	_____	_____
5. Soil placed in three equal layers?	_____	_____
6. Collar removed and soil trimmed to top of mold with straightedge?	_____	_____
7. Mass of mold and contents determined to appropriate precision?	_____	_____
8. Wet mass of specimen multiplied by appropriate factor to obtain wet density (.03333 lbs/ft^3)?	_____	_____
9. Soil removed from mold using sample extruder?	_____	_____
10. Soil sliced vertically through center?	_____	_____
11. Moisture sample removed from one cut face and moist mass determined immediately?	_____	_____
12. Moisture sample mass of at least 100 g?	_____	_____
13. Sample dried and water content determined according to AASHTO T 255 or T 265?	_____	_____
14. Remainder of material from mold broken up to about passing sieve size and added to remainder of original test sample?	_____	_____

Procedure Element	Yes	No
15. Water added to increase moisture content in approximately 2 percent increments?	_____	_____
16. Steps 2 through 15 repeated for each increment of water added?	_____	_____
17. If soil is plastic (clay types):		
a. Sample mixed with water varying moisture content by approximately 2 percent, bracketing the optimum moisture content?	_____	_____
b. Samples placed in covered containers and allowed to stand for at least 15 hours?	_____	_____
18. Process continued until wet density either decreases or stabilizes?	_____	_____
19. Water content and dry density calculated for each sample?	_____	_____
20. Dry density plotted on vertical axis, moisture content plotted on horizontal axis, and points connected with a smooth curve?	_____	_____
21. Water content at peak of curve recorded as optimum water content and recorded to nearest 1 percent?	_____	_____
22. Dry density at optimum water content reported as maximum density, to nearest 1 lb/ft^3 (10 kg/m^3)?	_____	_____

Comments: First attempt: Pass ☐ Fail ☐ Second attempt: Pass ☐ Fail ☐

_____

_____

_____

_____

_____

_____

_____

_____

_____

_____

Signature of Examiner _____

WSDOT Test Method for AASHTO T 106[1]

Compressive Strength of Hydraulic Cement Mortars (Using 2-in. or (50-mm) Cube Specimens)

1. SCOPE

1.1 This test method covers determination of the compressive strength of hydraulic cement mortars, using 2-in. or (50-mm) cube specimens.

Note 1: Test Method C 349 provides an alternative procedure for this determination (not to be used for acceptance tests).

1.2 The values stated in SI units are to be regarded as the standard. The values in parentheses are for information only.

1.3 Values in SI units shall be obtained by measurement in SI units or by appropriate conversion, using the Rules for Conversion and Rounding given in Standard IEEE/ASTM SI 10, of measurements made in other units.

1.4 *This standard does not purport to address all of the safety concerns, if any, associated with its use. It is the responsibility of the user of this standard to establish appropriate safety and health practices and determine the applicability of regulatory limitations prior to use.*

2. REFERENCED DOCUMENTS

2.1 *AASHTO Standards:*

M 152	Flow Table for Use in Tests of Hydraulic Cement
M 201	Moist Cabinets, Moist Rooms, and Water Storage Tanks Used in the Testing of Hydraulic Cements and Concretes
R11	Recommended Practice for Indicating Which Places of Figures Are to be Considered Significant in Specified Limiting Values
T 162	Mechanical Mixing of Hydraulic Cement Pastes and Mortars of Plastic Consistency

2.2 *ASTM Standards:*

C 349	Test Method for Compressive Strength of Hydraulic Cement Mortars (Using Portions of Prisms Broken in Flexure)
C 670	Practice for Preparing Precision and Bias Statements for Test Methods for Construction Materials
C 778	Specification for Standard Sand 2
C 1005	Specification for Weights and Weighing Devices for Use in Physical Testing of Hydraulic Cements
IEEE/ASTM SI 10	Standard for Use of the International System of Units (SI): The Modern Metric System

[1]This Test Method is based on AASHTO T 106-00.

3. SUMMARY OF TEST METHOD

3.1 The mortar used consists of one part cement and 2.75 parts of sand proportioned by mass. Portland or air-entraining portland cements are mixed at specified water/cement ratios. Water content for other cements is sufficient to obtain a flow of 110 ± 5 in 25 drops of the flow table. Two-inch or (50-mm) test cubes are compacted by tamping in two layers. The cubes are cured 24 hours in the molds and stripped and immersed in lime water until tested.

4. SIGNIFICANCE AND USE

4.1 This test method provides a means of determining the compressive strength of hydraulic cement and other mortars and results may be used to determine compliance with specifications. Further, this test method is referenced by numerous other specifications and test methods. Caution must be exercised in using the results of this test method to predict the strength of concretes.

5. APPARATUS

5.1 *Standard Masses and Balances,* shall conform to the requirements of Specification ASTM C 1005. The balance device shall be evaluated for precision and bias at a total load of 2000 g.

5.2 *Glass Graduate*s, of suitable capacities (preferably large enough to measure the mixing water in a single operation) to deliver the indicated volume at 20°C. The permissible variation shall be ±2 mL. These graduates shall be subdivided to at least 5 mL, except that the graduation lines may be omitted for the lowest 10 mL for a 250-mL graduate and for the lowest 25 Ml of a 500-mL graduate. The main graduation lines shall be circles and shall be numbered. The least graduations shall extend at least one seventh of the way around, and intermediate graduations shall extend at least one fifth of the way around.

5.3 *Specimen Mold*s, for the 2-in. or (50-mm) cube specimens shall be tight fitting. The molds shall have not more than three cube compartments and shall be separable into not more than two parts. The parts of the molds when assembled shall be positively held together. The molds shall be made of hard metal not attacked by the cement mortar. For new molds the Rockwell hardness number of the metal shall be not less than 55 HRB. The sides of the molds shall be sufficiently rigid to prevent spreading or warping. The interior faces of the molds shall be plane surfaces and shall conform to the tolerances of Table 1.

Table 1
Permissible Variations of Specimen Molds

	2 in. Cube Molds		**50-mm Cube Molds**	
Parameter	**New**	**In Use**	**New**	**In Use**
Planeness of Sides	<0.001 in.	<0.002 in.	<0.025 mm	<0.05 mm
Distance Between Opposite Sides	2 in. ± 0.005 in.	2 in. ± 0.02 in.	50 mm ± 0.13 mm	50 mm ± 0.50 mm
Height of Each Compartment	2 in. ± 0.001 in. to -0.005 in.	2 in. ± 0.01 in. to -0.015 in.	50 mm ± 0.25 mm to -0.013 mm	50 mm ± 0.25 mm to -0.38 mm
Angle Between Adjacent Faces[A]	90 ± 0.5°	90 ± 0.5°	90 ± 0.5°	90 ± 0.5°

[A]Measured at points slightly removed from the intersection. Measured separately for each compartment between all the interior faces and the adjacent face and between interior faces and top and bottom planes of the mold.

5.4 *Mixer, Bowl and Paddl*e, an electrically driven mechanical mixer of the type equipped with paddle and mixing bowl, as specified in T 162.

5.5 *Flow Table and Flow Mol*d, conforming to the requirements of M 152.

5.6 *Tamper*, a non-absorptive, nonabrasive, non-brittle material such as a rubber compound having a Shore A durometer hardness of 80 ± 10 or seasoned oak wood rendered non-absorptive by immersion for 15 min in paraffin at approximately 392°F or (200°C), shall have a cross section of about 1/2 by 1 in. or (13 by 25 mm) and a convenient length of about 5 to 6 in. or (120 to 150 mm). The tamping face shall be flat and at right angles to the length of the tamper.

5.7 *Trowe*l, having a steel blade 4 to 6 in. (100 to 150 mm) in length, with straight edges.

5.8 *Moist Cabinet or Room,* conforming to the requirements of Specification M 201.

5.9 *Testing Machin*e, either the hydraulic or the screw type, with sufficient opening between the upper bearing surface and the lower bearing surface of the machine to permit the use of verifying apparatus. The load applied to the test specimen shall be indicated with an accuracy of ±1.0 %. If the load applied by the compression machine is registered on a dial, the dial shall be provided with a graduated scale that can be read to at least the nearest 0.1 % of the full scale load (Note 2). The dial shall be readable within 1 % of the indicated load at any given load level within the loading range. In no case shall the loading range of a dial be considered to include loads below the value that is 100 times the smallest change of load that can be read on the scale. The scale shall be provided with a graduation line equal to zero and so numbered. The dial pointer shall be of sufficient length to reach the graduation marks; the width of the end of the pointer shall not exceed the clear distance between the smallest graduations. Each dial shall be equipped with a zero adjustment that is easily accessible from the outside of the dial case, and with a suitable device that at all times until reset, will indicate to within 1 percent accuracy the maximum load applied to the specimen.

5.9.1 If the testing machine load is indicated in digital form, the numerical display must be large enough to be easily read. The numerical increment must be equal to or less than 0.10 percent of the full scale load of a given loading range. In no case shall the verified loading range include loads less than the minimum numerical increment multiplied by 100. The accuracy of the indicated load must be within 1.0 percent for any value displayed within the verified loading range. Provision must be made for adjusting to indicate true zero at zero load. There shall be provided a maximum load indicator that at all times until reset will indicate within 1 percent system accuracy the maximum load applied to the specimen.

Note 2: As close as can be read is considered 1/50 in. or (0.5 mm) along the arc described by the end of the pointer. Also, one half of the scale interval is about as close as can reasonably be read when the spacing on the load indicating mechanism is between 1/25 in. or (1 mm) and 1/16 in. or (1.6 mm). When the spacing is between 1/16 in. or (1.6 mm) and 1/8 in. or (3.2 mm), one third of the scale interval can be read with reasonable certainty. When the spacing is 1/8 in. or (3.2 mm) or more, one fourth of the scale interval can be read with reasonable certainty.

5.9.2 The upper bearing shall be a spherically seated, hardened metal block firmly attached at the center of the upper head of the machine. The center of the sphere shall lie at the center of the surface of the block in contact with the specimen. The block shall be closely held in its spherical seat, but shall be free to tilt in any direction. The diagonal or diameter (Note 3) of the bearing surface shall be only slightly greater than the diagonal of the face of the 2-in. or (50-mm) cube in order to facilitate accurate

centering of the specimen. A hardened metal bearing block shall be used beneath the specimen to minimize wear of the lower platen of the machine. The bearing block surfaces intended for contact with the specimen shall have a Rockwell hardness number not less than 60 HRC. These surfaces shall not depart from plane surfaces by more than 0.0005 in. or (0.013 mm) when the blocks are new and shall be maintained within a permissible variation of 0.001 in. or (0.025 mm).

Note 3: A diameter of $3^1/_8$ in. or (79 mm) provided that the lower bearing block has a diameter slightly greater than the diagonal of the face of the 2-in. or (50-mm) cube but not more than 2.9 in. or (74 mm), and is centered with respect to the upper bearing block and held in position by suitable means.

6. MATERIALS

6.1 *Graded Standard San*d:

6.1.1 The sand (Note 4) used for making test specimens shall be natural silica sand conforming to the requirements for graded standard sand in ASTM C 778.

Note 4: *Segregation of Graded Sand* — The graded standard sand should be handled in such a manner as to prevent segregation, since variations in the grading of the sand cause variations in the consistency of the mortar. In emptying bins or sacks, care should be exercised to prevent the formation of mounds of sand or craters in the sand, down the slopes of which the coarser particles will roll. Bins should be of sufficient size to permit these precautions. Devices for drawing the sand from bins by gravity should not be used.

7. TEMPERATURE AND HUMIDITY

7.1 *Temperature* — The temperature of the air in the vicinity of the mixing slab, the dry materials, molds, base plates, and mixing bowl, shall be maintained between 68 and 81.5°F or (20 and 27.5°C). The temperature of the mixing water, moist closet or moist room, and water in the storage tank shall be set at 73.5 °F or (23 °C) and shall not vary from this temperature by more than ±3°F or (±1.7°C).

7.2 *Humidity* — The relative humidity of the laboratory shall be not less than 50 percent. The moist closet or moist room shall conform to the requirements of M 201.

8. TEST SPECIMENS

8.1 Make two or three specimens from a batch of mortar for each period of test or test age.

9. PREPARATION OF SPECIMEN MOLDS

9.1 Apply a thin coating of release agent to the interior faces of the mold and non-absorptive base plates. Apply oils and greases using an impregnated cloth or other suitable means. Wipe the mold faces and the base plate with a cloth as necessary to remove any excess release agent and to achieve a thin, even coating on the interior surfaces. When using an aerosol lubricant, spray the release agent directly onto the mold faces and base plate from a distance of 6 to 8 in. or (150 to 200 mm) to achieve complete coverage. After spraying, wipe the surface with a cloth as necessary to remove any excess aerosol lubricant. The residue coating should be just sufficient to allow a distinct fingerprint to remain following light finger pressure (Note 5).

9.2 Seal the surfaces where the halves of the mold join by applying a coating of light cup grease such as petrolatum. The amount should be sufficient to extrude slightly when the two halves are tightened together. Remove any excess grease with a cloth.

9.3 After placing the mold on its base plate (and attaching, if clamp-type) carefully remove with a dry cloth any excess oil or grease from the surface of the mold and the base plate to which watertight sealant is to be applied. As a sealant, use paraffin, microcrystalline wax, or a mixture of three parts paraffin to five parts rosin by mass. Liquefy the sealant by heating between 230 and 248°F or (110 and 120°C). Effect a watertight seal by applying the liquefied sealant at the outside contact lines between the mold and its base plate.

Note 5: Because aerosol lubricants evaporate, molds should be checked for a sufficient coating of lubricant immediately prior to use. If an extended period of time has elapsed since treatment, retreatment may be necessary.

Note 6: *Watertight Molds* — The mixture of paraffin and rosin specified for sealing the joints between molds and base plates may be found difficult to remove when molds are being cleaned. Use of straight paraffin is permissible if a watertight joint is secured, but due to the low strength of paraffin it should be used only when the mold is not held to the base plate by the paraffin alone. A watertight joint may be secured with paraffin alone by slightly warming the mold and base plate before brushing the joint. Molds so treated should be allowed to return to the specified temperature before use.

10. PROCEDURE

Note: **For Field fabrication of grout cubes, follow WSDOT Test Method 813.**

10.1 *Composition of Mortar*s

10.1.1 The proportions of materials for the standard mortar shall be one part of cement to 2.75 parts of graded standard sand by mass. Use a water-cement ratio of 0.485 for all portland cements and 0.460 for all air-entraining portland cements. The amount of mixing water for other than portland and air-entraining portland cements shall be such as to produce a flow of 110 ± 5 as determined in accordance with Section 10.3 and shall be expressed as mass percent of cement.

10.1.2 The quantities of materials to be mixed at one time in the batch of mortar for making six and nine test specimens shall be as follows:

	Number of Specimens	
	6	**9**
Cement, g	500	740
Sand, g	1375	2035
Water, mL		
Portland (0.485)	242	359
Air-entraining portland (0.460)	230	340
Other (to flow of 110 ± 5)	—	—

10.2 *Preparation of Mortar*:

10.2.1 Mechanically mix in accordance with the procedure given in T 162.

10.3 *Determination of Flow*:

10.3.1 Carefully wipe the flow-table top clean and dry, and place the flow mold at the center. Place a layer of mortar about 1 in. or (25 mm) in thickness in the mold and tamp 20 times with the tamper. The tamping pressure shall be just sufficient to ensure uniform filling of the mold. Then fill the mold with mortar and tamp as specified for the first layer. Cut off the mortar to a plane surface, flush with the top of the mold, by drawing

the straight edge of a trowel (held nearly perpendicular to the mold) with a sawing motion across the top of the mold. Wipe the table top clean and dry, being especially careful to remove any water from around the edge of the flow mold. Lift the mold away from the mortar 1 min after completing the mixing operation. Immediately, drop the table through a height of 1/2 in. or (13 mm) 25 times in 15 seconds. Using the calipers, determine the flow by measuring the diameters of the mortar along the lines scribed in the table top, adding the four readings. The total of the four readings from the calipers equals the percent increase of the original diameter of the mortar.

10.3.2 For portland and air-entraining portland cements, merely record the flow.

10.3.3 In the case of cements other than portland or air-entraining portland cements, make trial mortars with varying percentages of water until the specified flow is obtained. Make each trial with fresh mortar.

10.4 *Molding Test Specimen*s:

10.4.1 Immediately following completion of the flow test, return the mortar from the flow table to the mixing bowl. Quickly scrape the bowl sides and transfer into the batch the mortar that may have collected on the side of the bowl and then remix the entire batch 15 seconds at medium speed. Upon completion of mixing, the mixing paddle shall be shaken to remove excess mortar into the mixing bowl.

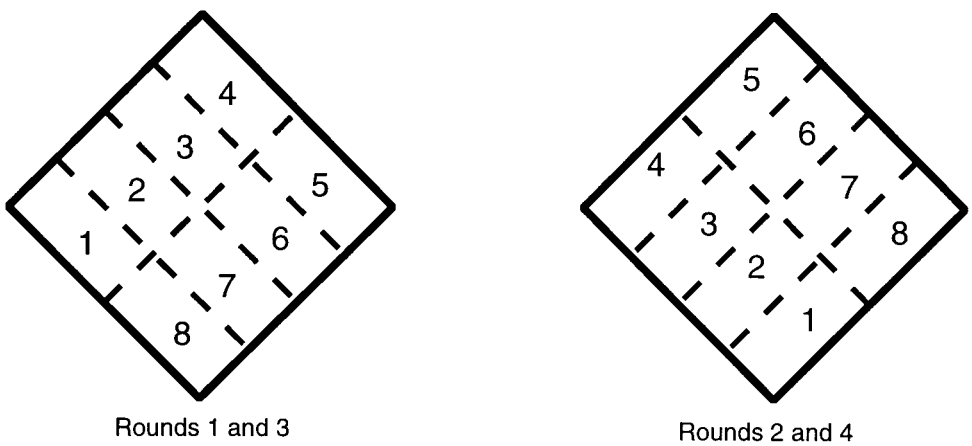

Order of Tamping in Molding of Test specimens
Figure 1

10.4.2 When a duplicate batch is to be made immediately for additional specimens, the flow test may be omitted and the mortar allowed to stand in the mixing bowl 90 seconds without covering. During the last 15 seconds of this interval, quickly scrape the bowl sides and transfer into the batch the mortar that may have collected on the side of the bowl. Then remix for 15 seconds at medium speed.

10.4.3 Start molding the specimens within a total elapsed time of not more than 2 min and 30 seconds after completion of the original mixing of the mortar batch. Place a layer of mortar about 1 in. or (25 mm) (approximately one half of the depth of the mold) in all of the cube compartments. Tamp the mortar in each cube compartment 32 times in about 10 seconds in 4 rounds, each round to be at right angles to the other and consisting of eight adjoining strokes over the surface of the specimen, as illustrated in Figure 1. The tamping pressure shall be just sufficient to ensure uniform filling of

the molds. The 4 rounds of tamping (32 strokes) of the mortar shall be completed in one cube before going to the next. When the tamping of the first layer in all of the cube compartments is completed, fill the compartments with the remaining mortar and then tamp as specified for the first layer. During tamping of the second layer bring in the mortar forced out onto the tops of the molds after each round of tamping by means of the gloved fingers and the tamper upon completion of each round and before starting the next round of tamping. On completion of the tamping, the tops of all cubes should extend slightly above the tops of the molds. Bring in the mortar that has been forced out onto the tops of the molds with a trowel and smooth off the cubes by drawing the flat side of the trowel (with the leading edge slightly raised) once across the top of each cube at right angles to the length of the mold. Then, for the purpose of leveling the mortar and making the mortar that protrudes above the top of the mold of more uniform thickness, draw the flat side of the trowel (with the leading edge slightly raised) lightly once along the length of the mold. Cut off the mortar to a plane surface flush with the top of the mold by drawing the straight edge of the trowel (held nearly perpendicular to the mold) with a sawing motion over the length of the mold.

10.5 *Storage of Test Specimens* — Immediately upon completion of molding, place the test specimens in the moist closet or moist room. Keep all test specimens, immediately after molding, in the molds on the base plates in the moist closet or moist room from 20 to 24 hrs with their upper surfaces exposed to the moist air but protected from dripping water. If the specimens are removed from the molds before 24 hrs, keep them on the shelves of the moist closet or moist room until they are 24 hrs old, and then immerse the specimens, except those for the 24-hr test, in saturated lime water in storage tanks constructed of non-corroding materials. Keep the storage water clean by changing as required.

10.6 *Determination of Compressive Strength*:

10.6.1 Test the specimens immediately after their removal from the moist closet in the case of 24 hrs specimens, and from storage water in the case of all other specimens. All test specimens for a given test age shall be broken within the permissible tolerance prescribed as follows:

Test Age	**Permissible Tolerance**
24 hrs	± 1 /2 hr
3 days	±1 hr
7 days	±3 hr
28 days	±12 hr

If more than one specimen at a time is removed from the moist closet for the 24-hr tests, keep these specimens covered with a damp cloth until time of testing. If more than one specimen at a time is removed from the storage water for testing, keep these specimens in water at a temperature of 73.4±3°F or (23 ±2°C) and of sufficient depth to completely immerse each specimen until time of testing.

10.6.2 Wipe each specimen to a surface-dry condition, and remove any loose sand grains or incrustations from the faces that will be in contact with the bearing blocks of the testing machine. Check these faces by applying a straightedge (Note 7). If there is appreciable curvature, grind the face or faces to plane surfaces or discard the specimen. A periodic check of the cross-sectional area of the specimens should be made.

Note 7: *Specimen Faces* — Results much lower than the true strength will be obtained by loading faces of the cube specimen that are not truly plane surfaces. Therefore, it is essential that specimen molds be kept scrupulously clean, as otherwise, large irregularities in the surfaces will occur. Instruments for cleaning molds should always be softer than the metal in the molds to prevent wear. In case grinding specimen faces is necessary, it can be accomplished best by rubbing the specimen on a sheet of fine emery paper or cloth glued to a plane surface, using only a moderate pressure. Such grinding is tedious for more than a few thousandths of an inch (hundredths of a millimeter); where more than this is found necessary, it is recommended that the specimen be discarded.

10.6.3 Apply the load to specimen faces that were in contact with the true plane surfaces of the mold. Carefully place the specimen in the testing machine below the center of the upper bearing block. Prior to the testing of each cube, it shall be ascertained that the spherically seated block is free to tilt. Use no cushioning or bedding materials. Bring the spherically seated block into uniform contact with the surface of the specimen. Apply the load rate at a relative rate of movement between the upper and lower platens corresponding to a loading on the specimen with the range of 200 to 400 lbs/s (900 to 1800 N/S). Obtain this designated rate of movement of the platen during the first half of the anticipated maximum load and make no adjustment in the rate of movement of the platen in the latter half of the loading especially while the cube is yielding before failure.

Table 2
Precision

		Test Age, Days	Coefficient of Variation IS Percent[A]	Acceptable Range of Test Results D2S PercentA
Portland Cements				
Constant Water-Cement Ratio:				
Single-lab		3	4.0	11.3
		7	3.6	10.2
	Av		3.8	10.7
Multi-lab		3	6.8	19.2
		7	6.4	18.1
	Av		6.6	18.7
Blended Cements				
Constant Flow Mortar:				
Single-lab		3	4.0	11.3
		7	3.8	10.7
		28	3.4	9.6
	Av		3.8	10.7
Multi-lab		3	7.8	22.1
		7	7.6	21.5
		28	7.4	20.9
	Av		7.6	21.5
Masonry Cements				
Constant Flow Mortar:				
Single-lab		7	7.9	22.3
		28	7.5	21.2
	Av		7.7	21.8
Multi-lab		7	11.8	33.4
		28	12.0	33.9
	Av		6.6	18.7

[A]These numbers represent, respectively, the (1S percent) and (D2S percent) limits as described in Practice C 670.

Note 8: It is advisable to apply only a very light coating of a good quality, light mineral oil to the spherical seat of the upper platen.

11. CALCULATION

11.1 Record the total maximum load indicated by the testing machine, and calculate the compressive strength as follows:

$$fm = P/A \quad (1)$$

where:

fm = compressive strength in psi or (MPa),
P = total maximum load in lbf or (N), and
A = area of loaded surface in 2 or (mm 2).

Either 2-in. or (50-mm) cube specimens may be used for the determination of compressive strength, whether inch-pound or SI units are used. However, consistent units for load and area must be used to calculate strength in the units selected. If the cross-sectional area of a specimen varies more than 1.5 percent from the nominal, use the actual area for the calculation of the compressive strength. The compressive strength of all acceptable test specimens (see Section 12) made from the same sample and tested at the same period shall be averaged and reported to the nearest 10 psi (0.1 MPa).

12. REPORT

12.1 Report the flow to the nearest 1 percent and the water used to the nearest 0.1 percent. Average compressive strength of all specimens from the same sample shall be reported to the nearest 10 psi (0.1 MPa).

13. FAULTY SPECIMENS AND RETESTS

13.1 In determining the compressive strength, do not consider specimens that are manifestly faulty.

13.2 The maximum permissible range between specimens from the same mortar batch, at the same test age is 8.7 percent of the average when three cubes represent a test age and 7.6 percent when two cubes represent a test age (Note 9).

Note 9: The probability of exceeding these ranges is 1 in 100 when the within-batch coefficient of variation is 2.1 percent. The 2.1 percent is an average for laboratories participating in the portland cement and masonry cement reference sample programs of the Cement and Concrete Reference Laboratory.

13.3 If the range of three specimens exceeds the maximum in 13.2, discard the result which differs most from the average and check the range of the remaining two specimens. Make a retest of the sample if less than two specimens remain after discarding faulty specimens or discarding tests that fail to comply with the maximum permissible range of two specimens.

Note 10: Reliable strength results depend upon careful observance of all of the specified requirements and procedures. Erratic results at a given test period indicate that some of the requirements and procedures have not been carefully observed; for example, those covering the testing of the specimens as prescribed in 10.6.2 and 10.6.3. Improper centering of specimens resulting in oblique fractures or lateral movement of one of the heads of the testing machine during loading will cause lower strength results.

14. PRECISION AND BIAS

14.1 *Precision* — The precision statements for this test method are listed in Table 2 and are based on results from the Cement and Concrete Reference Laboratory Reference Sample Program. They are developed from data where a test result is the average of compressive strength tests of three cubes molded from a single batch of mortar and tested at the same age. A significant change in precision will not be noted when a test result is the average of two cubes rather than three.

14.2 These precision statements are applicable to mortars made with cements mixed, and tested at the ages as noted. The appropriate limits are likely, somewhat larger for tests at younger ages and slightly smaller for tests at older ages.

14.3 *Bias* — The procedure in this test method has no bias because the value of compressive strength is defined in terms of the test method.

15. KEYWORDS

15.1 Compressive strength; hydraulic cement mortar; hydraulic cement strength; mortar strength; strength

Performance Exam Checklist

Compressive Strength of Hydraulic Cement Mortar for AASHTO T 106

Participant Name _____ Exam Date _____

Procedure Element	Yes	No
1. Cubes are broken within permissible tolerance for time?	_____	_____
2. Cubes tested immediately after removal from moist closet?	_____	_____
3. Specimens covered with damp cloth while out of moist room closet?	_____	_____
4. Cubes wiped clean of sand, and wiped to surface dry condition prior to testing?	_____	_____
5. Faces to contact the bearing blocks are those that were in contact with the mold?	_____	_____
6. Faces that will contact the bearing blocks checked with a straightedge?	_____	_____
7. Cross-sectional area determined in respect to those faces contacting the bearing blocks?	_____	_____
8. Prior to testing each cube, the spherically seated block was checked for freedom to tilt?	_____	_____
9. Load rate of 200 to 400 lbf/s (900-1800 N/s) obtained during the first half of the anticipated load?	_____	_____
10. No adjustment in rate was made during the second half of the loading?	_____	_____

Procedure Element	**Yes**	**No**
11. Compressive strength of cubes averaged and reported to the nearest 10 psi (0.1 MPa)?	_____	_____

Comments: First attempt: Pass ☐ Fail ☐ Second attempt: Pass ☐ Fail ☐

_____

_____

_____

_____

_____

_____

_____

_____

Date: _____ Tech. ID Code: _____ Insp. ID Code: _____

WSDOT FOP for AASHTO T 119[1]

Standard Test Method for Slump of Hydraulic-Cement Concrete

1. SCOPE

1.1 This test method covers determination of slump of concrete, both in the laboratory and in the field.

1.2 The values stated in English units are to be regarded as the standard.

1.3 *This standard does not purport to address all of the safety problems, if any, associated with its use. It is the responsibility of the user of this standard to establish appropriate safety and health practices and determine the applicability of regulatory limitations prior to use.*

1.4 The text of this standard references notes and footnotes which provide explanatory material. These notes and footnotes (excluding those in tables and figures) shall not be considered as requirements of the standard.

2. REFERENCED DOCUMENTS

2.1 *AASHTO Standards:*

T 141 Sampling Freshly Mixed Concrete

2.2 *ASTM Standards:*

C 172 Practice for Sampling Freshly Mixed Concrete

3. SUMMARY OF TEST METHOD

3.1 A sample of freshly mixed concrete is placed and compacted by rodding in a mold shaped as the frustum of a cone. The mold is raised, and the concrete allowed to subside. The distance between the original and displaced position of the center of the top surface of the concrete is measured and reported as the slump of the concrete.

4. SIGNIFICANCE AND USE

4.1 This test method is intended to provide the user with a procedure to determine slump of plastic hydraulic-cement concretes.

Note 1: This test method was originally developed to provide a technique to monitor the consistency of unhardened concrete. Under laboratory conditions, with strict control of all concrete materials, the slump is generally found to increase proportionally with the water content of a given concrete mixture, and thus to be inversely related to concrete strength. Under field conditions, however, such a strength relationship is not clearly and consistently shown. Care should therefore be taken in relating slump results obtained under field conditions to strength.

4.2 This test method is considered applicable to plastic concrete having coarse aggregate up to $1^1/_2$ in. (37.5 mm) in size. If the coarse aggregate is larger than $1^1/_2$ in. (37.5 mm) in size, the test method is applicable when it is performed on the fraction of concrete passing a $1^1/_2$-in. (37.5-mm) sieve, with the larger aggregate being removed in accordance with the section titled "Additional Procedure for Large Maximum Size Aggregate Concrete" in Practice T 141.

4.3 This test method is not considered applicable to non-plastic and non-cohesive concrete.

[1]This FOP is based on AASHTO T 119-99.

5. APPARATUS

5.1 Mold — The test specimen shall be formed in a mold made of metal not readily attacked by the cement paste. The metal shall not be thinner than 0.060 in. (1.5 mm) and if formed by the spinning process, there shall be no point on the mold at which the thickness is less than 0.045 in. (1.15 mm). The mold shall be in the form of the lateral surface of the frustum of a cone with the base 8 in. (200 mm) in diameter, the top 4 in. (100 mm) in diameter, and the height 12 in. (300 mm). Individual diameters and heights shall be within ± 1/8 in. (3.2 mm) of the prescribed dimensions. The base and the top shall be open and parallel to each other and at right angles to the axis of the cone. The mold shall be provided with foot pieces and handles similar to those shown in Figure 1. The mold shall be constructed without a seam. The interior of the mold shall be relatively smooth and free from projections. The mold shall be free from dents, deformation or adhered mortar. A mold which clamps to a nonabsorbent base plate is acceptable instead of the one illustrated provided the clamping arrangement is such that it can be fully released without movement of the mold and the base is large enough to contain all of the slumped concrete in an acceptable test.

5.1.1 Mold with alternative materials.

5.1.1.1 Molds other than metal are permitted if the following requirements are met: The mold shall meet the dimensional requirements of 5.1. The mold shall be sufficiently rigid to maintain the specified dimensions and tolerances during use, resistant to impact forces, and shall be nonabsorbent. The mold shall be demonstrated to provide test results comparable to those obtained when using a metal mold meeting the requirements of 5.1. Comparability shall be demonstrated on behalf of the manufacturer by an independent testing laboratory . Test for comparability shall consist of not less than 10 individual comparisons performed at each of 3 different slumps ranging from 2 in. (50 mm) to 6 in. (150 mm). No individual test results shall vary by more than 0.50 in. (15 mm) from that obtained using the metal mold. The average test results of each slump range obtained using the mold constructed of alternative material shall not vary by more than 0.30 in. (10 mm) from the average of test results obtained using the metal mold. If any changes in material or method of manufacture are made, tests for comparability shall be repeated.

5.1.1.2 If the condition of any individual mold is suspected of being out of tolerance from the as manufactured condition, a single comparative test shall be performed. If the test results differ by more than 0.50 in. (15 mm) from that obtained using the metal mold, the mold shall be removed from service.

5.2 Tamping Rod — ºThe tamping rod shall be a round, straight steel rod 5/8 in. (16 mm) in diameter and approximately 24 in. (600 mm in length, having the tamping end or both ends rounded to a hemispherical tip, the diameter of which is 5/8 in. (16 mm).

5.3 Torpedo leve.

5.4 Base — Flat, nonabsorbent, rigid surface.

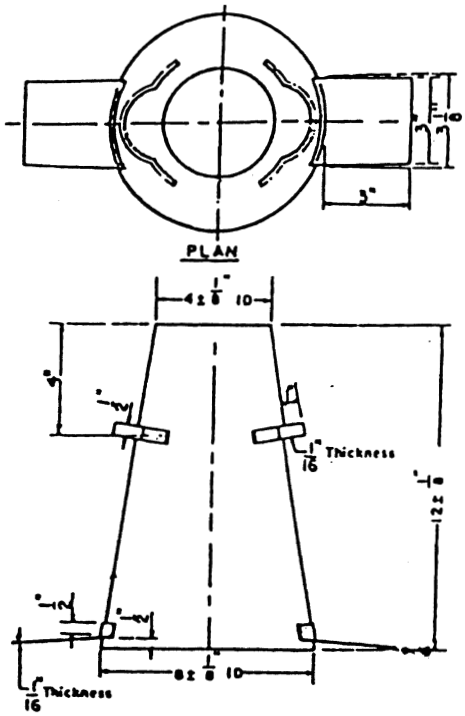

Metric Equivalents										
mm	1.6	3.2	12.7	25.4	38.1	76.2	79.4	102	203	305
in.	1/16	1/2	1/2	1	1 1/2	3	3 1/8	4	8	12

Metric Equivalents										
mm	1.6	3.2	12.7	25.4	38.1	76.2	79.4	102	203	305
in.	1/16	1/8	1/2	1	1 1/3	3	3 1/8	4	8	12

Mold for Slump Test
Figure 1

6. SAMPLE

6.1 The sample of concrete from which test specimens are made shall be representative of the entire batch. It shall be obtained in accordance with FOP for WAQTC TM 2.

7. PROCEDURE

7.1 Dampen the mold and place it on a firm, flat, nonabsorbent, level surface. It shall be held firmly in place during filling by the operator standing on the two foot pieces. From the sample of concrete obtained in accordance with Section 6, immediately fill the mold in three layers, each approximately one third the volume of the mold.

Note 3: One third of the volume of the slump mold fills it to a depth of 2 5/8 in. (67 mm); two thirds of the volume fills it to a depth of 6 1/8 in. (155 mm).

7.2 Rod each layer with 25 strokes of the tamping rod. Uniformly distribute the strokes over the cross section of each layer. For the bottom layer this will necessitate inclining the rod slightly and making approximately half of the strokes near the perimeter, and then progressing with vertical strokes spirally toward the center. Rod the bottom layer throughout its depth. Rod the second layer and the top layer each throughout its depth, so that the strokes just penetrate into the underlying layer.

7.3 In filling and rodding the top layer, heap the concrete above the mold before rodding is started. If the rodding operation results in subsidence of the concrete below the top edge of the mold, add additional concrete to keep an excess of concrete above the top of the mold at all times. After the top layer has been rodded, strike off the surface of the concrete by means of a screeding and rolling motion of the tamping rod.

Remove the mold immediately from the concrete by raising it carefully in a vertical direction. Raise the mold a distance of approximately 12 in. (300 mm) in 5 ± 2 seconds by a steady upward lift with no lateral or torsional motion. Complete the entire test from the start of the filling through removal of the mold without interruption and complete it within an elapsed time of $2^1/_2$ min.

7.4 Immediately measure the slump by determining the vertical difference between the top of the mold and the displaced original center of the top surface of the specimen. If a decided falling away or shearing off of concrete from one side or portion of the mass occurs (Note 4), disregard the test and make a new test on another portion of the sample.

Note 4: If two consecutive tests on a sample of concrete show a falling away or shearing off of a portion of the concrete from the mass of the specimen, the concrete probably lacks necessary plasticity and cohesiveness for the slump test to be applicable.

8. Report

8.1 Report the slump in terms of inches (millimeters) to the nearest $^1/_4$ in. (5 mm) of subsidence of the specimen during the test ~~as follows:~~

~~Slump = 12 inches of height after subsidence~~

~~Slump = 300 mm of height after subsidence~~

Report results on concrete delivery ticket (i.e., Certificate of Compliance).

Performance Exam Checklist

Slump of Hydraulic Cement Concrete
FOP for AASHTO T 119

Participant Name _____ Exam Date _____

Procedure Element	Yes	No
1. Cone and floor or base plate dampened?	_____	_____
2. Cone held firmly against the base by standing on the two foot pieces? Cone not allowed to move in any way during filling?	_____	_____
3. Representative samples scooped into the cone?	_____	_____
4. Cone filled in three approximately equal layers (by volume), the first to a depth of $2^5/_8$ in. (67 mm), the second to a depth of $6^1/_8$ in. (155 mm), and the third to just over the top of the cone?	_____	_____
5. Each layer rodded throughout its depth 25 times with hemispherical end of rod, uniformly distributing strokes?	_____	_____
6. Middle and top layers rodded to just penetrate into the underlying layer?	_____	_____
7. When rodding the top layer, excess concrete kept above the mold at all times?	_____	_____
8. Concrete struck off level with top of cone using tamping rod?	_____	_____
9. Cone lifted upward approximately 12 in. (300 mm) in one smooth motion, without twisting the cone, in 5 ± 2 seconds?	_____	_____
10. Slump measured to the nearest $^1/_4$ in. (5 mm) from the top of the cone to the displaced original center of the top surface of the specimen?	_____	_____
11. Test performed from start to finish within $2^1/_2$ minutes?	_____	_____

Comments: First attempt: Pass ☐ Fail ☐ Second attempt: Pass ☐ Fail ☐

_____

_____

_____

_____

_____

_____

_____

_____

_____

_____

WSDOT Test Method No. 123

Method of Test for Bark Mulch

1. SCOPE

   a. This method covers a procedure for determining the sieve analysis and material finer than 1/4 in. (6.3 mm) using a loose volume bucket.

2. EQUIPMENT

   a. A mechanical sieve shaker.

   b. Sieves — A 1 1/2 in. (37.5 mm) and No. 4 (4.75 mm) sieves conforming to the requirements of AASHTO M-92. Breaker sieves may be used.

   c. Volume Bucket — A container calibrated in 1 gal. (1 L) increments from 1 to 5 gal. (1 to 20 L). A 5-gal. bucket may be used when calibrated as follows:

      On a level surface calibrate the container by gradually filling it with water in 1 gal. (1 L) increments. Mark the inner wall of the container after the addition of each liter.

3. PROCEDURE

   a. Air dry (140°F (60°C) max.) the sample for 15 hours, ± 4 hours.

   b. Reduce the sample to testing size per the FOP for AASHTO T 248.

   c. Place the sample in the volume bucket and record the volume as the total volume.

   d. Shake the sample over the 1 1/2 in. (37.5 mm) and No. 4 (4.75 mm) sieves. Using breaker sieves inserted between the two specified sieves so the No. 4 (4.75 mm) sieve will not be **overloaded**. Use caution to avoid over sieving as the wood material breaks down.

   e. The material retained on the 1 1/2 in. (37.5 mm) sieve is measured in the volume bucket and recorded.

   f. The material on the breaker sieves is added to the material retained on the No. 4 (4.75 mm) sieve and the volume measured in the volume bucket and recorded.

   g. The percent passing is calculated as follows:

$$100 - \frac{(\text{Volume on sieve} \times 100)}{\text{Total Volume}} = \%\,\text{passing}$$

Performance Exam Checklist

Method of Test for Bark Mulch
WSDOT T 123

Participant Name _____ Exam Date _____

Procedure Element	Yes	No
1. Bark mulch sample dried @ 140°F (60°C)?	_____	_____
2. Five (5) gallon bucket calibrated in 1 gal. (1 L) increments?	_____	_____
3. Sample quartered or split and placed in calibrated bucket?	_____	_____
4. Volume of sample in bucket recorded as total volume?	_____	_____
5. Sample screened in the Gilson shaker through $1^1/_2$ in. (37.5 mm) screen, breaker screens and $^1/_4$ in. (6.3 mm) screen?	_____	_____
6. Do not over shake to prevent degrading of sample?	_____	_____
7. Remove $1^1/_2$ in. (37.5 mm) screen and damp material in calibrated bucket and record volume as volume on $1^1/_2$ in. (37.5 mm) screen?	_____	_____
8. Place all breaker screen material down to $^1/_4$ in. (6.3 mm) screen in bucket and record volume as volume on $^1/_4$ in. (6.3 mm) screen?	_____	_____
9. Calculate:		
% passing $1^1/_2$ in. (37.5 mm) = $100 - \frac{(\text{volume on } 1^1/_2 \text{ in. (37.5 mm) screen x } 100)}{\text{Total Volume}}$	_____	_____
% passing $^1/_4$ in. (6.3 mm) = $100 - \frac{(\text{volume on } ^1/_4 \text{ in. (6.3 mm) screen x } 100)}{\text{Total Volume}}$	_____	_____
10. Report results?	_____	_____

Comments: First attempt: Pass ☐ Fail ☐ Second attempt: Pass ☐ Fail ☐

_____

_____

_____

_____

_____

_____

_____

_____

_____

_____

Signature of Examiner _____

AIR CONTENT OF FRESHLY MIXED CONCRETE BY THE PRESSURE METHOD FOP FOR AASHTO T 152

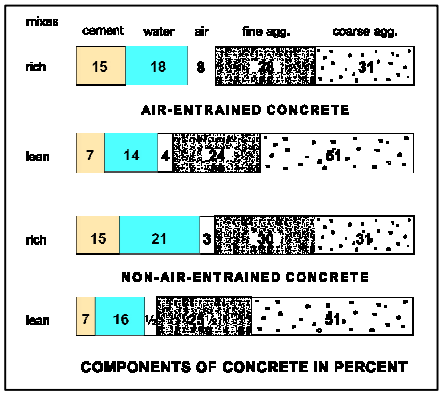

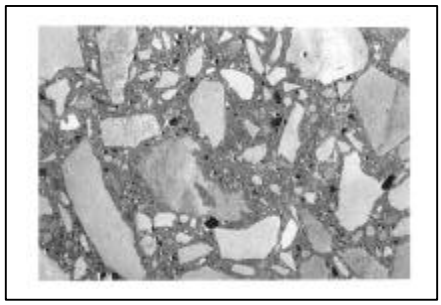

Air Voids

Significance

Concrete is not a solid, but rather a solid with void spaces. The voids may contain gas such as air, or liquid, such as water. All concrete contains air voids, and the amount can be increased by the addition of an air entraining agent to the mix. When such an agent is used, the size of the voids drastically decreases and the number of voids greatly increases, providing a much greater dispersal of voids.

Air entrainment is necessary in concrete that will be saturated and exposed to cycles of freezing and thawing, and to deicing chemicals. The microscopic entrained air voids provide a site for relief of internal pressure that develops as water freezes and thaws inside the concrete. Without the proper entrained-air content, normal concrete that is saturated and is exposed to cycles of freezing and thawing can fail prematurely by scaling, spalling, or cracking.

Care must be taken, however, not to have too much entrained air. As the air content increases, there will be a corresponding reduction in the strength and other desirable properties of the concrete. Typically, this strength reduction will be on the order of 3 to 5 percent for each 1 percent of air content above the mix design value. Concrete proportioned for 5 percent air, for example, will be approximately 15 to 25 percent lower in strength if the air content were to double.

Scope

This procedure covers determination of the air content in freshly mixed portland cement concrete containing dense aggregates in accordance with AASHTO T 152. It is not for use with lightweight or highly porous aggregates. This procedure includes calibration of the air meter gauge, and two methods for calibrating the gauge are presented.

Apparatus

Apparatus

08

- Air meter: Type B, as described in AASHTO T 152
- Balance or scale: Accurate to 0.3 percent of the test load at any point within the range of use (for Method 1 calibration only)
- Tamping rod: 5/8 in. (16 mm) diameter and approximately 24 in. (600 mm) long, having a hemispherical tip. (Hemispherical means half a sphere; the tip is rounded like half of a ball.)
- Vibrator: 7000 vibrations per minute, 0.75 to 1.50 in. (19 to 38 mm) in diameter, at least 3 in. (75 mm) longer than the section being vibrated for use with low slump concrete
- Scoop
- Container for water: rubber syringe (may also be a squeeze bottle)
- Strike-off bar: Approximately 12 in. x 3/4 in. x 1/8 in. (300 mm x 22 mm x 3 mm).
- Strike-off Plate: A flat rectangular metal plate at least 1/4 in. (6 mm) thick or a glass or acrylic plate at least 1/2 in. (12 mm) thick, with a length and width at least 2 in. (50 mm) greater than the diameter of the measure with which it is to be used. The edges of the plate shall be straight and smooth within tolerance of 1/16 in. (1.5 mm).

  Note 1: Use either the strike-off bar or strike-off plate; both are not required.

- Mallet: With a rubber or rawhide head having a mass of 1.25 ±0.5 lb (0.57 ±0.23 kg)

Calibration of Air Meter Gauge

09

Note 2: There are two methods for calibrating the air meter. They are different only in the means by which the water removed from the gauge in Step 8 is measured. Method 1 relies on a mass measurement, while Method 2 relies on a volume measurement.

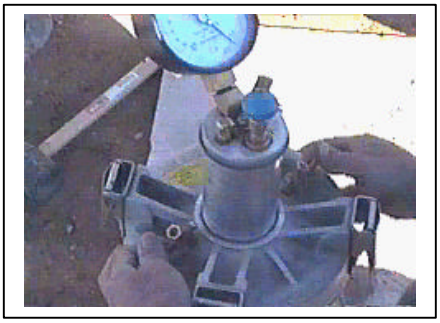

Meter cover with petcocks

Gauge reading zero

1. Determine the mass of the dry, empty air meter base and cover assembly (Method 1 only).
2. Fill the base nearly full with water.
3. Screw the short piece of straight tubing into the threaded petcock hole on the underside of the cover, and clamp the cover on the base with the tube extending down into the water.
4. Add water through the petcock having the pipe extension below until all air is forced out the other petcock. Rock the meter slightly until all air is expelled through the petcock.
5. Wipe off the air meter base and cover assembly, and determine the mass of the filled unit (Method 1 only).
6. Pump up the air pressure to a little beyond the predetermined initial pressure indicated on the gauge. Wait a few seconds for the compressed air to cool, and then stabilize the gauge hand at the proper initial pressure by pumping up or relieving pressure, as needed.
7. Close both petcocks and immediately open the main air valve exhausting air into the base. Wait a few seconds until the meter needle stabilizes. The gauge should now read 0 percent. If two or more tests show a consistent variation from 0 percent in the result, change the initial pressure line to compensate for the variation, and use the newly established initial pressure line for subsequent tests.
8. Remove 5 percent of water in the base of the air meter. There are ~~two~~ <u>three</u> methods for doing this.

   Method 1:

   - Determine the mass of the water in the base by subtracting the mass found in Step 1 from the mass found in Step 5. Multiply this value by 0.05. This is the mass of the water that must be removed.
   - Remove water until the mass of the air meter base, lid assembly, and water has been reduced by the mass of the water that must be removed.

Method 2:

- Knowing the volume of the air meter, calculate 5 percent of this volume, by multiplying it by 0.05. This is the volume of the water that must be removed.
- Remove water from the air meter equal to the volume calculated above.

15

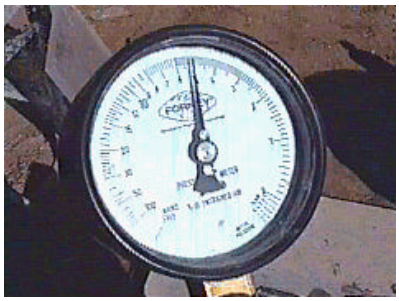

Air meter gauge

Note 3: A calibration vessel(s) of known volume that are used for this purpose. Calibration vessel(s) should be brass, not plastic, and must be protected from crushing or denting.

If a calibration vessel is used, confirm what percentage volume it represents for the air meter being used. Vessels commonly represent 5 percent volume, but they are for specific size meters.

Place the calibration vessel upright at the bottom of the pressure meter base. It is best to place the calibration vessel after the base is filled with water. Keep the calibration vessel upright. Place the cover on the base, latch, top off the meter with water, and continue to operate the meter as in a normal test.

Using two calibration vessels will allow checking twice the air content. The small hole at the bottom of the calibration vessel must be kept unobstructed. A very small amount of water may be left in the vessel after a test, but shake it out before making another test.

16

9. Pump up the air pressure to a little beyond the predetermined initial pressure indicated on the gauge. Wait a few seconds for the compressed air to cool, and then stabilize the gauge hand at the proper initial pressure by pumping up or relieving pressure, as needed.

10. Close both petcocks and immediately open the main air valve exhausting air into the base. Wait a few seconds until the meter needle is stabilized. The gauge should now read 5.0 ± 0.1 percent. If the gauge is outside that range, the meter needs adjustment. The adjustment could involve adjusting the starting point so that the gauge reads ~~5.0 ±0.1~~ 5.0 ± 02 percent when this calibration is run, or could involve moving the gauge needle to read 5.0 percent. Any adjustment should comply with the manufacturer's recommendations.

11. When the gauge hand reads correctly at 5.0 percent, additional water may be withdrawn in the same manner to check the results at other values such as 10 percent or 15 percent.

Note 4: Calibration shall be performed at the frequency required by the agency. Record the date of the calibration, the calibration results, and the name of the technician performing the calibration in the log book kept with each air meter.

Note 5: Remove the extension tubing from threaded petcock hole in the underside of the cover before starting the test procedure.

Method 3:

- Screw the curved tube supplied with the air meter into the outer end of the petcock and, by pressing on the thumb lever and controlling flow with the petcock lever, fill the 5 percent calibrating vessel (345 ml) level full of water from the base.

- Release the air at the free petcock. Open the other petcock and let the water in the curved pipe run back into the base. There is now 5 percent air in the base.
- With petcocks open, pump air pressure in the exact manner as outlined in step 6 above. Close petcocks and immediately press the thumb lever. Wait a few seconds for exhaust air to warm to normal temperature, and for the needle to stabilize. The dial should now read 5 percent.
- If two or more consistent tests show that the gauge reads incorrectly at 5percent by more than +0.2 percent, then remove the gauge glass and reset the dial hand to 5 percent.
- When the gauge hand reads correctly at 5 percent, additional water may be withdrawn in the same manner to check the results at 10 percent, 15 percent, and 20 percent.
- Remove the extension tubing from threaded petcock hole before starting tests on concrete.
- The above calibration procedure shall be performed at least at six-month intervals, at the start of a project, or weekly when meter is used during concrete placement.
- Record the date of the calibration, the calibration results, and the name of the technician performing the calibration in the log book kept with each air meter.

Procedure - General

17 ***Note 6:*** There are two methods of consolidating the concrete – rodding and internal vibration. If the slump is greater than 3 in. (75 mm), consolidation is by rodding. When the slump is 1 to 3 in. (25 to 75 mm), internal vibration or rodding can be used to consolidate the sample, but the method used must be that required by the agency in order to obtain consistent, comparable results. For slumps less than 1 in. (25 mm), consolidate the sample by internal vibration. The internal vibration procedure follows this general procedure.

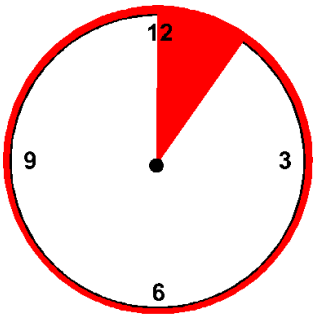

5 Minutes!

18

1. Obtain the sample in accordance with the FOP for WAQTC TM 2. <u>With concrete using 1½ in. (37.5mm) or larger aggregate, the 1½ in. (37.5mm) aggregate must be removed.</u>

   Note 7: Testing shall begin within five minutes of obtaining the sample.

2. Dampen the inside of the air meter base.
3. Fill the base approximately 1/3 full with concrete.

Consolidation

19 20

4. Consolidate the layer with 25 strokes of the tamping rod, using the rounded end. Distribute the strokes evenly over the entire cross section of the concrete. Rod throughout its depth without hitting the bottom too hard.
5. Tap the sides of the base smartly 10 to 15 times with the mallet to close voids and release trapped air.

21

6. Add the second layer, filling the base about 2/3 full.
7. Consolidate this layer with 25 strokes of the tamping rod, penetrating about 1 in. (25 mm) into the bottom layer.

Tapping measure

8. Tap the sides of the base 10 to 15 times with the mallet.
9. Add the final layer, slightly overfilling the base.
10. Consolidate this layer with 25 strokes of the tamping rod, penetrating about 1 in. (25 mm) into the second layer.
11. Tap the sides of the base smartly 10 to 15 times with the mallet.

    Note 8: The base should be slightly over full, about 1/8 in. (3 mm) above the rim. If there is a great excess of concrete, remove a portion with the scoop. If the base is under full, add a small quantity. This adjustment may be done only after consolidating the final layer and before striking off the surface of the concrete.

12. Strike off the surface of the concrete and finish it smoothly with a sawing action of the strike-off bar or plate, using great care to leave the base just full. The surface should be smooth and free of voids.

22

13. Clean the top flange of the base to ensure a proper seal.

23

Strike off

14. Moisten the inside of the cover and check to see that both petcocks are open and the main air valve is closed.
15. Clamp the cover on the base.
16. Inject water through the funneled petcock until water emerges from the second petcock.
17. Jar the air meter gently until no air bubbles appear to be coming out of the second petcock.
18. Close the air bleeder valve and pump air into the air chamber until the needle goes past the starting point. Allow a few seconds for the compressed air to cool.

24

19. Tap the gauge gently with one hand while slowly opening the air bleeder valve until the needle rests on the initial starting point. Close the air bleeder valve.
20. Close both petcocks.
21. Open the main air valve.
22. Tap the sides of the base smartly with the mallet.

Tapping air meter gauge

23. Lightly tap the gauge to settle the needle, and then read the air content to the nearest 0.1 percent.
24. Close the main air valve.
25. Open both petcocks to release pressure, remove the concrete, and thoroughly clean the cover and base with clean water.
26. Open the main air valve to relieve the pressure in the air chamber.

Procedure - Internal Vibration

27. Perform Steps 1 and 2 in the general procedure.
2. Fill the base approximately half full.
3. Insert the vibrator at three different points. Do not let the vibrator touch the bottom or sides of the base.

   Note 9: Remove the vibrator slowly, so that no air pockets are left in the material.

   Note 10: Continue vibration only long enough to achieve proper consolidation of the concrete. Over vibration may cause segregation and loss of appreciable quantities of intentionally entrained air.

28. Fill the base a bit over full.
5. Insert the vibrator as in Step 3. Do not let the vibrator touch the sides of the base, and penetrate the first layer approximately 25 mm (1 in.).
6. Return to Step 11 of the general procedure and continue.

Report

29 Results shall be reported on standard forms approved for use by the agency. Record the percent of air to the nearest 0.1 percent.

Report results on concrete delivery ticket, (i.e. Certificate of Compliance).

Note 11: Some agencies require an aggregate correction factor in order to determine total percent entrained air.

Aggregate Correction Factor

WSDOT requires the use of an aggregate correction factor to determine the total percent entrained air as follows:

$$A_s = A_1 - G$$

A_s = Air content of sample tested, percent
A_1 = Apparent air content of sample tested, percent
G = Aggregate correction factor from the mix design, percent

Tips!

30

- Start within 5 minutes of obtaining sample.
- Use a calibrated air meter.
- Protect the calibration vessel from damage.
- Consolidation technique depends on slump. Rodding and/or vibration may be appropriate for different slumps.

31

Performance Exam Checklist

Air Content of Freshly Mixed Concrete by the Pressure Method
FOP for AASHTO T 152

Participant Name _____ Exam Date _____

Procedure Element	**Yes**	**No**
1. Representative sample selected?	_____	_____
2. Container filled in three equal layers, slightly overfilling the last layer?	_____	_____
3. Each layer rodded throughout its depth 25 times with hemispherical end of rod, uniformly distributing strokes?	_____	_____
4. Bottom layer rodded throughout its depth, without forcibly striking the bottom of the container?	_____	_____
5. Middle and top layers rodded, each throughout their depths and penetrating 1 in. (25 mm) into the underlying layer?	_____	_____
6. Sides of the container tapped 10 to 15 times with the mallet after rodding each layer?	_____	_____
7. Concrete struck off level with top of container using the bar and rim cleaned off?	_____	_____
8. Inside of cover cleaned and moistened before clamping to base?	_____	_____
Using a Type B Meter		
9. Both petcocks open?	_____	_____
10. Air valve closed between air chamber and the bowl?	_____	_____
11. Water injected through petcock until it flows out the other petcock?	_____	_____
12. Water injection into the petcock continued while jarring and tapping the meter to insure all air is expelled?	_____	_____
13. Air pumped up to initial pressure line?	_____	_____
14. A few seconds allowed for the compressed air to stabilize?	_____	_____
15. Gauge adjusted to the initial pressure?	_____	_____
16. Both petcocks closed?	_____	_____
17. Air valve opened between chamber and bowl?	_____	_____
18. Sides of bowl tapped with the mallet?	_____	_____

Procedure Element	Yes	No
19. Air percentage read after lightly tapping the gauge to stabilize the hand?	_____	_____
20. Air valve closed and then petcocks opened to release pressure before removing the cover?	_____	_____
21. Air content recorded to 0.1 percent?	_____	_____

Comments: First attempt: Pass ☐ Fail ☐ Second attempt: Pass ☐ Fail ☐

_____

_____

_____

_____

_____

_____

_____

_____

_____

_____

Signature of Examiner _____

This checklist is derived, in part, from copyrighted material printed in ACI CP-1, published by the American Concrete Institute.

WSDOT Test Method of Test for AASHTO T 166[1]

Bulk Specific Gravity of Compacted Bituminous Mixtures Using Saturated Surface-Dry Specimens

1. SCOPE

1.1 This method of test covers the determination of bulk specific gravity of specimens of compacted bituminous mixtures as defined in M 132, Terms Relating to Density and Specific Gravity of Solids, Liquids, and Gases.

~~1.2 This method should not be used with samples that contain open or inter-connecting voids and/or absorb more than 2 percent of water by volume, as determined in Sections 5.2 or 8.2 herein.~~

1.3 The bulk specific gravity of the compacted bituminous mixtures may be used in calculating the unit mass of the mixture.

1.4 The values stated in English units are to be regarded as the standard.

Note: Method A shall be used for laboratory compacted samples, and field samples from the gyratory compactor.

Method C shall be used for cores.

2. TEST SPECIMENS

2.1 Test specimens may be either laboratory-molded bituminous mixtures or from bituminous pavements. The mixtures may be surface or wearing course, binder or leveling course, or hot-mix base.

2.2 *Size of Specimens* — It is recommended that: (1) the diameter of cylindrically molded or cored specimens, or the length of the sides of sawed specimens, be at least equal to four times the maximum size of the aggregate; and (2) the thickness of specimens be at least one-and-one-half times the maximum size of the aggregate.

2.3 Pavement specimens shall be taken from pavements with core drill, diamond or carborundum saw, or by other suitable means.

2.4 Care shall be taken to avoid distortion, bending, or cracking of specimens during and after the removal from pavement or mold. Specimens shall be stored in a safe, cool place.

2.5 Specimens shall be free from foreign materials such as seal coat, tack coat, foundation material, soil, paper, or foil.

2.6 If desired, specimens may be separated from other pavement layers by sawing or other suitable means. Care should be exercised to ensure sawing does not damage specimens.

[1]This Test Method is based on AASHTO T 166-00.

METHOD A

3. APPARATUS

3.1 *Weighing Device* — The weighing device shall have sufficient capacity, be readable to 0.1 percent of the sample mass, or better, and conform to the requirements of M 231. The weighing device shall be equipped with suitable suspension apparatus and holder to permit weighing the specimen while suspended from the center of scale pan of weighing device.

3.2 *Suspension Apparatus* — wire suspending the container shall be the smallest practical size to minimize any possible effects of a variable immersed length. The suspension apparatus shall be constructed to enable the container to be immersed to a depth sufficient to cover it and the test sample during weighing. Care should be taken to ensure no trapped air bubbles exist under the specimen.

3.3 *Water Bath* — for immersing the specimen in water while suspended under the weighing device, equipped with an overflow outlet for maintaining a constant water level.

4. PROCEDURE

4.1 Dry the specimen to a constant mass (Note 1). Cool the specimen to room temperature at 77 ± 9°F (25 ± 5°C), and record the dry mass A. Immerse each specimen in water at 77 ± 1.8°F (25 ± 1°C) for 4 ± 1 minute and record the immersed mass, C. Remove the specimen from the water, quickly damp dry the specimen by blotting with a damp towel as quickly as possible, and determine the surface-dry mass, B. Any water that seeps from the specimen during the weighing operation is considered part of the saturated specimen (Note 1). Each specimen shall be immersed and weighed individually.

Note 1: Constant mass shall be defined as the mass at which further drying at 125 ± 5°F (52 ± 3°C) does not alter the mass by more than 0.05 percent. Samples saturated with water shall initially be dried overnight at 52 ± 3°C (125 ± 5°F) and then weighed at 2-hour drying intervals. Recently molded laboratory samples which have not been exposed to moisture do not require drying.

Note 2: If desired, the sequence of testing operations may be changed to expedite the test results. For example, first the immersed mass (C) can be taken, then the surface-dry mass (B), and finally the dry mass (A).

Note 3: Terry cloth has been found to work well for an absorbent cloth. Damp is considered to be when no water can be wrung from towel.

5. CALCULATION

5.1 Calculate the bulk specific gravity of the specimens as follows (round and report the value to the nearest three decimal places):

$$\text{Bulk Sp. Gr.} = \frac{A}{B - C}$$

where:

A = mass in grams of sample in air,

B = mass in grams of surface-dry specimen in air,

C = mass in grams of sample in water.

5.2 Calculate the percent water absorbed by the specimen (on volume basis) as follows:

Percent Water Absorbed by Volume

$$= \frac{B - A}{B - C} \text{ X } 100$$

5.3 If the percent water absorbed by the specimen in Section 5.2 exceeds 2 percent, use T 275 (Bulk Specific Gravity of Compacted Bituminous Mixtures Using Paraffin-Coated Specimens).

METHOD B

6. APPARATUS

6.1 *The weighing device* shall have sufficient capacity, be readable to 0.1 percent of the sample mass, or better, and conform to the requirements of M 231.

6.2 *Water Bath*, Thermostatically controlled so as to maintain the bath at 77 ± 0.9°F (25 ± 0.5°C).

6.3 *Thermometer*, ASTM 17 C (17 F), having a range of 66 to 80°F (19 to 27°C), graduated in 0.2°F (0.1°C) subdivisions.

6.4 *Volumeter*, [1] calibrated to 1200 mL or appropriate capacity depending upon the size of test sample. The volumeter shall have a tapered lid with a capillary bore.

7. PROCEDURE

7.1 Dry the specimen to constant mass. (See Note 1.) Cool the specimen to room temperature at 77 ± 9°F (25 ± 5°C) and record the dry mass. Immerse in water bath and let saturate for at least 10 minutes. At the end of the 10-minute period, fill a calibrated volumeter with distilled water at 77 ± 1.8°F (25 ± 1°C). Remove the immersed and saturated specimen from the water bath, quickly damp dry the saturated specimen by blotting with a damp towel and as quickly as possible weigh the specimen. Any water which seeps from the specimen during the weighing operation is considered a part of the saturated specimen.

7.2 Place the weighed saturated specimen into the volumeter and let stand for at least 60 seconds. Bring the temperature of the water to 77 ± 1.8°F (25 ± 1°C), and cover the volumeter making certain that some water escapes through the capillary bore of the tapered lid. Wipe the volumeter dry with a dry absorbent cloth and weigh the volumeter and contents (Note 4).

Note 4: If desired, the sequence of testing operations can be changed to expedite the test results. For example, first the mass of saturated damp dry specimen can be taken. Then the volumeter containing the saturated specimen and water can be weighed. The dry mass of the specimen can be determined last.

Note 5: Method B is not acceptable to be used for specimens that have more than 6 percent air voids.

8. CALCULATIONS

8.1 Calculate the bulk specific gravity of the sample as follows (round and report the value to the nearest three decimal places):

$$\text{Bulk Specific Gravity} = \frac{A}{B + D - E}$$

where:

A = mass in grams of dry specimen,

B = mass in grams of surface-dry specimen,

D = mass in grams of volumeter filled with water at 77 ± 1.8 °F (25 ± 1 °C), and

E = mass in grams of volumeter filled with specimen and water at 77 ± 1.8 °F (25 ± 1 °C).

8.2 Calculate the percent water absorbed by the specimen (on volume basis) as follows:

$$\text{Percent Water Absorbed by Volume} = \frac{B - A}{B + D - E} \times 100$$

8.3 If the percent water absorbed by the specimen in Section 8.2 exceeds 2 percent, use T 275 (Bulk Specific Gravity of Compacted Bituminous Mixtures Using Paraffin-Coated Specimens).

METHOD C (RAPID TEST)

9. PROCEDURE

9.1 This procedure can be used for testing specimens which are not required to be saved and which contain substantial amount of moisture. Specimens obtained by coring or sawing can be tested the same day by this method.

9.2 The testing procedure shall be the same as given in Sections 4 and 7 except for the sequence of operations. The dry mass (A) of the specimen is determined last as follows.

Note 4: A microwave oven can be used to speed up the process by initially heating the sample so that it can be broken into small pieces prior to placing it into the drying oven.

9.3 Place the specimen in a large flat bottom drying pan of known mass. Place the pan and specimen in a 230 ± 9°F (110 ± 5°C) oven. Leave the specimen in the oven until it can be easily separated to the point where the particles of the fine aggregate-asphalt portion are not larger than 1/4 in. (6.4 mm). Place the separated specimen in the 230°F (110°C) oven and dry to a constant mass. Constant mass shall be defined as the weight at which further drying at 230 ± 9°F (110 ± 5°C) does not alter the mass by more than 0.05 percent when weighed at 2-hour intervals.

9.4 Cool the pan and specimen to room temperature at 77 ± 9°F (25 ± 5°C). Determine the mass of the pan and specimen, subtract the mass of the pan and record the dry mass of the pan and record the dry mass, A.

10. CALCULATIONS

10.1 Calculate the bulk specific gravity in Sections 5.1 and 8.1.

11. REPOR T

11.1 The report shall include the following:

11.1.1 *The method used (A, B, or C).*

11.1.2 *Bulk Specific Gravity reported to the nearest thousandth.*

11.1.3 *Absorption reported to the nearest hundredth.*

12. PRECISION

12.1 Duplicate specific gravity results by the same operator should not be considered suspect unless they differ more than 0.02.

Performance Exam Checklist

Bulk Specific Gravity of Compacted Bituminous Mixtures Using Saturated Surface-dry Specimens
AASHTO T 166

Participant Name _____ Exam Date _____

Procedure Element	**Yes**	**No**
Method A (For use with laboratory compacted specimens.)		
1. Compacted specimen cooled to room temperature, 77 +/- 9 F, and record the dry mass?	_____	_____
2. Immerse each specimen in water at 77 +/- 2 F for 3 to 5 minutes and record the immersed mass to the nearest 0.1 gram?	_____	_____
3. Remove sample from water, surface dry with damp towel and weigh the specimen in air at 77 +/- 9 F to the nearest 0.1 gram?	_____	_____
4. Calculate the bulk specific gravity of the specimens by following the calculation in AASHTO T166 (Section 5.1)?	_____	_____
Method C (For use with pavement cores and chunks.)		
1. Immerse specimen in water at 77 +/- 2 F for 3 to 5 minutes and record the immersed weight to the nearest 0.1 gram?	_____	_____
2. Remove sample from water, surface dry by blotting with damp towel and immediately weigh specimen in air at 77 +/- 9 F to the nearest 0.1 gram?	_____	_____
3. Place specimen in container (noting the empty container weight), then into an oven set at 230 +/- 9 F until sample can be broken into small pieces?	_____	_____
4. Return container to oven until it has reached a constant weight?	_____	_____
5. Remove container and sample from oven and allow to cool to room temperature, 77 +/- 9 F?	_____	_____
6. Weigh pan with sample and record to nearest 0.1 gram, deducting known weight of pan to arrive at oven-dried sample weight?	_____	_____
7. Calculate the bulk specific gravity of the specimen by following the calculation in AASHTO T166 (Section 5.1)?	_____	_____

First attempt: Pass ☐ Fail ☐ Second attempt: Pass ☐ Fail ☐

Signature of Examiner _____

Comments:

SAMPLING OF BITUMINOUS PAVING MIXTURES FOP FOR AASHTO T 168

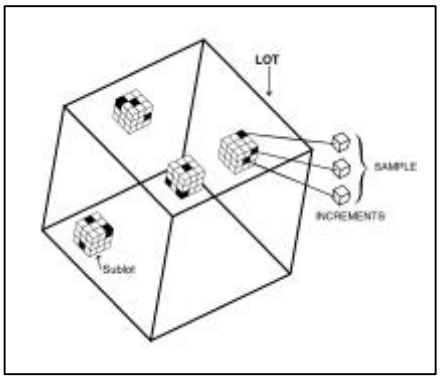

Sampling from a lot

Significance

01 Testing bituminous paving mixtures in the field begins with obtaining and preparing the sample to
02 be tested. Standardized procedures for obtaining a representative sample have been established. Producing strong, durable, reliable pavement in roadways requires careful sampling and accurate testing.

Technicians must be patient and follow these procedures. If one considers that the specifications require quality tests to be made on only a small portion of the total material placed, the need for a truly representative sample is apparent. For this reason, every precaution must be taken to obtain a sample that is truly representative of the entire batch and then to protect that sample from contamination and physical damage.

Scope

This procedure covers the sampling of bituminous paving mixtures in accordance with AASHTO T 168. The sampling of aggregate used in bituminous paving mixtures shall be in accordance with the FOP for AASHTO T 2.

<u>The Standard Specifications require that sample of Hot Mix Asphalt mixtures be taken from the hauling vehicle.</u>

03 **Apparatus**

04

- ~~Flat-bottomed scoop 150 x 400 x 100 mm (6 x 16 x 4 in.) if sampling from a roadway~~
- Shovel
- Sample containers: such as cardboard boxes, metal cans, stainless steel bowls, or other agency-approved containers
- ~~Template to match conveyor belt shape~~

- ~~Scoops, trowels, or other equipment to obtain mix~~
- ~~Sampling plate: heavy gauge metal plate 380 mm x 380 mm (15 in x 15in) minimum 8 gauge thick with a wire attached to one corner long enough to reach from the center of the paver to the outside of the farthest auger extension. Holes ¼ in diameter should be provide in each corner.~~
- ~~Cookie cutter sampling device: A 330mm (13 in.) square sampling template, constructed from 75mm x 50mm x 3mm (3 in. x 2 in. x 1/8 in.) formed steel angle with two 100mm x 150 mm x 9mm (4 in. x 6 in. x 3/8 in. handles. See diagram~~

General Comments

05 1. Sampling is as important as testing, and every precaution must be taken to obtain a truly representative sample.
2. Care shall be taken to prevent contamination of bituminous mixes by dust or other foreign matter, and to avoid segregation of aggregate and bituminous materials.
3. Samples of mix upon which acceptance or rejection is based shall be selected at random, and may be obtained by, or under the observation of, the purchaser or authorized representative.
06 4. Some agencies require mechanical sampling devices for hot mix asphalt (HMA) and cold feed aggregate on some projects. These are normally permanently attached devices that allow a sample container to pass perpendicularly through the entire stream of material or divert the entire stream of material into the container. Operation may be hydraulic, pneumatic, or manual and allows the sample container to pass through the stream twice, once in each direction, without overfilling. Special caution is necessary with manually operated systems since a consistent speed is difficult to maintain and non-representative samples may result. Check agency requirements for the specifics of required sampling systems.

Sample Size

07 Sample size depends on the test methods specified by the agency for acceptance. ~~Check agency requirement for the size required. Commonly, 10 kg are required for determining asphalt cement binder content by the ignition method (AASHTO TP 53) and up to 20 kg may be required when using the nuclear method (WAQTC TM 4).~~

The normal field sample should be between 100 lbs (45 kg) and should as a minimum be approximately four times that required for testing.

Sampling

08 • **General**

1. The material shall be inspected to determine variations. The seller shall provide equipment for safe and appropriate sampling including sampling devices on plants, when required.

09 ~~2. Place dense graded mixture samples in cardboard boxes or stainless steel bowls. Place open graded mixture samples in~~
10 ~~stainless steel bowls. Do not put open graded mixture samples in boxes until they have cooled to the point that bituminous material will not migrate from the aggregate.~~

Place dense graded mixture samples in suitable container. Place open graded mixture samples in stainless steel bowls. Do not put open graded mixture samples in boxes until they have cooled to the point that bituminous material will not migrate from the aggregate.

11 • **Sampling from a Conveyor Belt**

WSDOT has deleted this section.

12 • **Attached Sampling Devices**

WSDOT has deleted this section.

13

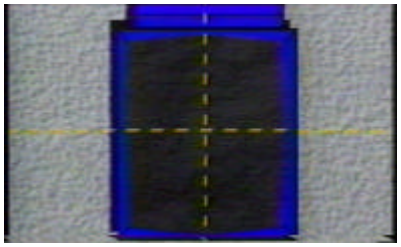

Quadrants in a load

14

- **Sampling from Truck Transports**
  1. Obtain samples in four approximately equal increments from haul units.
  2. Obtain each increment from approximately 300 mm (12 in.) below the surface, in each of the four quadrants of load.
  3. Combine the increments to form a sample of the required size.

15

- **Sampling from a Roadway Prior to Compaction (Scoop Method)**

  WSDOT has deleted this section.

16

Sampling from transport

17

- **Sampling from Roadway Prior to Compaction (Plate Method)**

  WSDOT has deleted this section.

- **Sampling from a Paver**

  WSDOT has deleted this section.

18

Identification and Shipping

1. Identify sample containers as required by the agency.
2. Ship samples in containers that will prevent loss, contamination, or damage.
3. Refer to the sample identification requirements enumerated in FOP for WSDOT Test Method 712.

19

Tips!

20

- Check agency requirements for
  - sample size needed
  - sampling device requirements
  - allowable sampling techniques

21

Performance Exam Checklist

Sampling Bituminous Paving Mixtures
FOP for AASHTO T 168

Participant Name _____ Exam Date _____

Procedure Element	**Yes**	**No**
1. Containers of correct type and ample size available?	_____	_____
2. Samples from truck transports taken from four quadrants at required depth (300 mm)?	_____	_____
3. Sample size meets agency requirements?	_____	_____
4. Sample identified as required?	_____	_____

Comments: First attempt: Pass ☐ Fail ☐ Second attempt: Pass ☐ Fail ☐

_____

_____

_____

_____

_____

_____

_____

_____

_____

_____

Signature of Examiner _____

WSDOT Test Method No. 176[1]

Plastic Fines in Graded Aggregates and Soils by Use of the Sand Equivalent Test

AASHTO DESIGNATION: T 176-00

1. SCOPE

1.1 This test is intended to serve as a rapid field test to show the relative proportions of fine dust or claylike material in soils or graded aggregates.

1.2 The following applies to all specified limits in this standard: For the purpose of determining conformance with these specifications, an observed value or a calculated value shall be rounded off "to the nearest unit" in the last right-hand place of figures used in expressing the limiting value, in accordance with R 11, Recommended Practice for Indicating Which Places of Figures Are to Be Considered Significant in Specified Limiting Values.

1.3 The values stated in English units are to be regarded as the standard.

1.4 Refer to R 16 for regulatory information for chemicals.

2. APPARATUS

2.1 A graduated plastic cylinder, rubber stopper, irrigator tube, weighted foot assembly, and siphon assembly, all conforming to their respective specifications and dimensions shown in Figure 1. Fit the siphon assembly to a 1 gal (4-L) bottle of working calcium chloride solution (see Section 2.8) placed on a shelf 36 ± 1 in. (915 ± 25 mm) above the work surface. In lieu of the specified 1 gal (4-L) bottle, a glass or plastic vat having a larger capacity may be used provided the liquid level of the working solution is maintained between 36 and 46 inches (915 and 1170 mm) above the work surface. (See Figure 2.)

Apparatus

Figure 2

Note 1: An older model of weighted foot assembly has a guide cap that fits over the upper end of the graduated cylinder and centers the rod in the cylinder, and the foot of the assembly has a conical upper surface and three centering screws to center it loosely in the cylinder. The older model does not have the sane reading indicator affixed to the rod (Figure 1), but a slot in the centering screws of the weighted foot is used to indicate the sand reading. Apparatus with the sand reading indicator (Figure 1) is preferred for testing clayey materials.

[1]This FOP is based on AASHTO T 176-00.

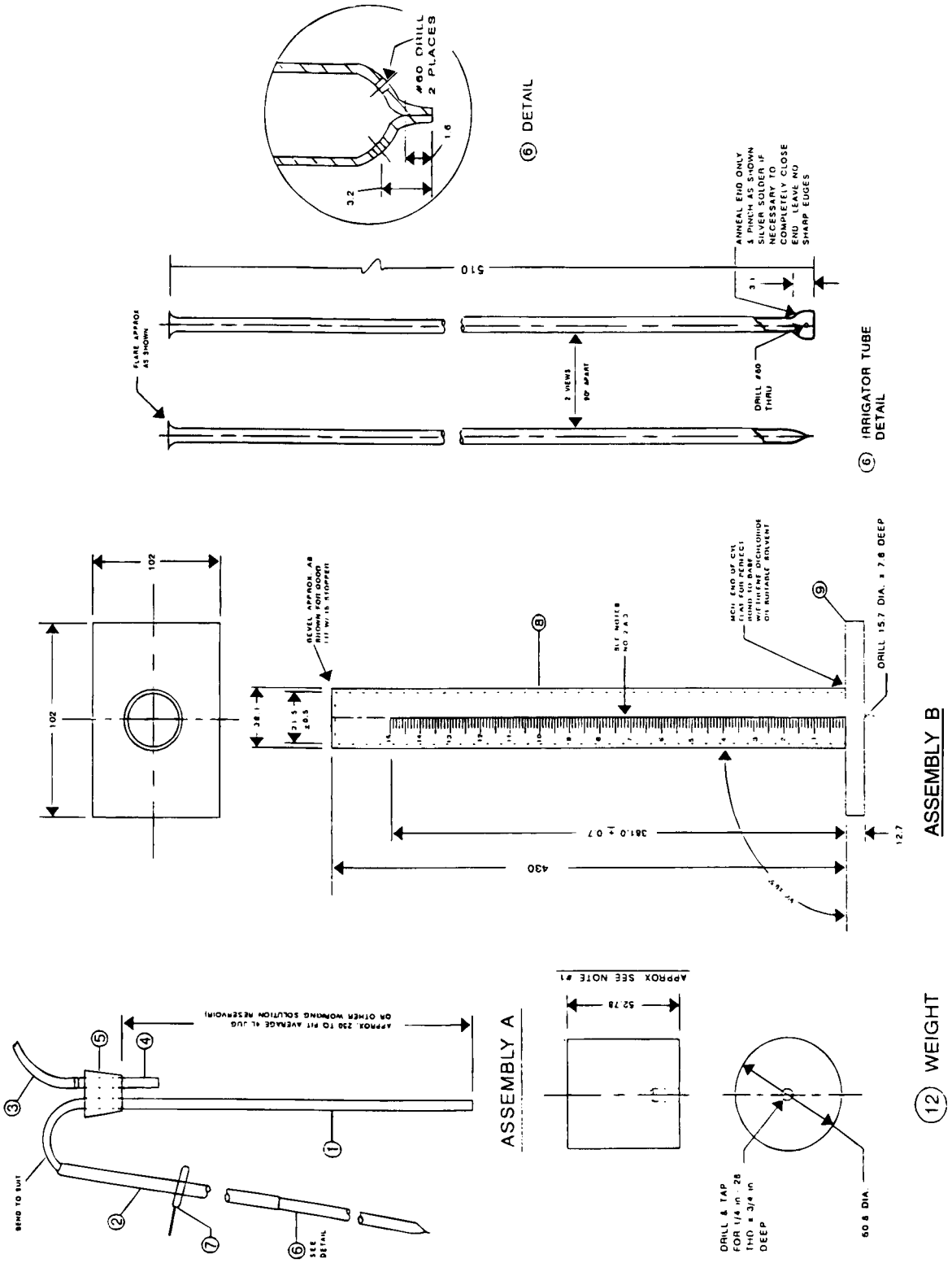

FIGURE 1 Sand Equivalent Apparatus

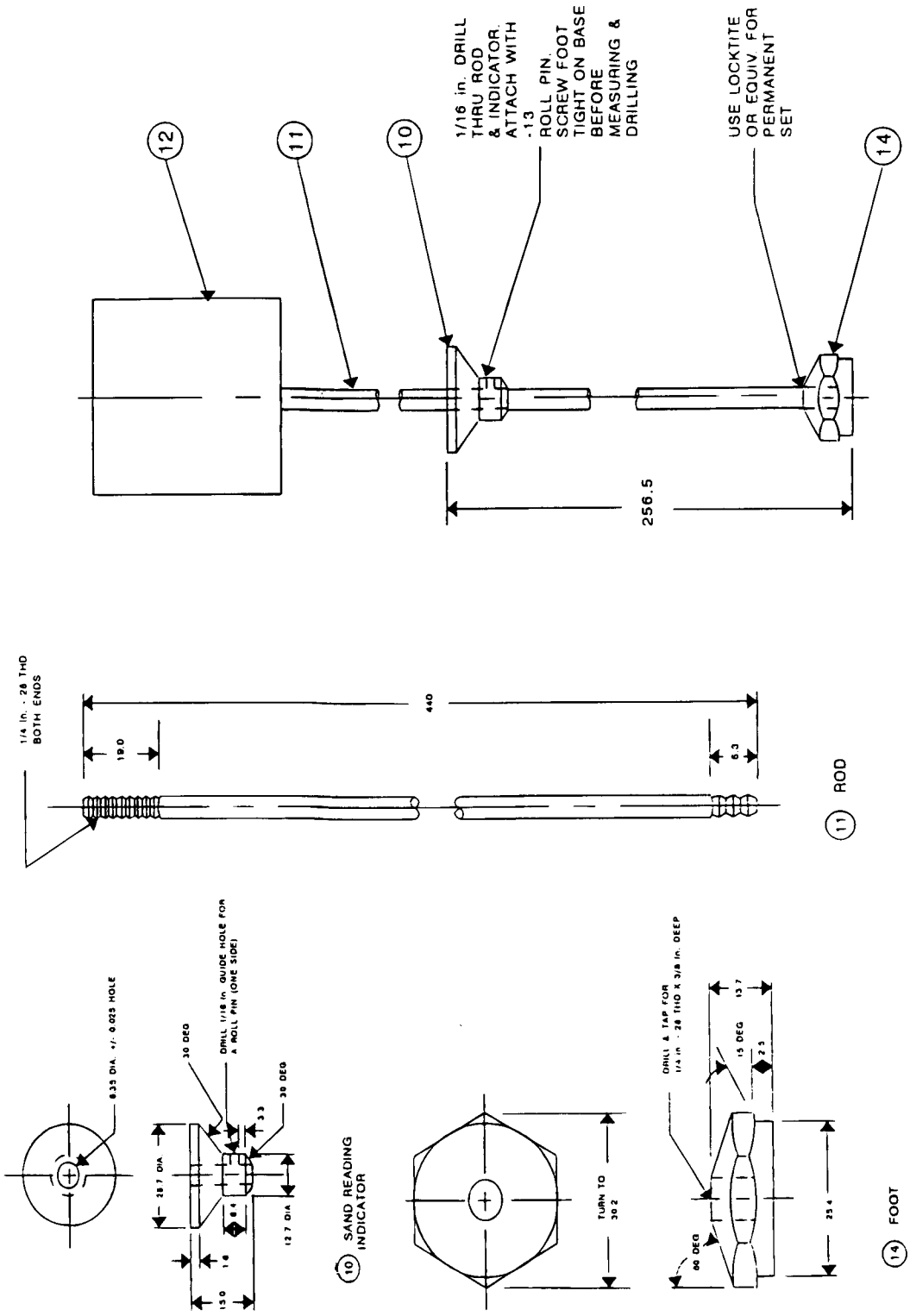

ASSEMBLY C

Note: all dimensions are shown in mm unless otherwise indicated.

FIGURE 1 Sand Equivalent Apparatus (continued)

LIST OF MATERIAL

Assembly	No. Reg.	Description	Stock size	Material	Heat Treatment
A		SIPHON ASSEMBLY			
	1	Siphon Tube	6.4 dia X 400	Copper Tube	
	2	Siphon Hose	4.8 I.D. X 1220	Rubber Tube	
	3	Blow Hose	4.8 I.D. X 50.8	Rubber Tube	
	4	Blow Tube	6.4 dia X 50.8	Copper Tube	
	5	Two-Hole Stopper	N0. 6	Rubber	
	6	Irrigator Tube	6.4 O.D. 0.89 Wall X 500 Stainless Steel Tube,Type 316		
	7	Clamp	Pinchcock, Day, BKH No. 21730 or Equiv.		
B		GRADUATE ASSEMBLY			
	8	Tube	38.1 O.D. X 430	Trans. Acrylic Plastic	
	9	Base	12.7 X 102 X 102	Trans. Acrylic Plastic	
C		WEIGHTED FOOT ASSEMBLY			
	10	Sand Reading Indicator	6.4 dia. X 14.9	Nylon 101 Type 66 Annealed	
	11	Rod	6.4 dia. X 438.2	Brass	
	12	Weight	50.8 dia. X 52.78	C.R. SH.	
	13	Roll Pin	0.16 dia. X 12.7	Steel	
	14	Foot	0.16 Hex. X 13.7	Brass	
	15	Solid Stopper	No. 7	Rubber	

NOTES:

1. "C" Mounted Foot Assembly to weigh 1000 ± 5 g.
2. Graduations on graduate to be 2.54 mm apart and every tenth mark to be numerically designated as shown. Every fifth line should be approximately 9.5 mm long. All other lines should be approximately 5.5 mm long. Depth to be 0.4 mm. Width to be 0.8 mm across the top.
3. Accuracy of scale to be ± 0.25 mm per 2.5 mm. Error at any point on scale to be ± 0.75 mm of true distance to zero.

FIGURE 1 Sand Equivalent Apparatus (continued)

2.2 A tinned measure, having a capacity of 3 oz (85 ± 5 mL), approximately 2.25 in. (57 mm) in diameter.

2.3 A wide-mouth funnel approximately 4 in. (100 mm) in diameter at the mouth.

2.4 A clock or watch reading in minutes and seconds.

2.5 A mechanical shaker having a throw of 8.00 ± 0.04 in. (203.2 ± 1.0 mm) and operating at 175 ± 2 cycles per minute (2.92 ± 0.03 Hz) (Note 2). Prior to use, fasten the mechanical sand equivalent shaker securely to a firm and level mount.

Note 2: The mechanical shaker shall be used when performing referee sand equivalent determinations. Either the mechanical or manually operated shaker should be used in lieu of the hand method whenever possible.

2.6 A manually operated shaker capable of producing an oscillating motion at the rate of 100 complete cycles in 45 ± 5 seconds, with a hand-assisted half stroke length of 5.0 ± 0.2 in. (127 ± 5 mm). The shaker shall be fastened securely to a firm and level mount by bolts or clamps if a large number of determinations are to be made.

2.7 *Stock Solution* – The materials listed in 2.7.1, 2.7.2 or 2.7.3 may be used to prepare the stock solution. If the use of formaldehyde as the biocide is of concern, the materials in 2.7.2 or 2.7.3 should be used. A fourth alternative is not to use any biocide provided the time of storage of stock solution is not sufficient to promote the growth of fungi.

2.7.1 Stock solution with formaldehyde.

2.7.1.1 *Anhydrous Calcium Chloride*, 1.0 lb (454 g) of technical grade.

2.7.1.2 *USP Glycerin*, 2050 g (1640 mL).

2.7.1.3 *Formaldehyde*, (40 volume % solution) 47 g (45 mL).

2.7.1.4 Dissolve the 454 g (1.0 lb) of calcium chloride in 1/2 gal (1.89 L) of distilled water. Cool and filter it through ready pleated rapid filtering paper. Add the 2050 g of glycerin and the 47 g of formaldehyde to the filtered solution, mix well, and dilute to 1 gal (3.78 L).

2.7.2 Stock solution with glutaraldehyde.

2.7.2.1 *Calcium Chloride Dihydrate*, 1.27 lb (577 g) of A.C.S. grade.

Note 3: A.C.S. grade calcium chloride dihydrate is specified for the stock solution prepared with glutaraldehyde because tests indicate that impurities in the technical grade anhydrous calcium chloride may react with the glutaraldehyde resulting in an unknown precipitate.

2.7.2.2 *USP Glycerin*, 2050 g (1640 mL).

2.7.2.3 *1.5-Pentanedial (Glutaraldehyde)*, 50% solution in water 59 g (53 mL).

2.7.2.4 Dissolve the 577 g (1.27 lb) of calcium chloride dihydrate in 1/2 gal (1.89 L) of distilled water. Cool and add the 2050 g of glycerin and the 59 g of glutaraldehyde to the solution, mix well, and dilute to 1 gal (3.78 L).

Note 4: 1.5 pentanedial, also known as glutaraldehyde, glutaric dialdehyde and trade name UCARCIDE 250, may be obtained as Glutaraldehyde Solution 50%.[2]

2.7.3 Stock solution with Kathon CG/ICP.

2.7.3.1 *Calcium Chloride Dihydrate*, 577 g (1.27 lb) of A.C.S. Grade.

2.7.3.2 *USP Glycerin*, 2050 g (1640 mL).

2.7.3.3 *Kathon CG/ICP*, 563 g (53 mL).[3]

2.7.3.4 Dissolve the 1.27 lb (577 g) of calcium chloride dihydrate in 1/2 gal (1.89 L) of distilled water. Cool and add the 2050 g of glycerin and the 63 g of Kathon CG/ICP to the solution, mix well and dilute to 1 gal (3.78 L).

[2]Available from Aldrich Chemical Company, P.O. Box 2060, Milwaukee, WI 53201 or Fisher Scientific, 711 Forbes Ave., Pittsburg, PA 15219

[3]Kathon CG/ICP may be obtained from Rohm and Hass Chemical Company, Independence Mall West, Philadelphia, PA 19105

2.8 Working calcium chloride solution: Prepare the working calcium chloride by diluting one measuring tin full 3 oz. (85 ± 5 mL) of the stock calcium chloride solution to 1 gal (3.8 L) with water. Use distilled or demineralized water for the normal preparation of the working solution. However, if it is determined that the local tap water is of such purity that it does not affect the test results, it is permissible to use in lieu of distilled or demineralized water except in the event of dispute. Working solutions more than 30 days old shall be discarded.

2.9 A straightedge or spatula, suitable for striking off the excess oil from the tin measure.

2.10 A thermostatically controlled drying oven capable of maintaining a temperature of 230 ± 9°F (110 + 5°C).

2.11 Quartering or splitting cloth, approximately 2 ft square, nonabsorbent material such as plastic or oil cloth.

2.12 Operational Handle for Irrigation Tube — A 25-mm diameter wooden dowel to aid in pushing the irrigation tube into firm materials. See Figure 1, Assembly B.

3. CONTROL

3.1 The temperature of the working solution should be maintained at 72 ± 5°F (22 ± 3°C) during the performance of this test. If field conditions preclude the maintenance of the temperature range, frequent reference samples should be submitted to a laboratory where proper temperature control is possible. It is also possible to establish temperature correction curves for each material being tested where proper temperature control is not possible. However, no general correction curve should be utilized for serval materials even within a narrow range of sand equivalent values. Samples which meet the minimums and equivalent requirement at a working solution temperature below the recommended range need not be subject to reference testing.

4. SAMPLE PREPARATION

4.1 The sand equivalent test shall be performed on soils or graded aggregate materials passing the No. 4 (4.75-mm) sieve. All aggregations of fine-grained soil material shall be pulverized to pass the No. 4 (4.75-mm) sieve, and all fines shall be cleaned from the particles retained on the No. 4 (4.75-mm) sieve and included with the material passing the No. 4 (4.75-mm) sieve.

4.2 Split or quarter enough of the original sample to yield approximately 1,000 g, slightly more than eight 3 oz (85 mL) tin measures of material passing the No. 4 (4.75-mm) sieve. Use extreme care to obtain a truly representative portion of the original sample (Note 3).

Note 3: Experiments show that as the amount of material being reduced by splitting or quartering is decreased, the accuracy of providing representative portions is reduced. It is imperative that the ample be split or quartered carefully. When it appears necessary, dampen the material before splitting or quarterly, to avoid segregation or loss of fines.

4.3 Prepare the desired number of test samples by one of the following methods:

4.3.1 Alternate Method No. 1 — Air Dry

4.3.1.1 Split or quarter enough material from the portion passing the No. 4 (4.75-mm) sieve to fill the 30-oz (85-mL) tin measure so it is slightly rounded above the brim. While filling the measure, tap the bottom edge of the tin on the work table or other hard surface to cause consolidation of the material and allow the maximum amount to be placed in the tin. Strike off the tin measure level full with a spatula or straightedge.

4.3.2 Alternate Method No. 2 — Pre-Wet

4.3.2.1 The sample must be in the proper moisture condition to achieve reliable results. This conditions is determined by tightly squeezing a small portion of the thoroughly mixed sample in the palm of the hand. If the cast that is formed permits careful handling without breaking, the correct moisture range has been obtained. If the materials is too dry, the cast will crumble and it will be necessary to add water and remix and retest until the material forms a cast. If the material shows any free water it is too wet to test and must be drained and air fried, mixing it frequently to insure uniformity. This overlay wet material will form a good cast when checked initially, so the drying process should continue until a squeeze check on the drying material gives a cast which si more fragile and delicate to handle than the original. If the moisture content of the original sample prepared in Section 4.2 is within the limits described above, the test sample may be obtained immediately. If the moisture content is altered to meet these limits, the altered sample should be placed in a pan, covered with a lid or with a damp cloth which does not touch the material, and allowed to stand for a minimum of 15 minutes.

4.3.2.2 After the minimum 15-minute tempering period, pace the sample on the splitting cloth and mix by alternately lifting each corner of the cloth and pulling it over the sample toward the diagonally opposite corner, causing the material to be rolled. When the material appears homogeneous, finish the mixing with the sample in a pile near the center of the cloth.

4.3.2.3 Fill the 3-oz (85-mL) tin measure by pushing it through the base of the pile while exerting pressure with the hand against the pile on the side opposite the measure. As the tin is moved though the pile, hold enough pressure with the hand to cause the material to fill the tin to overflowing. Press firmly with the palm of the hand, compacting the material and allowing the maximum amount to be placed in the tin. Strike off the tin measure level full with a spatula or straightedge.

Note 4: Moist test specimens produce lower sand equivalent values than the corresponding over-dry specimens with almost no exceptions; therefore, if a dual specification encompassing both the wet and dry methods of sample preparation is utilized, it will be necessary to determine the appropriate correction for each material since a standard correction does not appear possible. Either method can be employed with equal confidence, however.

4.3.3 Reference Method (Mechanical Shaker) — Obtain the 3-oz (85-mL) tin measure of material by one of the alternate methods, Section 4.3.1 or 4.3.2, above; then dry the test sample to constant mass at 230 ± 9°F (110 ± 5°C), and cool to room temperature before testing.

5. PROCEDURE

5.1 Start the siphon by forcing air into the top of the solution bottle through the bend copper glass, or stainless steel blow tube while the pinch clamp is open. The apparatus is now ready for use.

5.2 Siphon 4.0 ± 0.1 in. (101.6 ± 2.5 mm) of working calcium chloride solution into the plastic cylinder. Pur the prepared test sample from the measuring tin into the plastic cylinder using the funnel to avoid spillage. (See Figure 3). Tap the bottom of the cylinder sharply on the heel of the hand several times to release air bubbles and to promote thorough wetting of the sample.

Tapping bottom of cylinder

Figure 3

5.3 Allow the wetted sample to stand undisturbed for 10 ± 1 minute. At the end of the 10-minute soaking period, stopper the cylinder, then loosen the material from the bottom by partially inverting the cylinder and shaking it simultaneously.

5.4 After loosening the material from the bottom of the cylinder, shake the cylinder and contents by any one of the following methods:

5.4.1 Mechanical Shaker Method (Reference Method) — Place the stoppered cylinder in the mechanical sand equivalent shaker, set the timer, and allow the machine to shake the cylinder and contents for 45 ± 1 second.

5.4.2 Manual Shaker Method — Secure the stoppered cylinder in the three spring clamps on the carriage of the hand-operated sand equivalent shaker and reset the stroke counter to zero. Stand directly in front of the shaker and force the pointer to the stroke limit marker painted on the backboard by applying an abrupt horizontal thrust to the upper portion of the right hand spring steel strap. Then remove the hand from the strap and allow the spring action of the straps to move the carriage and cylinder in the opposite direction without assistance or hindrance Apply enough force to the right hand spring steel strap during the thrust portion of each stroke to move the pointer to the stroke limit marker by pushing against the strap with the ends of the fingers to maintain a smooth oscillating motion. (See Figure 4.) The center of the stroke limit marker is positioned to provide the proper stroke length and its width provides the maximum allowable limits of variation. The proper shaking action is accomplished only when the tip of the point reverses direction within the marker limits. Proper shaking action can best be maintained by using only the forearm and wrist action to propel the shaker. Continue the shaking action for 100 strokes.

Manually-operated shaker

Figure 4

5.4.3 Hand Method — Hold the cylinder in a horizontal position as illustrated in Figure 5 and shake it vigorously in a horizontal linear motion from end to end. Shake the cylinder 90 cycles in approximately 30 seconds using a throw of 9 ± 1 in. (229 ± 25 mm). A cycle is defined as a complete back and forth motion. To properly shake the cylinder at this speed, it will be necessary for the operator to shake with the forearms only, relaxing the body and shoulders.

Hand shaking

Figure 5

5.5 Following the shaking operation, set the cylinder upright on the work table and remove the stopper.

5.6 Irrigation Procedure — Insert the irrigator tube in the cylinder and rinse material from the cylinder walls a the irrigator is allowed. Force the irrigator through the material to the bottom of the cylinder by applying a gentle stabbing and twisting action while the working solution flows from the irrigator tip. This flushes the fine material into suspension above the coarser sand particles, (See Figure 6.) Continue to apply the tabbing and twisting action while flushing the fines upward until the cylinder is filled to the 15-in. (381-mm) mark. Then raise the irrigator slowly without shutting off the flow so that the liquid level is maintained at above 15 in. (381 mm) while the irrigator is being withdrawn. Regulate the flow just before the irrigator is entirely withdrawn and adjust the final level to 15 in. (381 mm). Final level as judged by the bottom of the meniscus shall be between the top two gradations on the tube but shall not be above the 15-in. (381-mm) level.

Irrigation

Figure 6

Note 5: For certain soils, particularly on crushed materials, the stabbing action may not be possible. For these materials, the irrigation technique is as follows: Continue to apply a twisting action as the irrigation tube is slowly withdrawn. As the tube is withdrawn, it is essential that as many fines as flushed upward until the cylinder is filled to the 15-in (381-mm) mark.

5.7 Allow the cylinder and contents to stand undisturbed for 20 minutes ± 15 seconds. Start the timing immediately after withdrawing the irrigator tube

5.8 At the end of the 20-minute sedimentation period, read and record the level of the top of the clay suspension. This is referred to as the "clay reading." If no clear line of demarcation has formed at the end of the specified 20-minute sedimentation period, allow the sample to stand undisturbed until a clear reading can be obtained, then immediately read and record the level of the top of the clay suspension and the total sedimentation time. If the total sedimentation time exceeds 30 minutes, rerun the test using three individual samples of the same material. Read and record the clay column height of that sample requiring the shortest sedimentation period only.

5.9 After the clay reading has been taken, the "sand reading" shall be obtained by one of the following methods:

5.9.1 When using the weighted foot assembly having the sand indictor on the rod of the assembly, place the assembly over the cylinder and gently lower the assembly toward the sand. Do not allow the indicator to hit the mouth of the cylinder as the assembly is being lowered. As the weighted foot comes to rest on the sand, tip the assembly toward the graduations on the cylinder until the indicator touches the inside of the cylinder. Subtract 254 mm (10 in.) from the level indicated by the extreme top edge of the indicator and record this value as the "sand reading." (See Figure 7.)

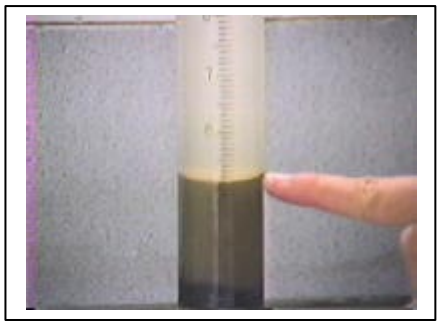

Clay reading

Figure 7

5.9.2 If an older model weighted foot assembly having centering screws is used, keep one of the centering screws in contact with the cylinder wall near the graduations so that it can be seen at all times while the assembly is being lowered. When the weighted foot has come to rest on the sand, read the level of the centering screw and record this value as the "sand reading."

5.10 If clay or sand readings fall between 0.1-in. (2.5-mm) graduations, record the level of the higher graduation as the reading. For example, a clay reading of 7.95 would be recorded as 8.0, and a sand reading of 3.22 would be recorded as 3.3.

Note 6: Samples obtained from aggregate proposed for use in hot asphalt paving mixtures shall be prepared by oven-drying if acceptance of the material is based on tests on material that has passed through a hot plant drier.

6. CALCULATIONS

6.1 Calculate the sand equivalent (SE) to the nearest 0.1 using the following formula:

$$SE = \frac{\text{Sand Reading} \times 100}{\text{Clay Reading}}$$

6.2 If the calculated sand equivalent is not whole number, report it as the next higher whole number, as in the following example:

$$SE = \frac{3.3}{8} \times 100 = 41.25$$

which is reported as 42.

6.3 If it is desired to average a series of sand equivalent values, average the whole number values determined as described above. If the average of these values is not a whole number, raise it to the next higher whole number, as in the following example:

Calculated SE values: 41.2, 43.8, 40.9

After raising each to the next higher whole number, they become: 42, 44, 41.

The average of these values is then determined:

$$\frac{42 + 44 + 41}{3} = 42.3$$

6.3.1 Since the average value is not a whole number, it is raised to the next higher whole number and the reported averages and equivalent value is reported as 43.

7. PRECAUTIONS

7.1 Perform the test in a location free of vibrations; vibrations may cause the suspended material to settle at a rate greater than normal.

7.2 Do not expose the plastic cylinders to direct sunlight any more than is necessary.

7.3 Removal of Organic Growth: Occasionally it may be necessary to remove an organic growth from the working calcium chloride solution container and from the inside of the flexible tubing and irrigator tube. This organic material can easily be seen as a slimy substance in the solution. To remove this growth, prepare a cleaning solvent by diluting sodium hypochlorite[1] with an equal quantity of water. Fill the solution container with the prepared cleaning solvent, allow about a liter of cleaning solvent to flow through the siphon assembly and irrigator tube, then place the pinch clamp on the end of the tubing to cut off the flow of solvent and to hold

the solvent in the tube. Refill the container and allow to stand overnight. After soaking, allow the cleaning solvent to flow out through the siphon assembly and irrigator tube. Remove the siphon assembly from the solution container and rinse both with clear water. The irrigator tube and siphon assembly can be rinsed easily by attaching a hose between the tip of the irrigator tube and water faucet and backwashing fresh water through the tube.

7.4 Occasionally the holes in the tip of the irrigator tube ay become clogged by a particle of sand. If the obstruction cannot be freed by any other method, use a pin or other sharp object to force it out, using extreme care not to enlarge the size of the opening.

8. OPERATOR QUALIFICATIONS

WSDOT has deleted this section.

Performance Exam Checklist

Plastic Fines in Graded Aggregates and Soils by the Use of the Sand Equivalent Test FOP for AASHTO T 176

Participant Name _____ Exam Date _____

Procedure Element	**Yes**	**No**
Sample Preparation		
1. Sample passed through No. 4 (4.75 mm) sieve?	_____	_____
2. Split or quarter slightly more than four 85 mL tins (approx. 1,000g to 1,500g) of material passing the No. 4 (4.75mm) sieve? ***Note:*** If necessary, the material may be dampened before splitting to avoid segregation or loss of fines.	_____	_____
3. Material in clods broken up and re-screened?	_____	_____
4. No fines lost?	_____	_____
5. Temperature of working solution 72±5 F (22 ±3°C)?	_____	_____
6. Working calcium chloride solution 36 ± 1 in. (915 mm ± 25 mm) above the work surface?	_____	_____
7. 4 ± 0.1in (101.6 ± 2.5 mm) working calcium chloride solution siphoned into cylinder?	_____	_____
8. Working solution dated?	_____	_____
Method 2 — Pre-Wet		
1. Sample sprayed with water to dampen and prevent loss of fines?	_____	_____
2. Material checked for moisture condition by tightly squeezing small portion in palm of hand and forming a cast?	_____	_____
3. Sample at proper water content?		
a. If too dry, (cast crumbles easily), water added and re-mixed?	_____	_____
b. If too wet (shows free water), sample drained, air dried and mixed frequently?	_____	_____
4. If either 3(a) or 3(b) above occurred, sample placed in pan, covered with lid or damp cloth (not touching sample), and allowed to stand for at least 15 minutes?	_____	_____
5. Sample placed on splitting cloth and mixed by alternately lifting each corner of the cloth and pulling it over the sample toward diagonally opposite corner, causing material to be rolled?	_____	_____

Procedure Element	Yes	No
6. Is material thoroughly mixed?	_____	_____
7. When material appears to be homogeneous, mixing finished with sample in a pile near center of cloth?	_____	_____
8. Fill the 85 mL tin by pushing through base of pile with other hand on opposite side of pile?	_____	_____
9. Material fills tin to overflowing?	_____	_____
10. Material compacted into tin with palm of hand?	_____	_____
11. Tin struck off level full with spatula or straightedge?	_____	_____
12. Prepared sample funneled into cylinder with no loss of fines?	_____	_____
13. Bottom of cylinder tapped sharply on heel of hand several times to release air bubbles?	_____	_____
14. Wetted sample allowed to stand undisturbed for 10 min. ± 1 min.?	_____	_____
15. Cylinder stoppered and material loosened from bottom by shaking?	_____	_____
16. Properly performed shaking method?		
Mechanical Shaker Method (Reference Method)	_____	_____
Manual Shaker Method	_____	_____
Hand Shaking Method	_____	_____
17. Following shaking, cylinder set vertical on work surface and stopper removed?	_____	_____
18. Irrigator tube inserted in cylinder and material rinsed from cylinder walls as irrigator is lowered?	_____	_____
19. Irrigator tube forced through material to bottom of cylinder bygently stabbing and twisting action?	_____	_____
20. Stabbing and twisting motion applied until cylinder filled to 15 in. (381 mm) mark?	_____	_____
21. Liquid raised and maintained at 15 in. (381 mm) mark while irrigator is being withdrawn?	_____	_____
22. No clear solution at top of column?	_____	_____
23. Contents let stand 20 minutes ± 15 seconds?	_____	_____
24. Timing started immediately after withdrawal of irrigator?	_____	_____
25. No vibration or disturbance of the sample?	_____	_____
26. Readings taken at 20 minutes or up to 30 minutes, when a definite line appears?	_____	_____
27. Weighted foot assembly lowered into cylinder without hitting mouth of cylinder?	_____	_____

Procedure Element	Yes	No
28. Calculations made to 0.1 and reported to the next higher whole number?	_____	_____
29. SE is based on the average results of two samples?	_____	_____
30. If the two SE values vary by more than ± 4 points from the average of the tests, additional tests run?	_____	_____

Comments: First attempt: Pass ☐ Fail ☐ Second attempt: Pass ☐ Fail ☐

_____

_____

_____

_____

_____

_____

_____

_____

_____

_____

Signature of Examiner _____

WSDOT FOP for AASHTO T 209

Method of Test for Maximum Specific Gravity of Bituminous Paving Mixtures — "Rice Density"

1. SCOPE

   a. This method covers the determination of the maximum sp. gr. of uncompacted bituminous paving mixtures. This method is technically equivalent to AASHTO T 209.

2. APPARATUS

   a. Balance, with ample capacity, and with sufficient sensitivity to enable maximum sp. gr. of samples of uncompacted paving mixtures to be calculated to at least four significant figures; that is, to at least three decimal places.

   b. Container — A volumetric flask per AASHTO T 209 Section 6.1.

   c. Vacuum pump or water aspirator, for evacuating air from the container.

   d. Water Bath — A constant-temperature water bath (optional).

   e. Thermometers — Calibrated liquid-in-glass, or electronic digital total immersion type, accurate to 0.1°C.

3. CALIBRATION OF FLASK

   a. The volumetric flask will be calibrated periodically in conformance with established verification procedures, contact regional lab.

4. TEST SAMPLES

   a. The sample shall be obtained and reduced in accordance with WSDOT Test Method No. 712, Sampling Bituminous Paving Mixtures.

   b. The size of the sample shall conform to the requirements of Table 1. Samples larger than the capacity of the container may be tested a portion at a time.

Table 1
Size of Sample

Size of Largest Particle of Aggregate in Mixture, in. (mm)	Sample Size, g
2 (50.0)	3000
1 1/2 (37.5)	2000
1 (25.0)	1200
3/4 (19.0)	1000
1/2 (12.5)	1000
3/8 (9.5)	1000
No. 4 (4.75)	500

5. PROCEDURE

a. Separate the particles of the sample, taking care not to fracture the mineral particles, so that the particles of the fine aggregate portion are not larger than ¼ in. (6.3 mm). If the mixture is not sufficiently soft to be separated manually, place it in a large flat pan and warm in an oven only until it can be so handled.

b. Cool the sample to room temperature, place in the flask, and weigh. Designate the net mass (weight) of sample as a. Add sufficient water at approximately 77°F (25°C) to cover the sample.

c. Remove entrapped air by subjecting the contents to a partial vacuum of 30 mm Hg or less absolute pressure for a period of 15 ± 2 minutes. A partial vacuum of 30 mm Hg absolute pressure is approximately equivalent to 730 mm Hg reading on a vacuum gauge at sea level. Agitate the container and contents either continuously by mechanical device or manually by vigorous shaking at intervals of about two minutes. The release of entrapped air may be facilitated by the addition of a suitable wetting agent such as Aerosol OT in concentration of 0.01 percent or 1 ml of 10 percent solution in 1,000 ml of water.

d. Fill the flask with water and bring the contents to a temperature of 77 ± 1°F (25° ± 0.5°C) in a constant-temperature water bath. Determine the weight of flask (filled) and contents 10 ± 1 minute after completing c. Care must be used when filling flask to avoid reintroducing air into water.

e. In lieu of a constant temperature water bath, determine the temperature of the water within the flask and determine the mass of the flask (filled) and the contents 10 ± 1 minutes after completing c. Make the appropriate density correction to 77°F (25°C) using Table 2.

6. CALCULATION

a. Calculate the Rice sp. gr. (calculate to three decimal places) of the sample as follows:

(1) Determination at 77°F (25°C):

$$\text{Rice Sp. Gr.} = \frac{A}{A + D - E}$$

where:

A = Mass (weight) of dry sample in air, in grams,

D = Mass (weight) of flask filled with water at 77°F (25°C) in grams, and

E = Mass (weight) of flask filled with water and sample at 77°F (25°C) in grams.

(2) Determination using temperature correction:

$$\text{Rice Sp. Gr.} = \frac{A}{A + D - E} \times R$$

where:

A = Mass (weight) of dry sample in air, in grams,

D = Mass (weight) of flask filled with water at 77°F (25°C) in grams,

E = Mass (weight) of flask filled with water and sample at test temperature in grams, and

R = Factor from Table 2 to correct density of water from the test temperature to 77°F (25°C).

Note: The flask calibration is done at 77°F (25°C).

(3) Determination using weighted average:

$$\text{Weighted Average Maximum Specific Gravity} = \frac{(\text{Sp. } G_1 \text{ x } A_1) + (\text{Sp. } G_2 \text{ x } A_2)}{(A_2 + A_2)}$$

where:

Sp. G_1 = Specific gravity of first test segment

Sp. G_2 = Specific gravity of second test segment

A_1 and A_2 = Mass of dry sample in air of respective test segments

b. Calculate the rice density (calculate to one decimal place):

(1) Rice density = Rice sp. gr. × 62.24 lb/ft.^{3} (997 kg/m^3)

Table 2: Temperature Correction Factor

C°	F°	"R"	C°	F°	"R"
10.0	50.0	1.00266	**24.8**	**76.6**	**1.00005**
10.6	51.1	1.00261	**25.0**	**77.0**	**1.00000**
11.1	52.0	1.00256	**25.2**	**77.4**	**0.99995**
11.7	53.1	1.00249	**25.4**	**77.7**	**0.99990**
12.2	54.0	1.00244	**25.6**	**78.1**	**0.99984**
12.8	55.0	1.00236	**25.8**	**78.4**	**0.99979**
13.3	55.9	1.00230	**26.0**	**78.8**	**0.99974**
13.9	57.0	1.00222	**26.1**	**79.0**	**0.99971**
14.4	57.9	1.00215	**26.2**	**79.2**	**0.99968**
15.0	59.0	1.00206	**26.4**	**79.5**	**0.99963**
15.6	60.1	1.00197	**26.6**	**79.9**	**0.99958**
16.1	61.0	1.00189	**26.7**	**80.1**	**0.99955**
16.7	62.1	1.00179	27.2	81.0	0.99941
17.2	63.0	1.00170	27.3	81.1	0.99938
17.7	63.9	1.00161	27.8	82.0	0.99924
18.3	64.9	1.00150	28.3	82.9	0.99910
18.9	66.0	1.00138	28.9	84.0	0.99893
19.4	66.9	1.00128	29.4	84.9	0.99878
20.0	68.0	1.00116	30.0	86.0	0.99860
20.6	69.1	1.00104	30.6	87.1	0.99842
21.1	70.0	1.00093	31.1	88.0	0.99826
21.7	71.1	1.00080	31.7	89.1	0.99807
22.2	**72.0**	**1.00068**	32.2	90.0	0.99791
22.4	**72.3**	**1.00064**	32.8	91.0	0.99771
22.6	**72.7**	**1.00059**	33.3	91.9	0.99755
22.8	**73.0**	**1.00054**	33.9	93.0	0.99735
23.0	**73.4**	**1.00050**	34.4	93.9	0.99716
23.2	**73.8**	**1.00045**	35.0	95.0	0.99698
23.3	**73.9**	**1.00042**	35.6	96.1	0.99677
23.4	**74.1**	**1.00040**	36.1	97.0	0.99659
23.6	**74.5**	**1.00035**	36.7	98.1	0.99638
23.8	**74.8**	**1.00030**	37.2	99.0	0.99621
23.9	**75.0**	**1.00028**	37.8	100.0	0.99598
24.0	**75.2**	**1.00025**	38.3	100.9	0.99579
24.2	**75.6**	**1.00020**	38.9	102.0	0.99558
24.4	**75.9**	**1.00015**	39.4	102.9	0.99539
24.6	**76.3**	**1.00010**	40.0	104.0	0.99516

Note: Water Temperatures should be maintained within the limits shown in bold face type.

7. SUPPLEMENTAL PROCEDURE FOR MIXTURES CONTAINING POROUS AGGREGATE NOT COMPLETELY COATED

   a. If the pores of the aggregates are not thoroughly sealed by a bituminous film, they may become saturated with water during the evacuation procedure. To determine if this has occurred, proceed as follows after completing the procedure in accordance with paragraph 5d. Drain water from sample. To prevent loss of fine particles, decant water through a towel held over top of container. Break several large pieces of aggregate and examine broken surfaces for wetness.

   b. If aggregate has absorbed water, spread sample before an electric fan to remove surface moisture. Weigh at 15-minute intervals and when the loss in mass is less than 0.5 g for this interval, the sample may be considered to be surface dry. This procedure requires about two hours and should be accompanied by intermittent stirring of the sample. Conglomerations of mixture should be broken by hand. Care must be taken to prevent loss of particles of mixture.

   c. To calculate the sp. gr. of the sample, the final surface-dry mass (weight) is substituted for A in the denominator of Paragraph 6(A)(1) or 6(A)(2).

8. FIELD DETERMINATION OF RICE DENSITY FOR PAVEMENT COMPACTION CONTROL

   a. Maximum Density is to be determined daily, at the Field Lab, on the first mix sample taken in accordance with the sampling plan (i.e., random number).

   b. On the initial day of production of a new Job Mix Formula, two determinations shall be made to establish an initial average value. Sample at the beginning of production and with the first mix test of the day. The Maximum Density value from the Mix Design shall not be included in this average.

   c. If the two Maximum Densities determined on the initial day do not agree within 48 kg/m^3 (3.0 lb./ft.^{3}), a third determination shall be made. The average density shall be based on the two closest set of results.

   d. The Running Average is defined as the sum of the last five Maximum Density values divided by 5. Until five Maximum Density values have been determined the running average will be the average of however many tests are used.

   e. Subsequent Daily determinations shall be compared with previous data (the previously computed running average). If the Daily test deviates from the Running Average by more than 3.0 lb./ft.^{3} (± 48 kg/m^3), a second determination shall be made on another portion of the same sample. If the second test confirms (agrees within ± 48 kg/m (3.0 lb./ft.^{3})) the first test a new running average will be initiated, discarding all previous results. If the second test agrees with (within 3.0 lb./ft.^{3} (± 48 kg/m^3)) of the running average then the first test will be discarded and the second test will be included in the running average.

   f. Ongoing changes or revisions to the Job Mix Formula do not require a revision or new start for the running average unless the result varies by more than 3.0 lb./ft.^{3} (± 48 kg/m^3).

Performance Exam Checklist

Theoretical Maximum Specific Gravity and Density of Bituminous Paving Mixtures FOP for AASHTO T 209

Participant Name _____ Exam Date _____

Procedure Element	Yes	No
1. Particles of sample separated?	_____	_____
2. Care used not to fracture mineral fragments?	_____	_____
3. After separation, fine aggregate particles not larger than 6.4 mm?	_____	_____
4. Sample at room temperature?	_____	_____
5. Mass of bowl or flask determined?	_____	_____
6. Mass of sample and bowl or flask determined?	_____	_____
7. Mass of sample determined?	_____	_____
8. Water at approximately 25°C added to cover sample?	_____	_____
9. Entrapped air removed using partial vacuum for 15 ±2 min?	_____	_____
10. Container and contents agitated continuously by mechanical device or manually by vigorous shaking at intervals of about 2 minutes?	_____	_____
11. Release of entrapped air facilitated by addition of suitable wetting agent (optional)?	_____	_____
12. Bowl determination:		
a. Bowl and contents suspended in water at 25 ±1°C for 10 ±1 minutes?	_____	_____
b. Submerged weight of bowl and contents determined?	_____	_____
c. Submerged weight of empty bowl determined?	_____	_____
d. Net submerged weight of contents determined?	_____	_____
e. Calculate specific gravity correctly?	_____	_____

Procedure Element	**Yes**	**No**
13. Flask determination:		
a. Flask filled with water?	_____	_____
b. Flask then placed in constant temperature water bath (optional)?	_____	_____
c. Contents at 25 ±1°C or Table 2 in FOP used?	_____	_____
d. Mass of filled flask determined 10 ±1 minutes after removal of entrapped air completed?	_____	_____

Comments: First attempt: Pass ☐ Fail ☐ Second attempt: Pass ☐ Fail ☐

_____

_____

_____

_____

_____

_____

_____

_____

_____

_____

Signature of Examiner _____

WSDOT FOP for AASHTO T 217[1]

Determination of Moisture in Soils by Means of a Calcium Carbide Gas Pressure Moisture Tester

1. SCOPE

1.1 This method of test is intended to determine the moisture content of soils by means of a calcium carbide gas pressure moisture tester. The manufacturer's instructions shall be followed for the proper use of the equipment.

1.2 The following applies to all specified limits in this standard: For the purposes of determining conformance with these specifications, an observed value or a calculated value shall be rounded off "to the nearest unit" in the last right-hand place of figures used in expressing the limiting value, in accordance with R 11, Recommended Practice for Indicating Which Places of Figures Are to Be Considered Significant in Specified Limiting Values.

Note 1: This method shall not be used on granular materials having particles large enough to affect the accuracy of the test – in general any appreciable amount retained on a 4.75-mm sieve. The super 200 D tester is intended to be used to test aggregate.

1.3 The values stated in English units are to be regarded as the standard.

1.4 Refer to R 16 for regulatory information for chemicals.

2. APPARATUS

2.1 Calcium carbide pressure moisture test – a chamber with attached pressure gage for the water content of specimens having a mass of at least 20 g. (Figure 1).

Those "Speed Moisture Testers" which use a 20 g sample may be used to test aggregates and soil-aggregate mixtures where the maximum particle size is 20 mm or $^3/_4$ in or less.

2.2 Balance – shall conform to AASHTO M 231, Class G-2.

2.3 Two 31.75-mm (1.25-in.) steel balls

2.4 Cleaning brush and cloth.

2.5 Scoop for measuring calcium carbide reagent.

3. MATERIAL

3.1 Calcium carbide reagent.

Note 1: When a can of calcium carbide is opened, it shall be dated. After 3 months of use, or if the can becomes contaminated, it shall be discarded.

Note 2: The calcium carbide must be finely pulverized and should be of a grade capable of producing acetylene gas in the amount of at least 0.14 m^3/kg (2.25 ft^3/lb) of carbide.

Note 3: The "shelf life" of the calcium carbide reagent is limited, so it should be used according to the manufacturer's recommendations.

[1]This FOP is based on AASHTO T 217-87 (1996).

4. PROCEDURE

4.1 When using the 20-g or 26-g tester, place three scoops (approximately 24g) of calcium carbide in the body of the moisture tester. When using the super 200 D tester to test aggregate, place six scoops (approximately 48 g) of calcium carbide in the body of the moisture tester.

Note 4: Care must be exercised to prevent the calcium carbide from coming into direct contact with water.

4.2 Weigh a sample of the exact mass specified by the manufacturer of the instrument in the balance provided, and place the sample in the cap of the tester. When using the 20-g or 26-g size tester, place two 31.75-mm (1.25-in.) steel balls in the body of the tester with the calcium carbide.

Note 5: If the moisture content of the sample exceeds the limit of the pressure gage (12 percent moisture for aggregate tester to 20-percent moisture for soil tester), a one-half size sample must be used and the dial reading must be multiplied by 2. This proportional method is not directly applicable to the dry mass percent scale on the super 200 D tester.

4.3 With the pressure vessel in an approximately horizontal position, insert the cap in the pressure vessel and seal the unit by tightening the clamp, taking care that no carbide comes in contact with the soil until a complete seal is achieved.

4.4 Raise the moisture tester to a vertical position so that the soil in the cap will fall into the pressure vessel.

4.5 Shake the instrument vigorously so that all lumps will be broken up to permit the calcium carbide to react with all available free moisture. When steel balls are being used in the tester and when using the large tester to test aggregate, the instrument should be shaken with a rotating motion so the steel balls or aggregate will not damage the instrument or cause soil particles to become embedded in the orifice leading to the pressure diaphragm.

Note 6: Shaking should continue for at least 60 seconds with granular soils and for up to 180 seconds for other soils so as to permit complete reaction between the calcium carbide and the free moisture. Time should be permitted to allow dissipation of the heat generated by the chemical reaction.

4.6 When the needle stops moving, read the dial while holding the instrument in a horizontal position at eye level.

4.7 Record the sample mass and the dial reading.

4.8 With the cap of the instrument pointed away from the operator, slowly release the gas pressure. Empty the pressure vessel and examine the material for lumps. If the sample is not completely pulverized, the test should be repeated using a new sample. Clean the cap thoroughly of all carbide and soil before running another test.

Note 7: When removing the cap, care should be taken to point the instrument away from the operator to avoid breathing the fumes, and away from any potential source of ignition for the acetylene gas.

4.9 The dial reading is the percent of moisture by wet mass and must be converted to dry mass. With the super 200 D tester the dial reading is the percent of moisture by dry mass, and no further calculation is required.

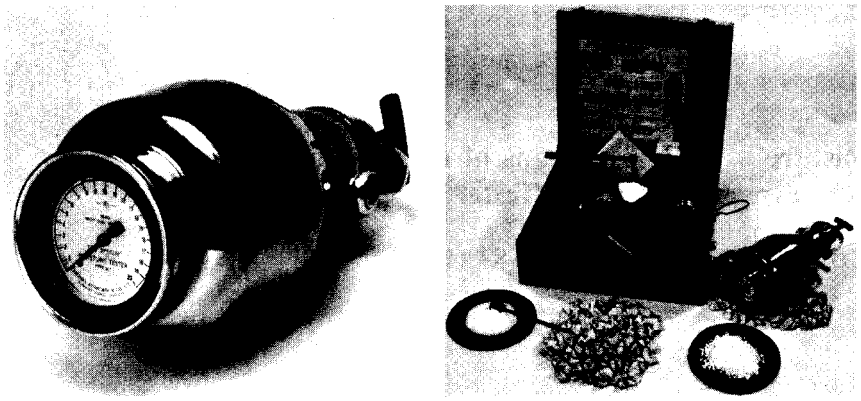

FIGURE 1 Calcium Carbide Gas Pressure Moisture Meter

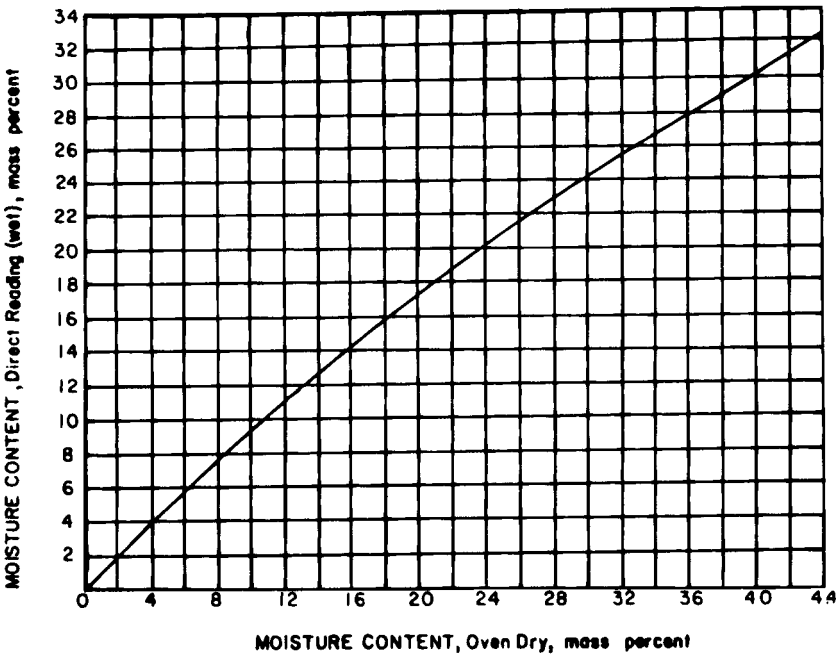

FIGURE 2 Conversion Curve for Moisture Tester Reading

5. CALCULATION

5.1 The percentage of moisture by dry mass of the soil may be determined from the conversion curve (Figure 2).

Note 8: A conversion curve similar to Figure 2 is normally supplied with the moisture tester. However, each moisture tester should be checked for accuracy of its gage, or for the accuracy of the conversion curve. Accuracy of the tester gage may be checked by using a calibration kit (obtainable from the tester manufacturer), equipped with standard gage; in case of discrepancy, the gage on the tester should be adjusted to conform with the standard gage. For checking the accuracy of the conversion curve, a calibration should be made for meter readings using locally prepared soils at known moisture contents. Also, additional testing may be necessary to extend the conversion curve (Figure 2) beyond 44 percent moisture content.

Note 9: It may be more convenient for field use of the apparatus to prepare a table of moisture tester readings versus oven-dry moisture content for the moisture tester.

5.2 Determine the percentage of moisture to the nearest whole percent.

Performance Exam Checklist

Determination of Moisture in Soils by Means of Calcium Carbide Gas Pressure Moisture Tester
FOP for AASHTO T 217

Participant Name _____ Exam Date _____

Procedure Element	Yes	No
1. Shelf life of calcium carbide reagent checked?	_____	_____
2. Correct amount of reagent placed in body of tester?	_____	_____
3. Number and size of steel balls correct?	_____	_____
4. Correct mass of moist soil placed in cap of tester?	_____	_____
5. Cap clamped to body with tester in horizontal position?	_____	_____
6. Shaking done for proper time (60 seconds for granular soils, 180 seconds for other soils)?	_____	_____
7. Shaking done without steel balls hitting cap or bottom of tester?	_____	_____
8. Reading taken with tester in horizontal position at eye level?	_____	_____
9. Reading taken after gauge stops moving?	_____	_____
10. Sample mass and gauge reading recorded?	_____	_____
11. Tester positioned with cap away from user before gas slowly released?	_____	_____
12. Moisture content on wet mass basis converted to dry mass basis?	_____	_____

Comments: First attempt: Pass ☐ Fail ☐ Second attempt: Pass ☐ Fail ☐

_____

_____

_____

_____

_____

_____

_____

_____

_____

_____

Signature of Examiner _____

WSDOT FOP for AASHTO T 224[1]

Correction for Coarse Particles in the Soil Compaction Test

1. SCOPE

1.1 This method describes a procedure whereby the maximum soil density determined by T 99 or T 180 may be adjusted to compensate for differing percentages of coarse particles retained on the No. 4 (4.75-mm) sieve when performing the density of soil and soil aggregate in-place.

The standard for the WSDOT is to use AASHTO T 99 Method A.

The Standard Specifications define non-granular material as 30% or less retained on the No. 4 (4.75-mm) sieve.

1.2 The following applies to all specified limits in this standard: For the purposes of determining conformance with these specifications, an observed value or a calculated value shall be rounded off to the nearest unit in the last right-hand place of figures used in expressing the limiting value, in accordance with R11, Recommended Practice for Indicating Which Places of Figures Are to Be Considered Significant I Specified Limiting Values.

1.3 The values stated in English units are to be regarded as the standard.

2. OUTLINE OF METHOD

2.1 When Method A or Method B of T 99 or T 180 is employed, the maximum density shall be determined on the soil fraction passing the No. 4 (4.75-mm) sieve.

2.1.1 The correction chart (Figure 1) for Method A or Method B of T 99 or T 180 will determine the corrected maximum density from the percentage of coarse particles retained on the No. 4 (4.75-mm) sieve that may be found when performing the density of soil and soil-aggregate in-place.

2.2 When Method C or Method D of T 99 or T 180 is employed, the maximum density shall be determined on the soil fraction passing the 19.0-mm sieve.

2.2.1 The correction chart (Figure 2) for Method C or Method D will determine the adjusted maximum dry density from the percentage of coarse particles retained on the No. 4 (4.75-mm) sieve that may be found when performing the density of soil and soil-aggregate in-place.

2.2.1.1 Figure 2 shows the maximum dry density may or may not be determined on coarse particles replaced as specified under T 99, Note 7 or T 180, Note 8. However, the total percentage of coarse particles passing the 19.0-mm and retained on the No. 4 (4.75-mm) sieve will have to be determined along with the percentage of coarse particles (plus No. 4 (4.75-mm) sieve) found when performing the density of soil and soil-aggregate in-place.

2.2.2 The correction chart (Figure 3) for Method C or Method D will determine the adjusted maximum dry density from the percentage of coarse particles retained on the $^{3}/_{4}$ in. (19.0-mm) sieve that may be found when performing the density of soil and soil-aggregate in-place (Appendix A1.2 and A1.2.1).

[1]This FOP is based on AASHTO T 224-86 (1996).

2.3 Significant figures are as follows:

2.3.1 Maximum dry density of the fine material passing the No. 4 (4.75-mm) sieve (D_f) 0.1pcf (1.6 kg/m^3).

2.3.2 Bulk specific gravity of the coarse material retained on the No. 4 (4.75-mm) sieve expressed as a decimal (D_c) 0.01.

2.3.3 Percent by mass of coarse particles of material retained on the No. 4 (4.75-mm) sieve expressed as a decimal (P_c) 0.001.

2.3.4 Adjusted maximum dry density of the total material (D) 0.1pcf (1.6 kg/m^3).

3. ADJUSTMENT EQUATION

3.1 An empirical equation for adjusting the maximum density obtained in accordance with Method A or B with a known percentage of coarse particles to the maximum density of the same soil containing a different percentage of coarse particles is:

$$D = (1.00 - P_c)D_f + 0.9\ P_cD_c$$

where:

D = adjusted maximum dry density of the total material, lb/ft^3 (kg/m^3)

P_c = percent, by mass, of coarse particles retained on the No. 4 (4.75-mm) sieve in the sample, expressed as a decimal

D_f = maximum laboratory dry density of the fine material passing the No. 4 (4.75-mm) sieve, lb/ft^3 (kg/m^3)

D_c = For lb/ft^3 use: 62.4 x bulk specific gravity (oven-dry basis) of the coarse particles retained on the No. 4 (4.75-mm) sieve, lb/ft^3. (1000 kg/m^3) x bulk specific gravity (oven-dry basis) of the coarse particles retained on the No. 4 (4.75-mm) sieve.

Note 1: In the above equation for computing D, 0.9 is an empirical coefficient that is dependent on the value of P_c. A coefficient of 0.9 is normally considered to be adequate in field control of earthwork or base course construction. IF a more exact adjustment of maximum dry density is desired, the following equation may be used:

$$D = \frac{1000}{\frac{P_c}{G_m} + \frac{1000P_f}{rD_f}}$$

where:

G_m = bulk specific gravity of the particles retained on the 4.75 mm (No. 4) sieve

P_f = percentage of the fine material passing the 4.75 mm (No. 4) sieve, expressed as a decimal

r = a coefficient having a value dependent on P_c, as shown in the following table

r	P_c
1.00	0.20 or less
0.99	0.21 - 0.25
0.98	0.26 - 0.30
0.97	0.31 - 0.35
0.96	0.36 - 0.40
0.95	0.41 - 0.45
0.94	0.46 - 0.50
0.92	0.51 - 0.55
0.89	0.56 - 0.60
0.86	0.61 - 0.65
0.83	0.66 - 0.70

4. SOLUTION

4.1 The solution to this equation by nomograph is shown in Figure 1, wherein the maximum density of material passing the No. 4 (4.75 mm) sieve (Section 2.1) determined in the laboratory test is plotted and a line is drawn from this point to a point on the line representing the bulk specific gravity of the coarse particles. When the percentage of coarse particles contained in a field density of soil and soil-aggregate in-place has been determined and plotted on the above line as the abscissa on the chart (Figure 1), the ordinate will give the maximum laboratory dry density corrected to the new percentage of coarse particles.

4.2 Figures 2 and 3 illustrate a solution when Method C or Method D of T 99 or T180 is utilized (Section 2.2).

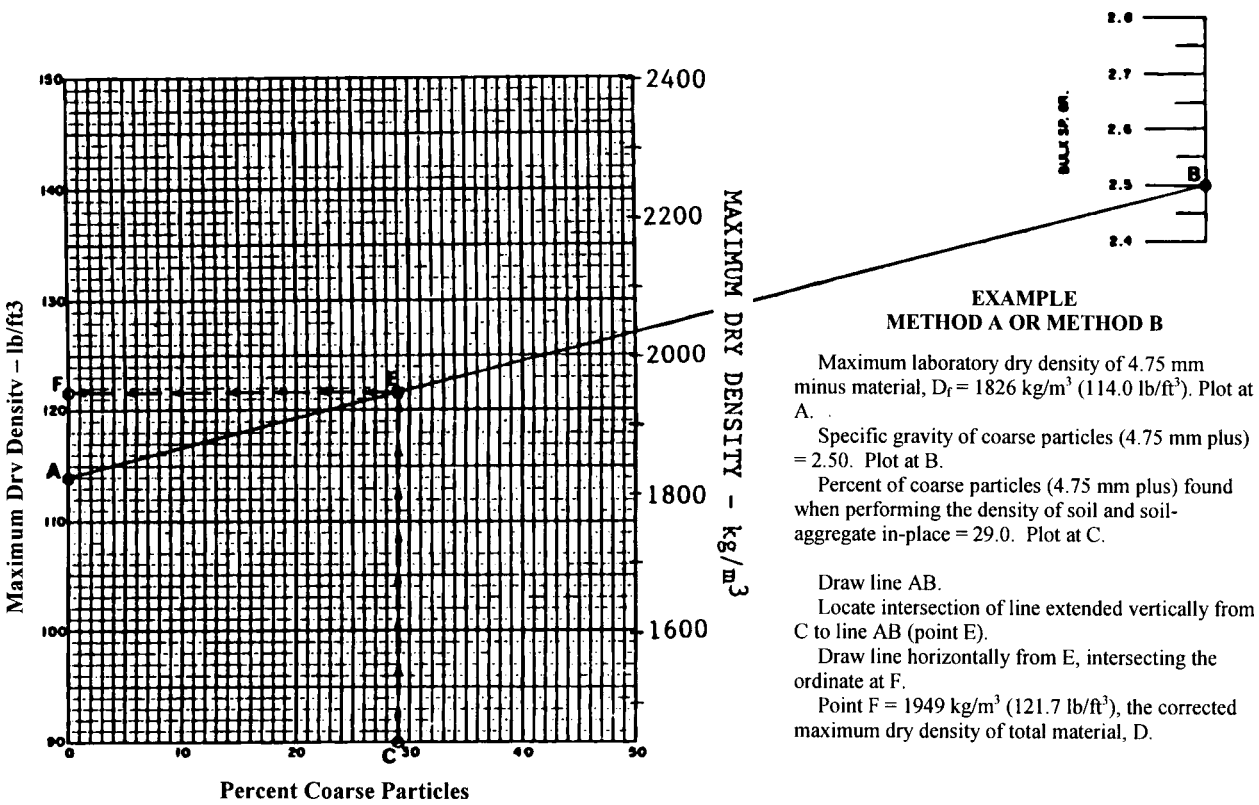

Figure 1. Density Correction Chart for Coarse Particles

EXAMPLE
METHOD C OR METHOD D

Maximum laboratory dry density of 19.0 mm minus material, D_f = 122.0 lb/ft^3. Plot at A.

Percent of coarse particles (4.75 mm plus), including any coarse particles replaced in the T99 or T180 Moisture Density Test, = 30.0. Plot at B.

Draw a line horizontally from A and a line vertically from B, meeting at point C.

Specific gravity of coarse particles (4.75 mm plus) = 2.50. Plot at E.

Draw a straight line, EC, and extend toward ordinate.

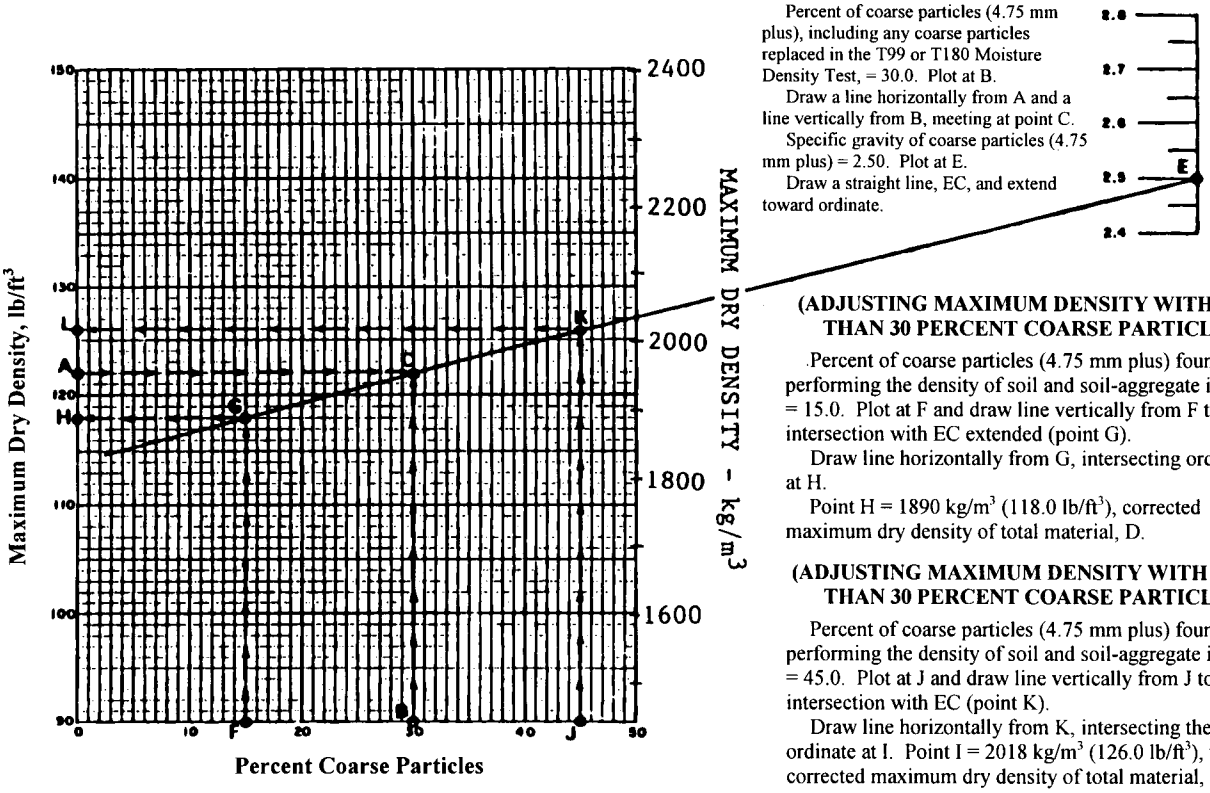

(ADJUSTING MAXIMUM DENSITY WITH LESS THAN 30 PERCENT COARSE PARTICLES)

Percent of coarse particles (4.75 mm plus) found when performing the density of soil and soil-aggregate in-place = 15.0. Plot at F and draw line vertically from F to intersection with EC extended (point G).

Draw line horizontally from G, intersecting ordinate at H.

Point H = 1890 kg/m^3 (118.0 lb/ft^3), corrected maximum dry density of total material, D.

(ADJUSTING MAXIMUM DENSITY WITH MORE THAN 30 PERCENT COARSE PARTICLES)

Percent of coarse particles (4.75 mm plus) found when performing the density of soil and soil-aggregate in-place = 45.0. Plot at J and draw line vertically from J to intersection with EC (point K).

Draw line horizontally from K, intersecting the ordinate at I. Point I = 2018 kg/m^3 (126.0 lb/ft^3), the corrected maximum dry density of total material, D.

Figure 2. Density Correction Chart for Coarse Particles

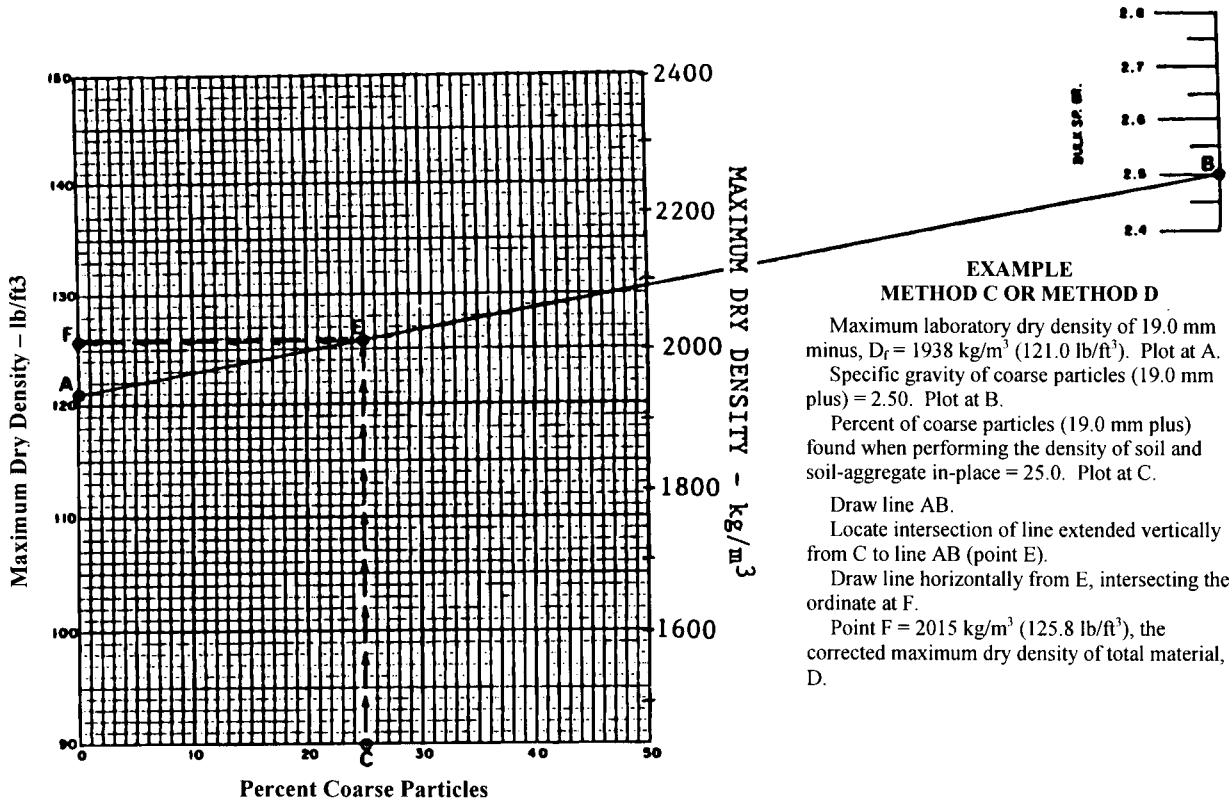

Figure 3. Density Correction Chart for Coarse Particles

5. REPORT

Report the maximum density on DOT Form 350-074 and DOT Form 351-015.

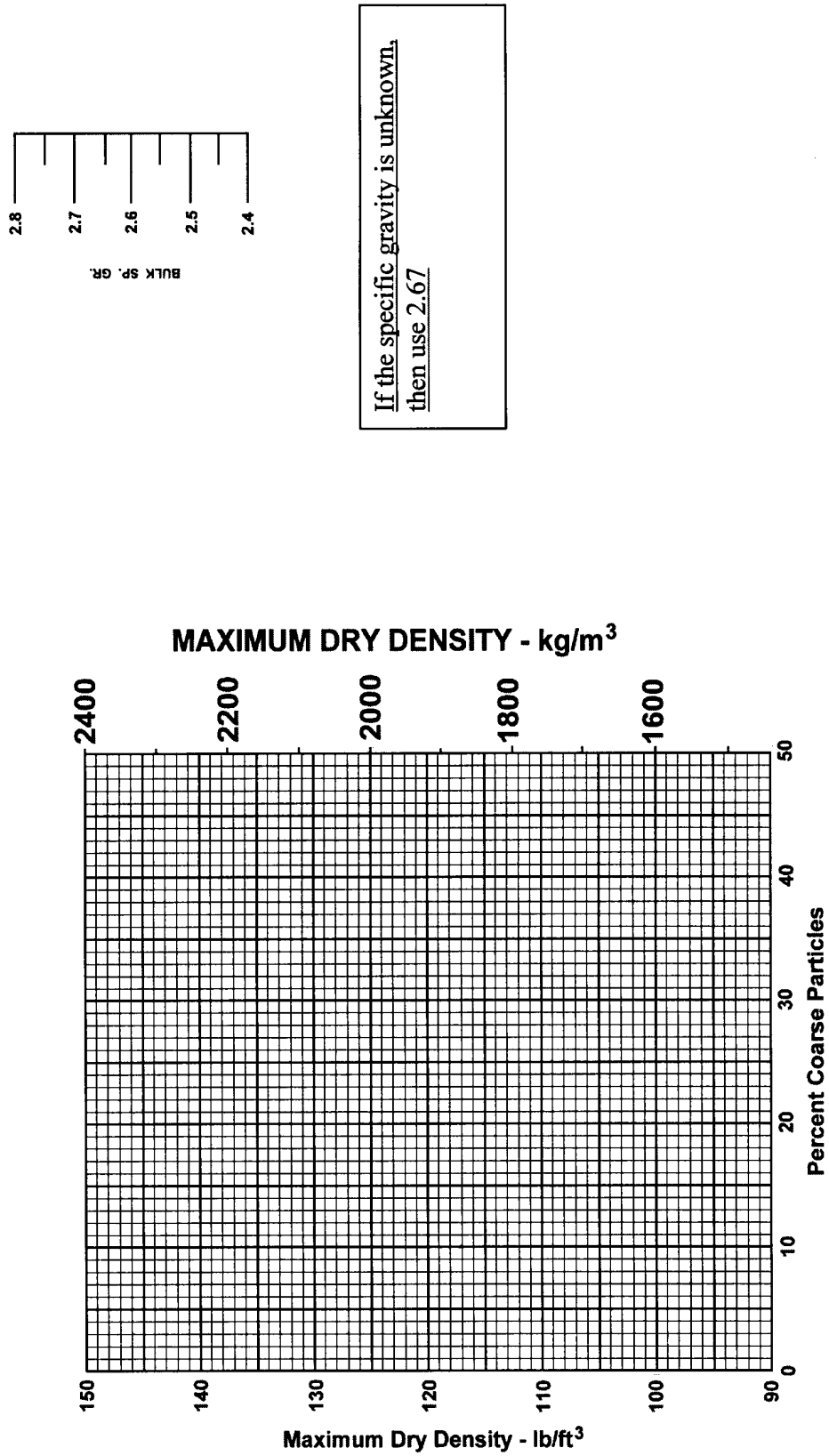

Figure 1. Density Correction Chart for Coarse Particles

APPENDIX

A1. NOTES

A1.1 These methods, described for coarse particle correction, are applicable to one type of soil and soil aggregate material only. If the characteristic of the material changes, then a moisture density relationship (T 99 or T180 test is performed to determine a new maximum density.

A1.2 T 272 describes the methods for determining different maximum densities of soil and soil-aggregate materials which reveal certain similarities and trends characteristic of the material type and source.

A1.2.1 Utilization of a Family of Curves — One Point Method (T 272) will eliminate a requirement for determining the percentage of coarse particles passing the 19.0-mm and retained on the 4.75-mm sieve when performing Method C or Method D of T 99 or T 180 and the density of soil and soil-aggregate in-place will have to be determined in order to adjust the T 99 or T 180 Method C or Method D maximum density to compensate for this percentage (Figure 3).

Performance Exam Checklist

Determination of Moisture in Soils by Means of Calcium Carbide Gas Pressure Moisture Tester
FOP for AASHTO T 217

Participant Name _____ Exam Date _____

Procedure Element	Yes	No
Gradation Analysis		
1. WSDOT SOP 615 used to identify percent of oversize material?	_____	_____
2. Sample Dried to a SSD condition (dried until no visible surface moisture present) and mass recorded?	_____	_____
3. Sample allowed to cool sufficiently prior to sieving?	_____	_____
4. Sample was shaken by hand through a No. 4 sieve for a sufficient period of time?	_____	_____
5. Recorded mass of material retained on No. 4 sieve?	_____	_____
6. Calculated and recorded percent of material retained and passing No 4 sieve?	_____	_____
Correction for Coarse Particles		
7. Maximum density of material passing No. 4 sieve, as determined by AASHTO T-99, correctly plotted onto nomograph?	_____	_____
8. Line correctly drawn from maximum density plot to the correct specific gravity?	_____	_____
9. Percent of material retained on the No. 4 screen correctly plotted onto nomograph?	_____	_____
10. Corrected maximum density correctly identified from the nomograph?		

Procedure Element	Yes	No
Equipment		
11. Where required are calibration/verifications tags present on equipment used in this procedure?	_____	_____
12. All equipment functions according to the requirements of this procedure?	_____	_____

Comments: First attempt: Pass ☐ Fail ☐ Second attempt: Pass ☐ Fail ☐

_____

_____

_____

_____

_____

_____

_____

_____

_____

_____

Signature of Examiner _____

WSDOT Test Method for AASHTO T 231[1]

Capping Cylindrical Concrete Specimens

1. SCOPE

   1.1 This method covers apparatus, materials, and procedures for capping freshly molded concrete cylinders with neat cement and hardened cylinders and drilled concrete cores with high-strength gypsum plaster or sulfur mortar.

   1.2 A cap shall be at least as strong as the concrete. The surfaces of capped compression specimens shall be plane within a tolerance of 0.002 in. (0.05 mm) across any diameter. During each day's capping operation, the planeness of the caps on at least three specimens representing the start, middle, and end of the run, shall be checked by means of a straight-edge and feeler gage, making a minimum of three measurements on different diameters, to ensure that the surfaces of the caps do not depart from a plane by more than 0.002 in. (0.05 mm).

   1.3 Monitoring of cap planeness shall be performed daily (see Section 6.2.4).

   1.4 The values stated in English units are the preferred standard.

   1.5 *This standard may involve hazardous materials, operations, and equipment. This standard does not purport to address all of the safety problems associated with its use. It is the responsibility of the user of this standard to establish appropriate safety and health practices and determine the applicability of regulatory limitations prior to use.* For specific precaution statements, see Sections 4.3 and 6.2.3.1.

2. REFERENCED DOCUMENTS

   2.1 A*ASHTO Standards:*

   M 85 Portland Cement

   T 22 Compressive Strength of Cylindrical Concrete Specimens

   T 106 Compressive Strength of Hydraulic Cement Mortar (Using 2-in. (50-mm) Cube Specimens)

   2.2 *ASTM Standards:*

   C 287 Specification for Chemical-Resistant Sulfur Mortar

   C 472 Physical Testing of Gypsum Plasters and Gypsum Concrete

   2.3 *ANSI Standards:*

   B 46.1 Standard for Surface Texture

3. SIGNIFICANCE AND USE

   3.1 This practice describes procedures for providing plane surfaces on the end surfaces of freshly molded concrete cylinders, hardened cylinders, or drilled concrete cores when the end surfaces do not conform with the planeness and perpendicularity requirements of applicable standards.

[1]This Test Method is based on AASHTO T 231-97.

3.2 *Alignment Devices* — Suitable alignment devices such as guide bars or bull's-eye levels shall be used in conjunction with capping plates to ensure that no single cap will depart from perpendicularity to the axis of cylindrical specimen by more than 0.5°C [approximately equivalent to 1/8 in. in 12 in. (3.2 mm in 305 mm)]. The same requirement is applicable to the relationship between the axis of the alignment device and the surface of a capping plate when guide bars are used. In addition, the location of each bar with respect to its plate must be such that no cap will be off-centered on a test specimen by more than 1/16 in. (1.6 mm).

3.3 *Melting Pots for Sulfur Mortars* — Pots used for melting sulfur mortars shall be equipped with automatic temperature controls and shall be made of metal or lined with a material that is nonreactive with molten sulfur.

Caution: Melting pots equipped with peripheral heating will ensure against accidents during reheating of cooled sulfur mixtures which have a crusted-over surface. When using melting pots not so equipped, a buildup of pressure under the hardened surface crust on subsequent reheating may be avoided by use of a metal rod which contacts the bottom of the pot and projects above the surface of the fluid sulfur mix as it cools. The rod should be of sufficient size to conduct enough heat to the top on reheating to melt a ring around the rod first and thus avoid the development of pressure. A large metal ladle can be substituted for the rod.

Sulfur melting pots should be used under a hood to exhaust the fumes to outdoors. Heating over an open flame is dangerous because the flash point of sulfur is approximately 440°F (227°C) and the mixture can ignite due to overheating. Should the mixture start to burn, covering will snuff out the flame. The pot should be recharged with fresh material after the flame has been extinguished.

4. CAPPING EQUIPMENT

4.1 *Capping Plates* — Neat cement caps and high-strength gypsum-plaster caps shall be formed against a glass plate of at least 1/4 in. (6 mm) thick, a machined metal plate at least 1/2 in. (13 mm) thick, on a polished plate of granite or diabase at least 3 in. (75 mm) think. Sulfur mortar caps shall be formed against similar metal or stone plates. In all cases, plates shall be at least 1 in. (25 mm) greater in diameter than the test specimen and the working surfaces shall not depart from a plane by more than 0.002 in. (0.05 mm) in 6 in. (150 mm). The surface roughness of newly finished metal plates shall not exceed that set forth in Table 4 of the American National Standard for Surface Texture (ANSI B46.1) or 125 μ in. (0.003 mm) for any type of surface and direction of lay. The surface when new shall be free of gouges, grooves, or indentations beyond those caused by the finishing operation. Metal plates that have been in use shall be free of gouges, grooves, or indentations greater than 0.010 in. (0.25 mm) deep or greater than 0.05 in.^{2} (32 mm^2) in surface area. If a recess is machined into the metal plate, the thickness of the plate beneath the recessed area shall be at least 1/2 in. (13 mm). In no case shall the recess in the plate be deeper than 1/2 in. (13 mm).

Note 1: In vertical capping devices, use of two-piece metal capping plates is advantageous as this facilitates refinishing of the capping surface should it become necessary to do so. In such devices, the lower section is a solid plate and the upper section has a circular hole which forms the recess. The two sections are customarily fastened together with machine screws. It is advantageous to have the upper surface of the lower plate case hardened. A Rockwell hardness of HRC 48 is suggested.

4.2 *Alignment Devices* — Suitable alignment devices such as guide bars or bull's-eye levels shall be used in conjunction with capping plates to ensure that no single cap will depart from perpendicularity of cylindrical specimen by more than 0.5°C [approximately equivalent to $^{1}/_{8}$ in. in 12 in. (3.2 mm in 305 mm)]. The same requirement is applicable to the relationship between the axis of the alignment device and the surface of a capping plate when guide bars are used. In addition, the location of each bar with respect to its plate must be such that no cap will be off-centered on a test specimen by more than $^{1}/_{16}$ in. (1.6 mm).

4.3 *Melting Pots for Sulfur Mortars* — Pots used for melting sulfur mortars shall be equipped with automatic temperature controls and shall be made of metal or lined with a material that is nonreactive with molten sulfur.

4.3.1 ***Caution:*** Melting pots equipped with peripheral heating will ensure against accidents during reheating of cooled sulfur mixtures which have a crusted-over surface. When using melting pots not so equipped, a buildup of pressure under the hardened surface crust on subsequent reheating may be avoided by use of a metal rod which contacts the bottom of the pot and projects above the surface of the fluid sulfur mix as it cools. The rod should be of sufficient size to conduct enough heat to the top of reheating to melt a ring around the rod first and thus avoid the development of pressure. A large metal ladle can be substituted for the rod.

4.3.1.1 Sulfur melting pots should be used under a hood to exhaust the fumes to outdoors. Heating over an open flame is dangerous because the flash point of sulfur is approximately 440°F (227°C) and the mixture can ignite due to overheating. Should the mixture start to burn, covering will snuff out the flame. The pot should be recharged with fresh material after the flame has been extinguished.

5. CAPPING MATERIALS

5.1 *Fresh Specimens* — The top surface of freshly molded specimens may be capped with a thin layer of stiff Portland cement paste. The Portland cement shall conform to the requirements of M 85.

5.2 *Hardened Specimens (Moist-Cured)* — Hardened specimens which have been moist cured may be capped with high-strength gypsum plaster or sulfur mortar meeting the requirements set forth below. The strength of the capping material shall be determined on receipt of a new lot and at intervals not exceeding three months. If a given lot of the capping material fails to conform to the strength requirements, it shall not be used, and strength tests of the replacement material shall be made weekly until four consecutive determinations conform to specification requirements.

5.2.1 *High-Strength Gypsum Cement* — Neat high-strength gypsum cement (without fillers or extenders added subsequent to its manufacture) may be used if 2-in. (50-mm) cubes are found to develop a strength of at least 5000 psi (34 Mpa) when subjected to the same environment for the same length of time as capped specimens. The cubes shall be made in accordance with the procedure for molding specimens in ASTM C 472 using the same percent of mixing water as will be used in preparing the capping material.

Note 2: Low-strength molding plasters, commonly called plaster of paris, or mixtures of plaster and Portland cement, are unsuitable for capping specimens.

Note 3: The percent of mixing water based on the mass of the high strength gypsum cement should be between 26 and 30. Use of minimum percentages of mixing water and vigorous mixing will usually permit development of acceptable strength at ages of 1 or 2 hours.

5.2.2 *Sulfur Mortar* — Proprietary or laboratory-prepared sulfur mortars may be used if allowed 2 hours in which to harden. Sulfur mortar aged 2 hours shall have a minimum compressive strength of 34 Mpa (5000 psi).

5.2.2.1 *Determination of Compressive Strength* — Prepare test specimens using a cube mold and base plate conforming to the requirements of T 106 and a metal cover plate conforming in principle to the design shown in Figure 1 (Note 4). Bring the various parts of the apparatus to a temperature of 68 to 86°F (20 to 30°C), lightly coat the surfaces that will be in contact with the sulfur mortar with mineral oil and assemble near the melting pot. Bring the temperature of the molten-sulfur mortar in the pot within a range of 265 to 290°F (129 to 143°C), stir thoroughly, and begin casting cubes. Using a ladle or other suitable pouring device, quickly fill each of the three compartments until the molten material reaches the top of the filling hole. Allow sufficient time for maximum shrinkage, due to cooling, and solidification to occur (approximately 15 minutes) and refill each hole with molten material (Note 5). After solidification is complete, remove the cubes from the mold without breaking off the knob formed by the filling hole in the cover plate. Remove oil, sharp edges, and fins from the cubes and check the planeness of the bearing surfaces in the manner described in T 106. After storage at room temperature for 2 hours, test cubes in compression following the procedure described in T 106 and calculate the compressive strength in megapascals (pounds per square inch).

Note 4: If desired, a plane phenol formaldehyde (bakelite) plate of 3 mm ($^1/_8$ in.) thickness, provided with three appropriately spaced filling holes, may be inserted between the cover plate and the mold to slow the rate of cooling of test specimens.

Note 5: The second filling helps to prevent the formation of a large void or shrinkage pipe in the body of a cube. However, such defects may occur no matter how much care is exercised, and it therefore is advisable to inspect the interior of tested sulfur mortar cubes for homogeneity whenever the strength values obtained are significantly lower than anticipated.

5.3 *Hardened Specimens (Air-Dried)* — Hardened specimens which must be tested in an air-dry condition or must be soaked for 20 to 28 hours before testing may be capped with sulfur mortar conforming to the requirements of Section 4.2.2.

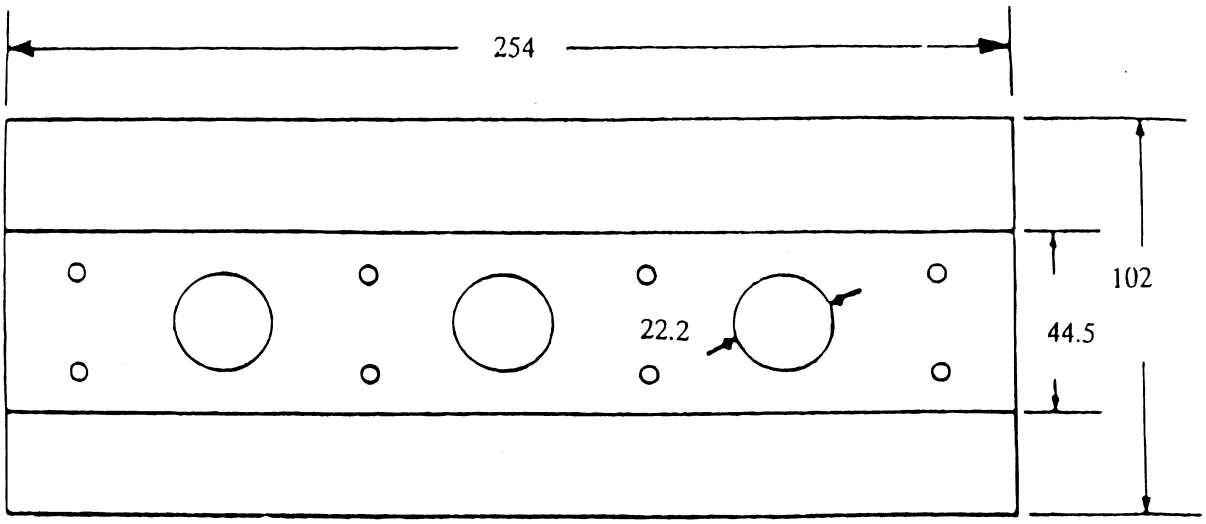

COVER PLATE – Plan View

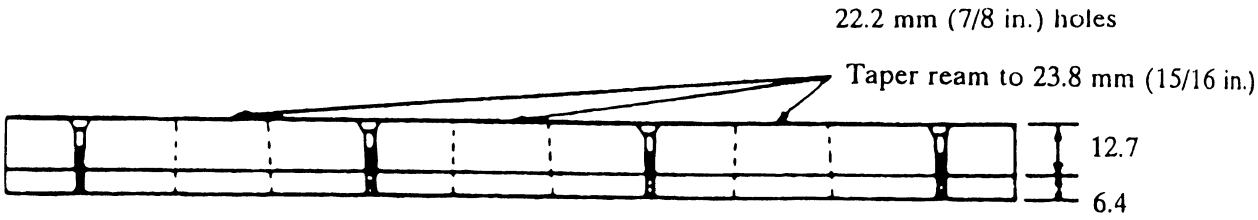

COVER PLATE – Front View

Note: All dimensions are in millimeters unless otherwise indicated.

Dimensional Equivalents

mm	6.4	12.7	22.2	44.5	102	254
in.	1/4	1/2	7/8	1 3/4	4	10

FIGURE 1 Sketch of Cover for 50-mm (2-in.) Cube Mold

6. CAPPING PROCEDURES

6.1 *Freshly Molded Cylinders* — Use only neat Portland cement pastes (Note 6) to cap freshly molded cylinders. Make caps as thin as practicable. Do not apply the neat paste to the exposed end until the concrete has ceased settling in the molds, generally from 2 to 4 hours after molding. During the molding of the cylinder, strike off the upper end even with or slightly below the plane of the rim of the mold. Mix the neat paste to a stiff consistency 2 or 4 hour before it is to be used in order to allow the paste to go through its period of initial shrinkage. The strength of the paste will depend on the consistency, water-cement ratio, curing, brand, and type of cement. For Type I and Type II cement pastes, the optimum consistency is generally produced at a water-cement ratio of 0.32 to 0.36 by mass. For Type III cement, the water ratio should generally be between 0.35 to 0.39 by mass. The paste will stiffen during the 2 to 4 hours waiting period and the use of retempering water is not recommended. However, if retempering water is used, the amount should not increase the water-cement ratio by more than 0.05 by mass. Remove free water and laitance from the top of the specimen immediately before capping. Form the cap by placing a conical mound of paste on the specimen and then gently pressing a freshly oiled capping plate on the conical mound until the plate contacts the rim of the mold. A very slight twisting motion may be required to extrude excess paste and minimize air voids in the paste. The capping plate must not rock during this operation. Carefully cover the capping plate and mold with a double layer of damp burlap and a polyethylene sheet to prevent drying. Removal of the capping plate after hardening may be accomplished by tapping the edge with a rawhide hammer in a direction parallel to the plane of the cap.

Note 6: Type I neat cement caps generally require at least 6 days to develop acceptable strength and Type III neat cement caps at least 2 days. Dry concrete specimens will absorb water from freshly mixed neat cement paste and produce unsatisfactory caps. Neat cement paste caps will shrink and crack on drying and, therefore, should be used only for specimens which are to be moist-cured continuously until time of testing.

6.2 *Hardened Concrete Specimens*:

6.2.1 *General* — Caps should be about $^{1}/_{8}$ in. (3 mm) thick, and in no instance shall any part of a cap be more than $^{5}/_{16}$ in. (8 mm) thick. If either or both ends of a specimen have coatings or deposits of oily or waxy materials that would interfere with the bond of the cap, remove such coatings or deposits. If necessary, the ends of a specimen may be slightly roughened with a steel file or wire brush to produce proper adhesion of the cap. If desired, capping plates may be coated with a thin layer of mineral oil or grease to prevent the capping material from adhering to the surface of the plate.

6.2.2 *Capping with High-Strength Gypsum Plaster* — Mix high-strength plaster for capping, using the same percent of mixing water as was used in making the qualification test described in Section 5.2.1

6.2.3 *Capping with Sulfur Mortar* — Prepare sulfur mortar for use by heating to about 265°F (130°C), as periodically determined by an all-metal thermometer inserted near the center of the mass. Empty the pot and recharge with fresh material at frequent enough intervals to ensure that the oldest material in the pot has not been used more than five times (Note 7). Fresh sulfur mortar must be dry at the time it is placed in the pot as dampness may cause foaming. Keep water away from molten sulfur mortar for the same reason. The capping plate or device should be warmed slightly before use to slow the rate of hardening and permit the production of thin caps. Oil the capping plate

lightly and stir the molten sulfur mortar immediately prior to pouring each cap. The ends of moist-cured specimens shall be dry enough at the time of capping to preclude the formation of steam or foam pockets under or in the cap larger than 1/4 in. (6 mm) in diameter. To ensure that the cap shall be bonded to the surface of the specimen, the end of the specimen shall not be oiled prior to application of the cap.

Note 7: Reuse of material must be restricted in order to minimize loss of strength and pourability occasioned by contamination of the mortar with oil miscellaneous debris, and loss of sulfur through volatilization.

Note 8: Optionally, the sulfur mortar cap may be tapped or rubbed with a light metal implement. If a hollow sound is produced, an unsatisfactory mortar cap is indicated. See Section 25.16 of the ASTM Manual of Aggregate and Concrete Testing.

6.2.3.1 ***Caution:*** Hydrogen sulfide gas may be produced during capping when sulfur mortar is contaminated with organic materials such as paraffin or oil. The gas is colorless and has a notoriously bad odor of rotten eggs; however, the odor should not be relied upon as a warning sign, since the sensitivity to the odor disappears rapidly on exposure. High concentrations are lethal and less concentrated dosages may produce nausea, stomach ache, distress, dizziness, headache, or irritation of the eyes. For this and other reasons, it is desirable that the melting pot be located under a hood or near an exhaust fan and that the capping area be well ventilated.

6.2.4 *Daily Check* — During each day's capping operation, planeness of the caps on at least three specimens representing the start, middle, and end of the run, shall be check by means of a straight-edge and feeler gage, making a minimum of three measurements on different diameters to ensure that the surfaces of the caps do not depart from a plane by more than 0.05 mm (0.002 in.).

7. PROTECTION OF SPECIMENS AFTER CAPPING

7.1 Moist-cured specimens shall be maintained in a moist condition between the completion of capping and the time of testing by returning them to moist storage or wrapping them with a double layer of wet burlap. Specimens with gypsum plaster caps shall not be immersed in water and shall not be stored in a moist room for more than 4 hours. If stored in a moist room, the plaster caps shall be protected against water dripping on their surfaces.

APPENDIX

(Nonmandatory Information)

X1. COMPOSITION AND DETERMINATION OF LOSS ON IGNITION OF SULFUR MORTAR CAPPING MATERIALS

X1.1 *Composition:*

Loss on ignition, percent 48 to 70

Residue after ignition, percent 30 to 52.

X1.2 *Determination of Loss on Ignition* – Obtain samples from caps on concrete cylinders or from cast specimens similar to caps in size and thickness. Divide each cap-size specimen into eight approximately equal triangular sections, and secure test samples by breaking either two or four of the triangular sections into small pieces with the fingers. Using a balance capable of determining mass to an accuracy of 0.01 g, measure out 20 to 25 g of fragmented material in a previously ignited, cooled, and tared Coors No. 3, high-form porcelain crucible. Place the crucible on a ring approximately 50 mm (2 in.) above a Terrel-type Bunsen burner and adjust the flame so that the sulfur burns slowly without spattering (see Section 4). When the sulfur has been completely consumed, adjust the burner for high heat and ignite the residue for 30 minutes. Cool the crucible and residue in a desiccator and determine the mass. Continue to ignite, cool, and determine the mass of the crucible until a constant mass is obtained. Calculate the percentage of loss on ignition C, as follows:

$$C = \frac{A}{B} \times 100$$

where:

A = original mass of sample less mass of the residue after ignition, and

B = original mass of sample.

NOTE X1.1 – Where the filler is known or found to be composed of carbonate minerals, the ignition test shall be made at a carefully controlled temperature in the range from 600 to 650°C, to prevent calcinations of the mineral. Small amounts of plasticizer and carbon filler will be included in the reported value for loss on ignition using the simple test herein described.

NOTE X1.2 – A referee procedure for the determination of the percent of sulfur contained in sulfur mortar may be found in ASTM C 287.

Performance Exam Checklist

Capping Cylindrical Concrete Specimens

Participant Name _____ Exam Date _____

Procedure Element	**Yes**	**No**
Sulpher Only		
1. Is the temperature taken and the mortar stirred at the beginning of the operation?	_____	_____
2. Is the capping plate lightly oiled prior to use?	_____	_____
3. Are cylinder ends dried prior to cappingAll Capping Materials?	_____	_____
4. Are perpendicularity guides or leveling devices used effectively?	_____	_____
5. Are caps checked for planeness?	_____	_____
5a. If yes, how often?	_____	_____
6. Are cylinders kept moist after capping?	_____	_____
Pad Cap-concrete Cylinders Aashtot-22 Annex		
1. Ends of cylinders checked for perpendicularity to axis?	_____	_____
2. Ends of cylinders checked for depressions greater than 0.2 inch?	_____	_____
3. Pads examined for splits or cracks?	_____	_____
4. Cylinders centered in retaining rings?	_____	_____
5. Is cylinders checked for alignment with a small load applied?	_____	_____
6. Procedure continued in accordance with C-39?	_____	_____

Comments: First attempt: Pass ☐ Fail ☐ Second attempt: Pass ☐ Fail ☐

_____

_____

_____

_____

_____

_____

_____

_____

_____

_____

Signature of Examiner _____

WSDOT FOP for AASHTO T 248[1]

Reducing Samples of Aggregate to Testing Size

1. Scope

   1.1 This methods covers for the reduction of large samples of aggregate to the appropriate size for testing employing techniques that are intended to minimize variations in measured characteristics between the test samples so selected and the large sample.

   1.2 The values stated in English units are to be regarded as the standard.

   1.3 *This standard does not purport to address all of the safety concerns, if any, associated with its use. It is the responsibility of the user of this standard to establish appropriate safety and health practices and determine the applicability of regulatory limitations prior to use.*

2. Referenced Documents

   2.1 AASHTO Standards:

   T 2 Sampling of Aggregate
   T 84 Specific Gravity and Absorption of Coarse Aggregate

   2.2 *ASTM Standards:*

   C 125 Terminology Relating to Concrete and Concrete Aggregates

3. Terminology

   3.1 *Definition*s — The terms used in this practice are defined in ASTM C 125.

4. Significance and Use

   4.1 Specifications for aggregates require sampling portions of the material for testing. Other factors being equal, larger samples will tend to be more representative of the total supply. These methods provides for reducing the large sample obtained in the field or produced in the laboratory to a convenient size for conducting a number of tests to describe the material and measure its quality in a manner that the smaller test sample portion is most likely to be a representation of the larger sample, and thus of the total supply. The individual test methods provide for minimum amount of material to be tested.

   4.2 Under certain circumstances, reduction in size of the large sample prior to testing is not recommended. Substantial differences between the selected test samples sometimes cannot be avoided, as for example, in the case of an aggregate having relatively few large size particles in the sample. The laws of chance dictate that these few particles may be unequally distributed among the reduced size test samples. Similarly, if the test sample is being examined for certain contaminants occurring as a few discrete fragments in only small percentages, caution should be used in interpreting results from the reduced size test sample. Chance inclusion or exclusion of only one or two particles in the selected test sample may importantly influence interpretation of the characteristics of the original sample. In these cases, the entire original sample should be tested.

[1]This FOP is based on AASHTO T 248-96.

4.3 Failure to carefully follow the procedures in this practice could result in providing a nonrepresentative sample to be used in subsequent testing

5. SELECTION OF METHOD

5.1 Fine Aggregate — Samples of fine aggregate that are drier than the saturated-surface-dry condition (Note 1) using a mechanical splitter according to Method A. Samples having free moisture on the particle surfaces may be reduced in size by quartering according to Method B, or by treating as a miniature stockpile as described in Method C.

5.1.1 If the use of Method B or Method C is desired, and the sample does not have free moisture on the particle surfaces, the sample may be moistened to achieve this condition, thoroughly mixed, and then the sample reduction performed.

Note 1: The method of determining the saturated-surface-dry condition is described in Test Method T 84. As a quick approximation, if the fine aggregate will retain its shape when molded in the hand. it may be considered to be wetter than saturated-surface-dry.

5.1.2 If use of Method A is desired and the sample has free moisture on the particle surfaces, the entire sample may be dried to at least the saturated-surface-dry condition, using temperatures that do ant exceed those specified for any of the tests contemplated, and then the sample reduction performed. Alternatively, if the moist sample is very large, a preliminary split may be made using a mechanical splitter having wide chute openings of 1½ in. (38 mm) or more to reduce the sample to not less than 5000 g. The portion so obtained is then dried, and reduction to test sample size is completed using Method A.

5.2 Coarse Aggregates and Mixtures of Coarse and Fine Aggregates — Reduce the sample using a mechanical splitter in accordance with Method A (preferred method) or by quartering in accordance with Method B. The miniature stockpile Method C is not permitted for coarse aggregates or mixtures of coarse and fine aggregates.

5.3 <u>Untreated materials shall be prepared for testing using this procedure. Treated materials (i.e., Hot Mix Asphalt or Asphalt Treated Base) shall be prepared for testing using WSDOT Test Method No. T 712 for reduction of size of samples of Asphalt treated materials.</u>

6. SAMPLING

6.1 The samples of aggregate obtained in the field shall be taken in accordance with T 2, or as required by individual test methods. When tests for sieve analysis only are contemplated, the size of field sample listed in T 2 is usually adequate. When additional tests are to be conducted, the user shall determine that the initial size of the field sample is adequate to accomplish all intended tests. Similar procedures shall be used for aggregate production in the laboratory.

Method A — Mechanical Splitter

7. APPARATUS

7.1 Sample Splitter — Sample splitters shall have an even number of equal width chutes, but not less than a total of eight for coarse aggregate, or 12 for fine aggregate, which discharge alternately to each side of the splitter, For coarse aggregate and mixed aggregate, the minimum width of the individual chutes shall be approximately 50 percent larger than the largest particles in the sample to be split (Note 2). For dry fine aggregate in which the entire sample will pass the 3/8 in. (9.5.mm) sieve, the minimum width of the individual chutes shall be at least 50 percent larger than the largest particles in the sample and the maximum width shall be 3/4 in. (20 mm). The splitter shall be equipped with two receptacles to hold the two-halves of the sample following splitting. It shall also be equipped with a hopper or straight edge pan which has a width equal to or slightly less than the overall width of the assembly of chutes, by which the sample may be fed at a controlled rate to the chutes. The splitter and accessory equipment shall be so designed that the sample will flow smoothly without restriction or loss of material (Figure 1).

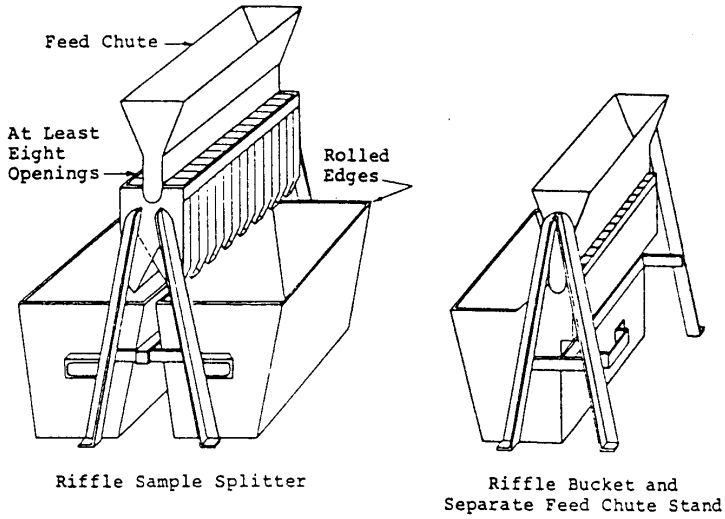

(*a*) Large Riffle Samplers for Coarse Aggregate.

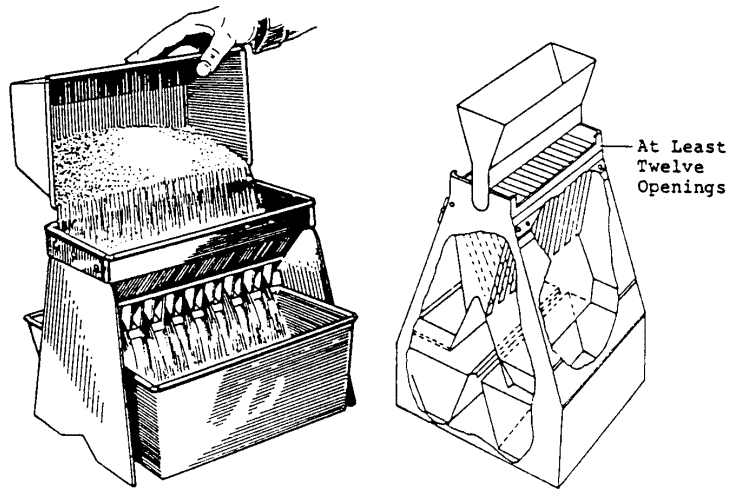

NOTE—May be constructed as either closed or open type. Closed type is preferred.
(*b*) Small Riffle Sampler for Fine Aggregate.

Figure 1: Sample Dividers (Riffles)

Note 2: Mechanical splitters are commonly available in sizes adequate for coarse aggregate having the largest particle not over 1½ in. (37.5 mm).

8. PROCEDURE

8.1 Place the original sample in the hopper or pan and uniformly distribute it from edge to edge, so that when it is introduced into the chutes, approximately equal amounts will flow through each chute. The rate at which the sample is introduced shall be such as to allow free flowing through the chutes into the receptacles below. Reintroduce the portion of the sample in one of the receptacles into the splitter as many times as necessary to reduce the sample to the size specified for the intended test. The portion of the material collected in the other receptacle may be reserved for reduction in size for other tests.

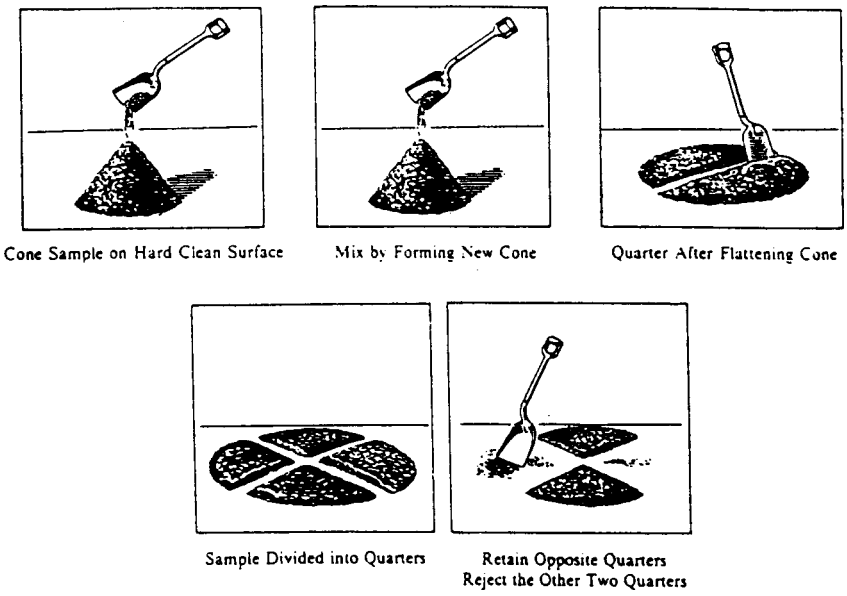

Figure 2: Quartering on a Hard, Clean Level Surface

Method B — Quartering

9. APPARATUS

9.1 Apparatus shall consist of a straightedge, scoop, shovel, or trowel; a broom or brush; and a canvas blanket approximately 6 by 8 ft. (2 by 2.5 m).

10. PROCEDURE

10.1 Use either the procedure described in 10.1.1 or 10.1.2 or a combination of both.

10.1.1 Place the original sample on a hard clean, level surface where there will be neither loss of material nor the accidental addition of foreign material. Mix the material thoroughly by turning the entire sample over three times. With the last turning, shovel the entire sample into a conical pile by depositing each shovelful on top of the preceding one. Carefully flatten the conical pile to a uniform thickness and diameter by pressing down the apex with a shovel so that each quarter sector of the resulting pile will contain the material originally in it. The diameter should be approximately four to eight times the thickness. Divide the flattened mass into four equal quarters with a shovel or trowel and remove two diagonally opposite quarters, including all fine material, and brush the cleared spaces clean. Successively mix and quarter the remaining material until the sample is reduced to the desired size (Figure 2).

10.1.2 As an alternative to the procedure in 10.1.1 when the floor surface is uneven, the field sample may be placed on a canvas blanket and mixed with a shovel as described in 10.1.1, or by alternatively lifting each corner of the canvas and pulling it over the sample toward the diagonally opposite corner causing the material to be rolled. Flatten the pile as described in 10.1.1. Divide the sample as described in 10.1.1 or if the surface beneath the blanket is uneven, insert a stick or pipe beneath the blanket and under the center of the pile, then lift both ends of the stick, dividing the sample into two equal parts. Remove the stick leaving a fold of the blanket between the divided portions. Insert the stick under the center of the pile at right angles to the first division and again lift both ends of the stick, dividing the sample into four equal parts. Remove two diagonally opposite quarters, being careful to clean the fines from the blanket. Successively mix and quarter the remaining material until the sample is reduced to the desired size (Figure 3).

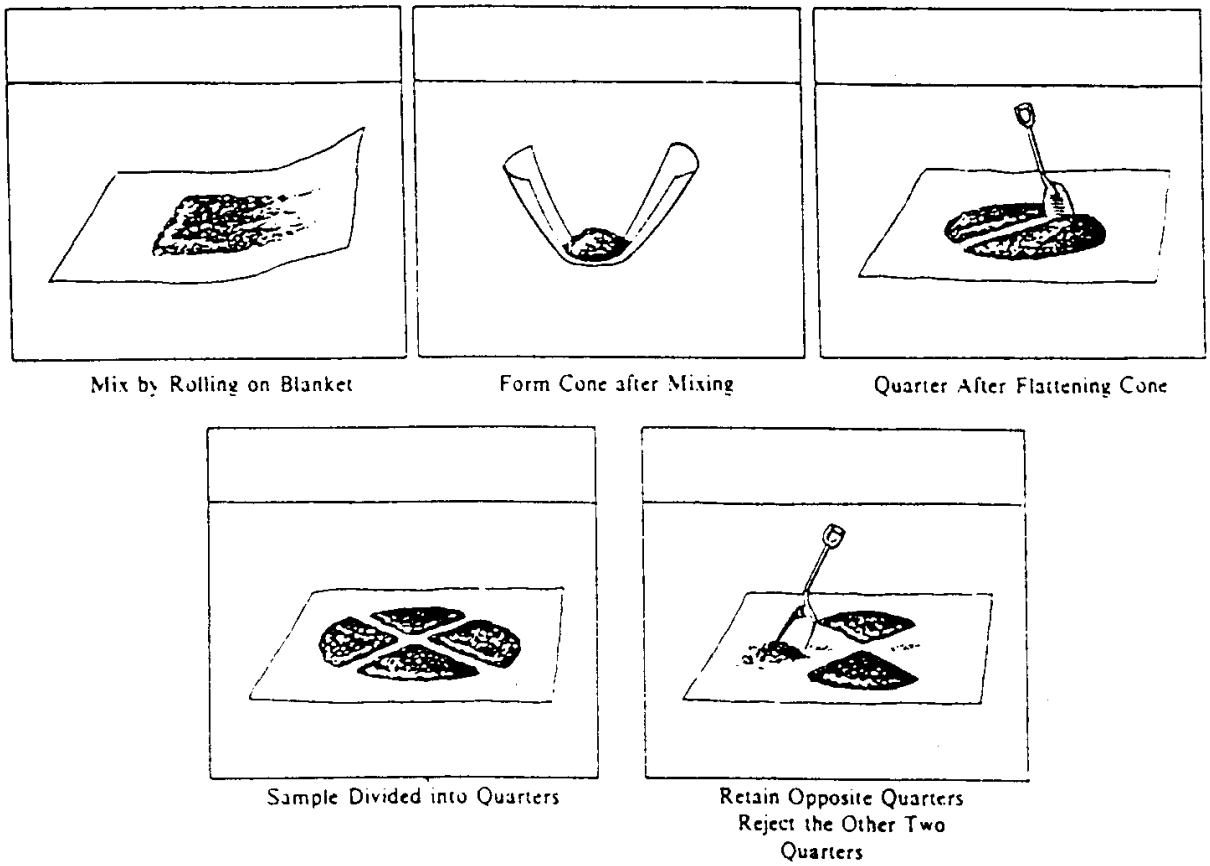

Figure 3: Quartering on a Canvas Blanket

Method C — Miniature Stockpile Sampling (Damp Fine Aggregate Only)

11. APPARATUS

11.1 Apparatus shall consist of a straight-edged scoop, shovel, or trowel for mixing the aggregate, and either a small sampling thief, small scoop, or spoon for sampling.

12. PROCEDURE

12.1 Place the original sample of damp fine aggregate on a hard clean, level surface where there will be neither loss of material nor the accidental addition of foreign material. Mix the material thoroughly by turning the entire sample over three times. With the last turning, shovel the entire sample into a conical pile by depositing each shovelful on top of the preceding one. If desired, the conical pile may be flattened to a uniform thickness and diameter by pressing the apex with a shovel so that each quarter sector of the resulting pile will contain the material originally in it. Obtain a sample for each test by selecting at least five increments of material at random locations from the miniature stockpile, using any of the sampling devices described in 11.1.

Performance Exam Checklist

Reducing Samples of Aggregates to Testing Size
FOP for AASHTO T 248

Participant Name _____ Exam Date _____

Procedure Element	**Yes**	**No**
Selection of Method		
1. Fine Aggregate		
A. Drier than saturated surface dry: Method A (Splitter) used?	_____	_____
B. Free moisture present: Method B (Quartering) used?	_____	_____
2. Coarse Aggregate and Mixtures of Fine and Coarse Aggregates		
A. Method A used (preferred)?	_____	_____
B. Method B used?	_____	_____
Method A — Splitting		
1. Material spread uniformly on feeder?	_____	_____
2. Rate of feed slow enough so that sample flows freely through chutes?	_____	_____
3. Material in one pan re-split until desired mass is obtained?	_____	_____
Method B — Quartering		
1. Sample placed on clean, hard, and level surface?	_____	_____
2. Mixed by turning over 3 times with shovel or by raising canvas and pulling over pile?	_____	_____
3. Conical pile formed?	_____	_____
4. Diameter equal to about 4 to 8 times thickness?	_____	_____
5. Pile flattened to uniform thickness and diameter?	_____	_____
6. Divided into 4 equal portions with shovel or trowel?	_____	_____
7. Two diagonally opposite quarters, including all fine material, removed?	_____	_____

Procedure Element	**Yes**	**No**
8. Cleared space between quarters brushed clean?	_____	_____
9. Process continued until desired sample size is obtained when two opposite quarters combined?	_____	_____

*The sample may be placed upon a blanket and a stick or pipe may be placed under the blanket to divide the pile into quarters***.**

Comments: First attempt: Pass ☐ Fail ☐ Second attempt: Pass ☐ Fail ☐

_____

_____

_____

_____

_____

_____

_____

_____

_____

_____

Signature of Examiner _____

WSDOT FOP for AASHTO T 255[1]

Total Moisture Content of Aggregate by Drying

1. SCOPE

1.1 This test method covers the determination of the percentage of evaporable moisture in a sample of aggregate by drying, both surface moisture and moisture in the pores of the aggregate. Some aggregate may contain water that is chemically combined with the minerals in the aggregate. Such water is not evaporable and is not included in the percentage determined by this test method.

1.2 The values stated in English units are to be regarded as the standard. The values stated in parentheses are provided for information only.

1.3 *This standard does not purport to address all of the safety concerns, if any, associated with its use. It is the responsibility of the user of this standard to establish appropriate safety and health practices and determine the applicability of regulatory limitations prior to use.* For specific precautionary statements, see 5.3.1, 7.2.1, and 7.3.1.

2. REFERENCED DOCUMENTS

2.1 *AASHTO Standards:*

M 92	Wire-Cloth Sieves for Testing Purposes
M 231	Weighing Devices Used in Testing Materials
R 16	Regulatory Information for Chemicales Used in AASHTO Tests
T 2	Sampling of Aggregate
T 19/T 19M	Bulk Density (“Unit Weight”) and Voids in Aggregate
T 84	Specific Gravity and Absorption of Coarse Aggregate
T 85	Specific Gravity and Absorption of Fine Aggregate

2.2 *ASTM Standards:*

C 125	Terminology Relating to Concrete and Concrete Aggregates C 670 Practice for Preparing Precision Statements for Test Methods for Construction Materials

3. TERMINOLOGY

3.1 *Definitions:*

3.1.1 For definitions of terms used in this test method, refer to ASTM C 125.

4. Significance and Use

4.1 This test method is sufficiently accurate for usual purposes, such as adjusting batch quantities of ingredients for concrete. It will generally measure the moisture in the test sample more reliably than the sample can be made to represent the aggregate supply. In rare cases where the aggregate itself is altered by heat, or where more refined measurement is required, the test should be conducted using a ventilated, controlled temperature oven.

[1]This FOP is based on AASHTO T 255-00.

4.2 Large particles of coarse aggregate, especially those larger than 2 in. (50 mm), will require greater time for the moisture to travel from the interior of the particle to the surface. The user of this test method should determine by trial if rapid drying methods provide sufficient accuracy for the intended use when drying large size particles.

5. APPARATUS

5.1 Balance — The balances shall have sufficient capacity, be readable to 0.1percent of the sample mass, or better, and conform to the requirements of M 231.

5.2 Source of Heat — A ventilated oven capable of maintaining the temperature surrounding the sample at 110 ± 5°C (230 ± 9°F). Where close control of the temperature is not required (see Section 4.1), other suitable sources of heat may be used, such as an electric or gas hot plate, electric heat lamps, or a ventilated microwave oven.

5.3 Sample Container — A container not affected by the heat, and of sufficient volume to contain the sample without danger of spilling, and of such shape that the depth of sample will not exceed one fifth of the least lateral dimension.

5.3.1 Precaution — When a microwave oven is used, the container shall be nonmetallic.

Note 1: Except for testing large samples, an ordinary frying pan is suitable for use with a hot plate, or any shallow flat-bottomed metal pan is suitable with heat lamps or oven. Note Precaution in Section 5.3.1.

5.4 Stirrer — A metal spoon or spatula of convenient size.

6. SAMPLING

6.1 Sampling shall generally be accomplished in accordance with T 2, except for the sample size may be as stated in Table 1.

6.2 Secure a sample of the aggregate representative of the moisture content in the supply being tested and having a mass not less than the amount listed in Table 1. Protect the sample against loss of moisture prior to determining the mass.

Table 1
Sample Size for Aggregate

Nominal Maximum Size of Aggregate, mm (in.)[A]	Mass of Normal Weight Aggregate Sample, min, kg[B]
4.75 (0.187) (No. 4)	0.5
9.5 (3 / 8)	1.5
12.5 (1 / 2)	2
19.0 (3 / 4)	3
25.0 (1)	4
37.5 (1 1 / 2)	6
50 (2)	8
63 (2 1 / 2)	10
75 (3)	13
90 (3 1 / 2)	16
100 (4)	25
150 (6)	50

Note: When determining moisture content for AASHTO T 310, the sample size will be approximately 9 lbs.

[A]Based on sieves with square openings.

[B]To determine the minimum sample weight for lightweight aggregate, multiply the value by the approximate dry-loose unit mass of the aggregate in kg/m^3 and dividing by 1600.

7. PROCEDURE

7.1 Determine the mass of the sample to the nearest 0.1 percent.

7.2 Dry the sample thoroughly in the sample container by means of the selected source of heat, exercising care to avoid loss of any particles. Very rapid heating may cause some particles to explode, resulting in loss of particles. Use a controlled temperature oven when excessive heat may alter the character of the aggregate, or where more precise measurement is required. If a source of heat other than the controlled temperature oven is used, stir the sample during drying to accelerate the operation and avoid localized overheating. When using a microwave oven, stirring of the sample is optional.

7.2.1 Caution — When using a microwave oven, occasionally minerals are present in aggregates that may cause the material to overheat and explode. If this occurs it can damage the microwave oven.

7.3 When a hot plate is used, drying can be expedited by the following procedure. Add sufficient anhydrous denatured alcohol to cover the moist sample. Stir and allow suspended material to settle. Decant as much of the alcohol as possible without losing any of the sample. Ignite the remaining alcohol and allow it to burn off during drying over the hot plate.

7.3.1 Warning — Exercise care to control the ignition operation to prevent injury or damage from the burning alcohol.

7.4 The sample is thoroughly dry when further heating causes, or would cause, less than 0.1 percent additional loss in mass.

7.5 Determine the mass of the dried sample to the nearest 0.1 percent after it has cooled sufficiently not to damage the balance.

8. CALCULATION

8.1 Calculate total evaporable moisture content as follows:

$$p = 100\ (W - D)/D$$

where:

p = total evaporable moisture content of sample, percent;

W = mass of original sample, g; and

D = mass of dried sample, g

8.2 Surface moisture content is equal to the difference between the total evaporated moisture content and the absorption, with all values based on the mass of a dry sample. Absorption may be determined in accordance with T 85, Test for Specific Gravity and Absorption of Coarse Aggregates, or T 84, Test for Specific Gravity and Absorption of Fine Aggregates

9. PRECISION AND BIAS

9.1 *Precisio*n:

9.1.1 The within-laboratory single operator standard deviation for moisture content of aggregates has been found to be 0.28 % (Note 2). Therefore, results of two properly conducted tests by the same operator in the same laboratory on the same type of aggregate sample should not differ by more than 0.79 % (Note 2) from each other.

9.1.2 The between-laboratory standard deviation for moisture content of aggregates has been found to be 0.28 % (Note 2). Therefore, results of properly conducted tests from two laboratories on the same aggregate sample should not differ by more than 0.79 % (Note 2) from each other.

9.1.3 Test data used to derive the above precision indices were obtained from samples dried to a constant mass in a drying oven maintained at 230 ± 9 F (110 ± 5°C). When other drying procedures are used, the precision of the results may be significantly different than that indicated above.

Note 2: These numbers represent, respectively, the 1s and d2s limits as described in Practice C 670.

9.2 Bias:

9.2.1 When experimental results are compared with known values from accurately compounded specimens, the following has been derived.

9.2.1.1 The bias of moisture tests on one aggregate material has been found to have a mean of +0.06 %. The bias of individual test values from the same aggregate material has been found with 95 % confidence to lie between -0.07 % and +0.20 %.

9.2.1.2 The bias of moisture tests on a second aggregate material has been found to have a mean of < +0.01 %. The bias of individual test values from the same aggregate material has been found with 95 % confidence to lie between -0.14 % and +0.14 %.

9.2.1.3 The bias of moisture tests overall on both aggregate materials has been found to have a mean of +0.03 %. The bias of individual test values overall from both aggregate materials has been found with 95 % confidence to lie between -0.12 % and +0.18 %.

9.2.2 Test data used to derive the above bias statements were obtained from samples dried to a constant mass in a drying oven maintained at 230 ± 9 F (110 ± 5°C). When other drying procedures are used, the bias of the results may be significantly different than that indicated above.

Note 3: These precision and bias statements were derived from aggregate moisture data provided by 17 laboratories participating in the SHRP Soil Moisture Proficiency Sample Program which is fully described in the National Research Council Report SHRP-P-619. The samples tested which relate to these statements were well-graded mixtures of fine and coarse aggregate with moisture contents ranging from air dry to saturated surface dry.

10. REPORT

Report results using WSDOT Form 422-020.

Performance Exam Checklist

Total Moisture Content of Aggregate by Drying
FOP for AASHTO T 255

Participant Name _____ Exam Date _____

Procedure Element	Yes	No
1. Representative sample of appropriate mass obtained?	_____	_____
2. Mass of clean, dry container determined?	_____	_____
3. Sample placed in container and mass determined?	_____	_____
4. Test sample mass conforms to the required mass?	_____	_____
5. Sample mass determined to 0.1 percent or 0.1 g?	_____	_____
6. Loss of moisture avoided prior to mass determination?	_____	_____
7. Sample dried by a suitable heat source?	_____	_____
8. Sample cooled prior to mass determination?	_____	_____
9. If aggregate heated by means other than a controlled oven, is sample stirred to avoid localized overheating?	_____	_____
10. Mass determined and compared to previous mass – showing less than 0.1 percent loss?	_____	_____
11. Calculations performed properly and results reported to the nearest 0.1 percent?	_____	_____

Comments: First attempt: Pass ☐ Fail ☐ Second attempt: Pass ☐ Fail ☐

_____

_____

_____

_____

_____

_____

_____

_____

_____

_____

Signature of Examiner _____

WSDOT FOP for AASHTO T 272[1]

Family of Curves — One-point Method

1. SCOPE

1.1 These methods of tests are for the rapid determination of the maximum density and optimum moisture content of a soil sample utilizing a family of curves and a one-point determination.

1.2 One-point determinations are made by compacting the soil in a mold of a given size with a 5.5-lb (2.5-kg) rammer dropped from a height of 12 in. (305 mm). Four alternate procedures are provided as follows:

Method A — A 4-in. (101.6 mm) mold; soil material passing a No. 4 (4.75-mm) sieve. Sections 4 and 5.

Method B — A 6-in. (152.4-mm) mold; soil material passing a No. 4 (4.75-mm) sieve. Sections 6 and 7.

Method C — A 4-in. (101.6 mm) mold; soil material passing a 3/4 in. (19.0-mm) sieve. Sections 8 and 9.

Method D — A 6-in. (152.4-mm) mold; soil material passing a 3/4 in. (19.0-mm) sieve. Sections 10 and 11.

1.3 The methods described herein correspond to the methods in T 99 and must be chosen accordingly; i.e., when moisture-density relationships as determined by T 99 Method C are used to form the family of curves, then Method C described in this procedure must be used for the one-point determination (Note 1).

Note 1: Direct reference to T 99 is made throughout these test methods and most terminology, apparatus and procedures are the same.

1.4 In addition, the concepts described herein are applicable to one-point determinations and moisture-density relationships as specified in T 180 with appropriate apparatus and method used as required.

1.5 The following applies to all specified limits in this standard: For the purposes of determining conformance with these specifications, an observed value or a calculated value shall be rounded off “to the nearest unit” in the last right-hand place of figures used in expressing the limiting value, in accordance with the rounding-off method of R 11, Recommended Practice for Indicating Which Places of Figures Are to Be Considered Significant in Specified Limiting Values.

1.6 The values stated in English units are to be regarded as the standard.

2. DEFINITION

2.1 A family of curves is a group of typical soil moisture-density relationships determined using T 99, which reveal certain similarities and trends characteristic of the soil type and source. Soils sampled from one source will have many different moisture-density curves, but if a group of these curves are plotted together certain relationships usually become apparent.

[1]This FOP is based on AASHTO T 217-87 (1996).

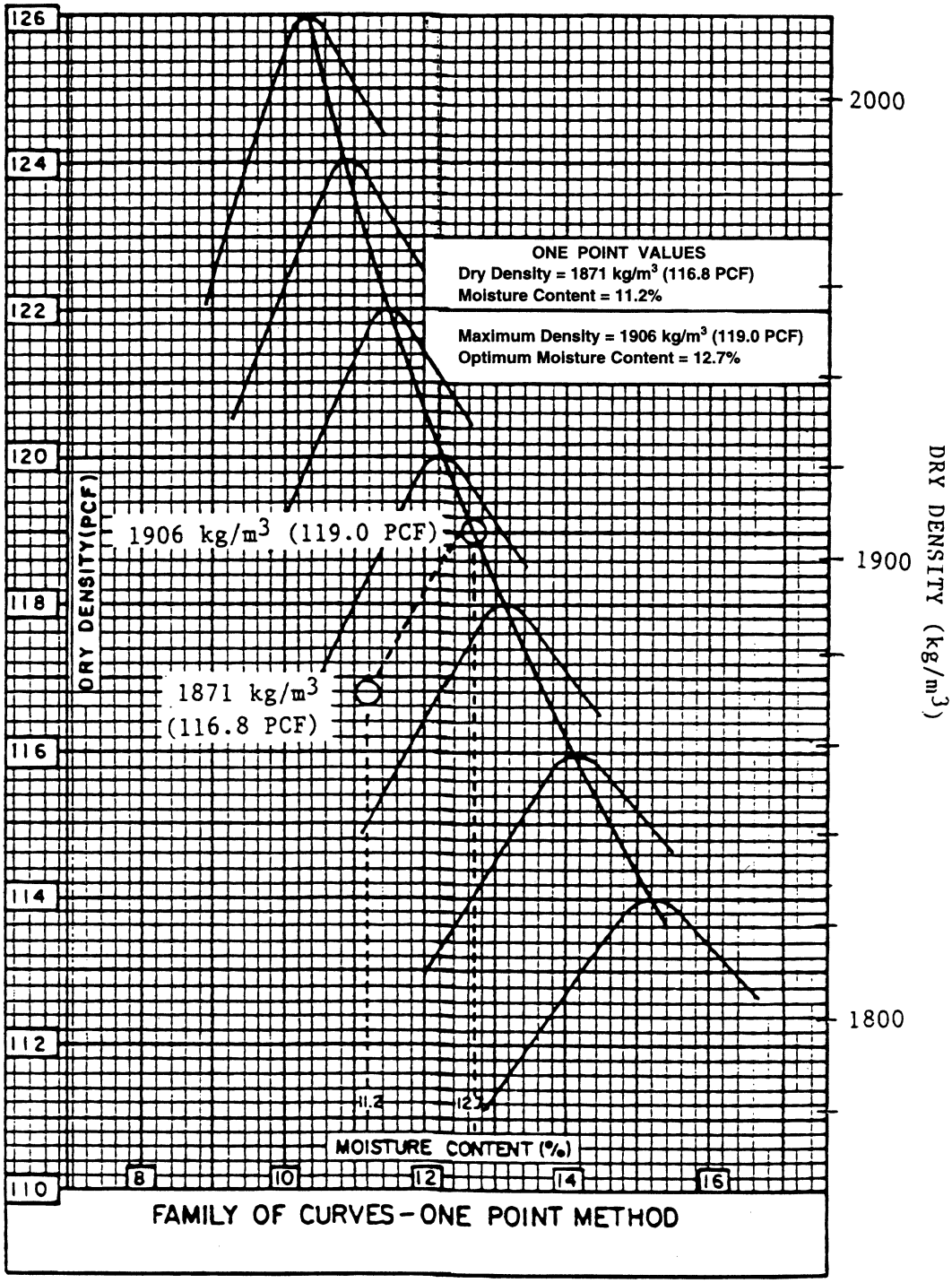

FIGURE 1 Example of Curves

In general it will be found that higher unit mass soils assume steeper slopes with maximum dry densities at lower optimum moisture contents, while the lower unit mass soils assume flatter more gently sloped curves with higher optimum moisture contents (Figure 1).

3. APPARATUS

3.1 See T 99, Section 2.

METHOD A

4. SAMPLE

4.1 See T 99, Section 3.

5. PROCEDURE

5.1 Thoroughly mix the selected representative sample with sufficient water to dampen approximately 4 percentage points below optimum moisture content. Greater accuracy in the determination of the maximum density will result as the moisture content used approaches optimum moisture content. Moisture content of the sample should never exceed the optimum water content.

5.2 Form a specimen by compacting the prepared soil in the 4-in. (101.6-mm) mold (with collar attached) in three approximately equal layers to give a total compacted depth of about 5 in. (125 mm). Compact each layer by 25 uniformly distributed blows from the rammer dropping free from a eight of 12 in. (305 mm) above the elevation of the soil when a sleeve-type rammer is used, or from 12 in. (305 mm) above the approximate elevation of compacted soil when a stationary mounted type of rammer is used. During compaction, the mold shall rest firmly on a dense uniform, rigid and stable foundation (Note 2).

Note 2: Each of the following has been found to be a satisfactory base on which to rest the mold during compaction of the soil: A block of concrete, with a mass not less than 200 lb (91 kg) supported by a relatively stable foundation; a sound concrete floor; and for field application, such surfaces as are found in concrete box culverts, bridges, and pavements.

5.2.1 Following compaction, remove the extension collar, carefully trim the compacted soil even with the top of the mold by means of the straightedge, and determine the mass of the mold and moist soil in kilograms to the nearest 5 grams, or determine the mass in pounds to the nearest 0.01 pounds. For molds conforming to tolerances given in Section 3 and masses recorded in kilograms, multiply the mass of the compacted specimen and the mold, minus the mass of the mold, by 1060, and record the result as the wet density, W_1, in kilograms per cubic meter, of compacted soil. For molds conforming to tolerances given in Section 3 and masses recorded in pounds, multiply the mass of the compacted specimen and the mold, minus the mass of the mold, by 30, and record the result as the wet density, W_1, in pounds per cubic foot, of compacted soil. For used molds out of tolerance by not more than 50 percent (Section 3), use the factor for the mold as determined in accordance with Section 8 (Calibration of Measure), AASHTO T 19.

5.3 Remove the material from the mold and slice vertically through the center. Take a representative sample of the material from one of the cut faces, determine the mass immediately, and dry ~~in an oven at 110 + 5° C (230 + 9° F), for at least 12 hours, or to a constant mass to determine the moisture content~~ in accordance with AASHTO T 255 or T 217. ~~The moisture sample shall have a mass not less than 100 g.~~

METHOD B

6. SAMPLE

6.1 Select the representative sample in accordance with Section 4, except that it shall have a mass of approximately 16 lb (7 kg).

7 PROCEDURE

7.1 Follow the same procedure as described for Method A in Section 5, except for the following: Form a specimen by compacting the prepared soil in the 6-in. (152.4-mm) mold (with collar attached) in three approximately equal layers to give a total compacted depth of about 5-in. (125 mm), each layer being compacted by 56 uniformly distributed blows from the rammer. For molds conforming to tolerances given in Section 3, and masses recorded in kilograms, multiply the mass of the compacted specimen and the mold, minus the mass of the mold, by 471, and record the result as the wet density, W1, in kilograms per cubic meter of compacted soil. For molds conforming to tolerances given in Section 3, and masses recorded in pounds, multiply the mass of the compacted specimen and the mold, minus the mass of the mold, by 13.33, and record the result as the wet density, W_1, in pounds per cubic foot, of the compacted soil. For used molds out of tolerance by not more than 50 percent (Section 3), use the factor for the mold as determined in accordance with Section 8 (Calibration of Measure), AASHTO T 19.

METHOD C

8. SAMPLE

8.1 If the soil sample is damp when received from the field, dry it until it becomes friable under a trowel. Drying bay be in air or by use of drying apparatus such that the temperature does not exceed 140°F (60°C). Then thoroughly break up the aggregations in such a manner as to avoid reducing the natural size of individual particles.

8.2 Sieve an adequate quantity of the representative pulverized soil over the 3/4 in. (19.0-mm) sieve. Discard the coarse material, if any, retained on the 3/4 in. (19.0-mm) sieve (Note 3).

Note 3: If it is advisable to maintain the same percentage of coarse material (passing a 2 in. (50-mm) sieve and retained on a No. 4 (4.75-mm) sieve) in the moisture-density sample as in the original field sample, the material retained on the 3/4 in. (19.0-mm) sieve shall be replaced as follows: Sieve an adequate quantity of the representative pulverized soil over the 2 in. (50-mm) and 3/4 in. (19.0-mm) sieves. Determine the mass of the material passing the 2 in. (50-mm) sieve and retained on the 3/4 in. (19.0-mm) sieve and replace it with an equal mass of material passing the 3/4 in. (19.0-mm) sieve and retained on the No. 4 (4.75-mm) sieve. Take the material for replacement from the remaining portion of the sample.

8.3 Select a representative sample having a mass of approximately 12 lb (5 kg) or more of the soil prepared as described in Sections 8.1 and 8.2.

9. PROCEDURE

9.1 Thoroughly mix the selected representative sample with sufficient water to dampen it to approximately 4 percentage points below optimum moisture content. Greater accuracy in the determination of the maximum density will result as the moisture content used approaches the optimum moisture content.

9.2 Form a specimen by compacting the prepared soil in the 4-in. (101.6-mm) mold (with collar attached) in three approximately equal layers to give total compacted depth of about 5 in. (125 mm). Compact each layer by 25 uniformly distributed blows from the rammer dropping free from a height of 12 in. (305 mm) above the elevation of the soil when a sleeve-type rammer is used or from 12 in. (305 mm) above the approximate elevation of each finely compacted layer when a stationary mounted type rammer is used. During compaction, the mold shall rest firmly on a dense, uniform, rigid and stable foundation (Note 2).

9.2.1 Following compaction, remove the extension collar and carefully trim the compacted soil even with the top of the mold by means of the straightedge. Holes developed in the surface by removal of coarse material shall be patched with smaller size material. Determine the mass of the mold and moist soil in kilograms to the nearest 5 grams, or determine the mass in pounds to the nearest 0.01 pounds. For molds conforming to tolerances given in Section 3 and masses recorded in kilograms, multiply the mass of the compacted specimen and the mold, minus the mass of the mold, by 1060, and record the result as the wet density, W_1, in kilograms per cubic meter of compacted soil. For molds conforming to tolerances given in Section 3 and masses recorded in pounds, multiply the mass of the compacted specimen and the mold, minus the mass of the mold, by 30, and record the result as the wet density, W_1, in pounds per cubic foot, of compacted soil. For used molds out of tolerance by not more than 50 percent (Section 3), use the factor for the mold as determined in accordance with Calibration of Measure in AASHTO T-19.

9.3 Remove the material from the mold and slice vertically through the center. Take a representative sample of the material from one of the cut faces, determine the mass immediately and dry to a constant mass using a drying apparatus described in Section 3 to determine the moisture content. The moisture sample shall have a mass not less than 500 g.

METHOD D

10. SAMPLE

10.1 Select the representative sample in accordance with Section 8.3 except that it shall have a mass of approximately 25 lb (11 kg).

11. PROCEDURE

11.1 Follow the same procedure as described for Method C in Section 9, except for the following: Form a specimen by compacting the prepared soil in the 6-in. (152.4-mm) mold (with collar attached) in three approximately equal layers to give a total compacted depth of about 5 in. (125 mm), each layer being compacted by 56 uniformly distributed blows from the rammer. For molds conforming to tolerances given in Section 3, and masses recorded in kilograms, multiply the mass of the compacted specimen and the mold, minus the mass of the mold, by 471, and record the result as the wet density, W_1, in kilograms per cubic meter, of compacted soil. For molds conforming to tolerances given in Section 3, and masses recorded in pounds, multiply the mass of the compacted specimen and the mold, minus the mass of the mold, by 13.33, and record the result as the wet density, W_1, in pounds per cubic foot, of the compacted soil. For used molds out of tolerance by not more than 50 percent (Section 3), use the factor for the mold as determined in accordance with Section 8 (Calibration of Measure), AASHTO T 19.

CALCULATIONS AND REPORT

12. CALCULATIONS

12.1 See T 99, Section 11.

13. MAXIMUM DENSITY AND OPTIMUM MOISTURE CONTENT DETERMINATION

13.1 The calculations in Section 12.1 shall be made to determine the moisture content and corresponding over-dry density (mass) in pounds per cubic foot (kilograms per cubic meter) of the compacted specimen. The dry density (unit mass) of the soil shall be plotted as ordinate and the corresponding moisture content as the abscissa to define one-point within or on the family of curves (Figure 1).

13.2 If the one-point falls on one of the curves in the family of curves the maximum dry density and optimum moisture content defined by that curve shall be used (Note 4).

13.3 If the one-point falls within the family but not on a curve, a new curve shall be drawn through the plotted one-point parallel and in character with the nearest existing curve in the family of curves. The maximum dry density and optimum moisture content as defined by the new curve shall be used (Note 4).

Note 4: If the one-point plotted within or on the family of curves does not fall in the 80 to 100 percent of optimum moisture range, compact another specimen, using the same material, at an adjusted moisture content that will place the one-point within this range.

13.3.1 If the family of curves is such that the profile of a new curve to be drawn through a one-point is not well defined or in any way questionable, then a full moisture-density relationship shall be made for the soil in question to correctly define the new curve and verify the applicability of the family of curves (Note 5).

Note 5: New curves drawn through plotted one-point determinations shall not become a permanent part of the family of curves until verified by a full moisture-density relationship.

14. REPORT

14.1 The report shall include the following:

14.1.1 The method used (Method A, B, C, or D).

14.1.2 The optimum moisture content as a percentage to the nearest whole number.

14.1.3 The maximum density to the nearest 1.0 lb/ft^3 (0.5 kg/m^3).

14.1.4 In Methods C and D indicate if the material retained on the $^3/_4$-in. (19.0-mm) sieve was removed or replaced.

14.1.5 Type of face if other than 2-in. (50.8-mm) circular.

Note 6: Inherent variability of soils places limitations on this method of test. The person using this test method must realize this and become thoroughly familiar with the material being tested. Knowledge of the AASHTO Soil Classification System and ability to recognize the gradation of soils are requirements for this work.

APPENDIX

DEVELOPING A MOISTURE-DENSITY FAMILY OF CURVES

The purpose of the family of curves is to represent the average moisture-density characteristics of the material. The family must, therefore, be based on moisture-density relationships which adequately represent the entire mass range and all types of material for which the family is to be used. It may be that particular soil types have moisture-density relationships that differ considerably and cannot be represented on one general family of curves; in this case a separate family may be developed. Also, moisture-density relationships for material of widely varying geologic origins should be carefully examined to determine if separate families are required.

When a small number of moisture-density relationships re being used to develop a family of curves, plot the point representing the maximum density and optimum moisture content for each relationship on a single sheet of graph paper. Draw a smooth curve which as closely as possible connects all these points. This line will define the maximum density and optimum moisture content of the material represented by this family of curves. At 2-lb (1-kg) increments draw moisture-density curves with slopes similar to the slopes of the original moisture-density relationships. Slopes should gradually steepen going from low to high maximum density material.

When a great number of moisture-density relationships are available, the above procedure can be modified by using average values. Tabulate the maximum density, optimum moisture content, and slope for all moisture-density relationships in each 2-lb (1-kg) increment of density. Average the maximum densities and optimum moisture contents for each increment and plot these values. As before, draw a smooth curve which as closely as possible connects all these points. Determine the average slope for each increment, and at each 2-lb (1-kg) increment draw a moisture-density curve using this average slope value. A computer, if available, may be used to accomplish this work.

The accuracy of a family of curves can be checked by comparing the maximum density and optimum moisture content from an individual moisture-density relationship with that obtained using the One-Point Method and family of curves. A point representing 80 percent of optimum moisture content is taken from the individual moisture-density relationship and used as described in the One-Point Method to determine the maximum density and optimum moisture content from the family of curves. These values are compared with the values from the individual moisture-density relationship. The difference represents the maximum variance expected when the One-Point Method and family of curves are used for material represented by that individual moisture-density relationship. This comparison should be made for all types of material over the mass range of the family. Based on these results some adjustments may be necessary to the family and/or it may be recognized that the family is not applicable to some types of material. Families based on relatively few moisture-density relationships will generally require the closest scrutiny since it can be expected that a larger number of relationships will give better average conditions.

Performance Exam Checklist

Family of Curves — One-point Method
FOP for AASHTO T 272

Participant Name _____ Exam Date _____

Procedure Element	Yes	No
1. One-point determination of dry density and corresponding moisture content made in accordance with the FOP for AASHTO T 99, AASHTO T 180, or WAQTC TM 9?	_____	_____
a. Correct size No 4 or 3/4 in. (4.75 mm or 19.0 mm) material used?	_____	_____
b. Correct number of blows per layer used (25 or 56)?	_____	_____
c. Correct number of layers used (3, 4, or 5)?	_____	_____
d. Moisture content determined in accordance with FOP for AASHTO T255/T265 or AASHTO T 217?	_____	_____
2. One-point plotted on family of curves supplied?	_____	_____
3. One-point falls within 80 to 100 percent of optimum moisture content in order to be valid?	_____	_____
4. If one-point does not fall within 80 to 100 percent of optimum moisture content, another one-point determination with an adjusted water content is made?	_____	_____
5. Maximum dry density and corresponding optimum moisture content correctly estimated?	_____	_____

Comments: First attempt: Pass ☐ Fail ☐ Second attempt: Pass ☐ Fail ☐

_____

_____

_____

_____

_____

_____

_____

_____

_____

Signature of Examiner _____

WSDOT Test Method No. 308[1]

Determining the Asphalt Binder Content of Hot Mix Asphalt (HMA) by the Ignition Method

1. SCOPE

1.1 This test method covers the determination of asphalt binder content of HMA mixtures by ignition of the asphalt binder at 538°C (1000°C) or less in a furnace. The aggregate remaining after burning can be used for sieve analysis using AASHTO T30.

1.2 The values in English units are to be regarded as the standard.

1.3 *This standard may involve hazardous materials, operations, and equipment. This standard does not purport to address all of the safety problems associated with its use. It is the responsibility of whoever uses this standard to consult and establish appropriate safety and health practices and determine the applicability of regulatory limitations prior to use.*

2. REFERENCED DOCUMENTS

2.1 *AASHTO Standards*

M 231	Weighing Devices Used in the Testing of Materials
T 2	Sampling of Aggregates
T 30	Mechanical Analysis of Extracted Aggregate
T 40	Sampling Bituminous Materials
T 110	Moisture or Volatile Distillates in Bituminous Paving Mixtures
T 168	Sampling Bituminous Paving Mixtures
T 248	Reducing Samples of Aggregate to Testing Size

2.2 *Manufacturer's Instruction Manual*

2.3 *WSDOT Standards*

FOP for WAQTC TM 6	Moisture Content of Bituminous Mixes by Oven
FOP for AASHTO T 168	Sampling Bituminous Paving Materials
WSDOT 712	Reducing Samples of Hot Mix Asphalt to Testing Size

3. SUMMARY OF TEST METHOD

3.1 The asphalt binder in the paving mixture is ignited using the furnace equipment applicable to the particular method. The asphalt binder content is calculated as the difference between the initial mass of the asphalt mixture and the mass of the residual aggregate, the calibration factor, and moisture content. The asphalt content is expressed as mass percent of moisture-free mixture.

4. SIGNIFICANCE AND USE

4.1 This method can be used for quantitative determinations of asphalt binder content and gradation in HMA mixtures and pavement samples for quality control, specification acceptance, and mixture evaluation studies. This method does not require the use of solvents. Aggregate obtained by this test method may be used for gradation analysis according to T 30.

[1]This procedure is based on AASHTO T 308-99.

5. SAMPLING

5.1 Obtain samples of aggregate in accordance with T 2.

5.2 Obtain samples of asphalt binder in accordance with T 40.

5.3 Obtain samples of freshly produced hot-mix asphalt in accordance with T 168.

5.4 ~~The test specimen shall be the end result of quartering a larger sample taken in accordance with T 248.~~ The test specimen for asphalt content determination shall be the end result of a larger sample taken in accordance with FOP for AASHTO T 168.

5.5 ~~If the mixture is not sufficiently soft to separate with a spatula or trowel, place it in a large flat pan in an over at 12°C + 5°C (257°F + 9°F).~~ If the mixture is not sufficiently soft to separate for testing, carefully heat the mixture in an oven until sufficiently soft, not to exceed 325°F (163°C).

5.6 ~~The size of the test sample shall be governed by the nominal maximum aggregate size of the mixture and shall conform to the mass requirement shown in Table 1. When the mass of the test specimen exceeds the capacity of the equipment used, the test specimen may be dived into suitable increments, tested, and the results appropriately combined for calculation of the asphalt binder content (weighted average). Specimen sizes shall not be more than 400 g greater than the minimum recommended specimen mass.~~ The size of the test sample shall be governed by the nominal maximum aggregate size of the mixture and shall conform to the mass requirement shown in Table 1. The maximum sample size shall not exceed 4000g.

Note 1: Large samples of fine mixes tend to result in incomplete ignition of asphalt.

Table 1

Nominal Max. Agg. Size, mm	Sieve Size	Minimum Mass of Specimen, g
4.75	No. 4	1200
9.5	3/8 in.	1200
12.5	12/2 in.	1500
19.0	3.4 in.	2000
25.0	1 in.	3000
37.5	1 1/2 in.	4000

For aggregate, the nominal maximum size of particles is the largest sieve size listed in the applicable specification, upon which any material is permitted to be retained.

Note: For an aggregate specification having a generally unrestrictive gradation (i.e. wide range of permissible upper sizes), where the source consistently fully passes a screen substantially smaller than the maximum specified size, the nominal maximum size, for the purpose of defining sampling and test specimen size requirements may be adjusted to the screen, found by experience to retain no more than 5% of the materials.

6. CALIBRATION

6.1 This section has been replaced with the following:

The Calibration is to be performed according to WSDOT Standard Operating Procedure SOP 728.

Test Method A

7. APPARATUS

7.1 Ignition Furnace — A forced air ignition furnace, capable of maintaining the temperature at 1072°F (578°C), with an internal balance thermally isolated from the furnace chamber accurate to 0.1 g. The balance shall be capable of weighing a 3500 gram sample in addition to the sample baskets. A data collection system will be included so that the weight can be automatically determined and displayed during the test. The furnace shall have a built in computer program to calculate change in mass of the sample baskets and provide for the input of a correction factor for aggregate loss. The furnace shall provide a printed ticket with the initial specimen mass, specimen mass loss, temperature compensation, correction factor, corrected asphalt content (percent), test time, and test temperature. The furnace chamber dimensions shall be adequate to accommodate a sample size of 35000 grams. The furnace shall provide an audible alarm and indicator light when the sample mass loss does not exceed 0.01 percent of the total sample mass for three consecutive minutes. The furnace door shall be equipped so that the door cannot be opened during the ignition test. A method for reducing furnace emissions shall be provided. The furnace shall be vented into a hood or to the outside and, when set up properly, shall have no noticeable odors escaping into the laboratory. The furnace shall have a fan with capability to pull air through the furnace to expedite the test and to reduce the escape of smoke into the laboratory.

Note 2: The furnace shall also allow the operator to change the ending mass loss percentage to 0.02 percent.

7.2 Sample Basket(s) — of appropriate size that allows the samples to be thinly spread and allows air to flow up through and around the sample particles. Sets with two or more baskets shall be nested. The sample shall be completely enclosed with screen mesh, perforated stainless steel plate, or other suitable material.

7.2.1 Sample Basket Assembly — consisting of sample basket(s) (7.2), catch pan (7.3), and an assembly guard to secure sample basket(s) to catch pan.

Note 3: Screen mesh or other suitable material with maximum ad minimum opening of No. 8 (2.36 mm) and No. 30 (600 microns) respectively has been found to perform well.

7.3 Catch Pan — of sufficient size to hold the sample basket(s) so that aggregate particles and melting asphalt binder falling through the screen mesh are caught.

7.4 Oven or suitable devise — Capable of maintaining 325 ± 25°F (163 ± 14°C).

7.5 Balance — of sufficient capacity and conforming to the requirements of M231, Class G2, for weighting specimen in basket(s).

7.6 Safety Equipment — safety glasses or face shield, high temperature gloves, long sleeve jacket, a heat resistant surface capable of withstanding 1202°F (650°C) and a protective cage capable of surrounding the sample baskets during the cooling period.

7.7 Miscellaneous Equipment — a pan larger than the sample basket(s) for transferring sample after ignition, spatulas, bowls, and wire brushes.

8. TEST PROCEDURES

8.1 ~~Preheat the ignition furnace to 538°C (1000°F) or as determined in Section 6.9. Manually record the furnace temperature (set point) prior to the initiation of the test if the furnace does not record automatically.~~ Preheat the ignition furnace to 1000°F (538°C). Manually record the furnace temperature (set point) prior to the initiation of the test if the furnace does not record automatically.

8.2 ~~Oven dry the HMA sample to a constant mass at a temperature of 105 + 5°C (221 + 9°F) or determine the moisture content of the samples according to T 110.~~ Oven dry the HMA sample to a constant mass at a temperature of 325 ± 25°F (163 ± 14°C) or determine the moisture content of the samples according to FOP for WAQTC TM 6.

8.3 ~~Enter the calibration factor for the specific mix to be tested as determined in Section 6 in the ignition furnace.~~ Enter the calibration factor for the specific mix to be tested.

8.4 Weight and record the mass of the sample basket(s) and catch pan (with guards in place).

8.5 Prepare the sample as described in Section 5. Evenly distribute this sample in the sample basket(s) that have been placed in he catch plan, taking care to keep the material away from the edges of the basket. Use a spatula or trowel to level the specimen.

8.6 Weight and record the total mass of the sample, basket(s), catch pan, and basket guards. Calculate and record the initial mass of the specimen (total mass minus the mass of the specimen basket assembly).

8.7 Input the initial mass of the specimen in whole grams into the ignition furnace controller. Verify that the correct mass has been entered.

8.8 Tare or zero furnace balance, open the chamber door, and place the sample baskets in the furnace. Close the chamber door, and verify that the sample mass (including the basket(s)) displayed on the furnace scale equals the total mass recorded in Section 8.6 within ~~+ 5 g~~ ± 6 g. Differences greater than ~~5 g~~ 6 g or failure of the furnace scale to stabilize may indicate that the sample basket(s) are contacting the furnace wall. Initiate the test by pressing the start/stop button. This will lock the sample chamber and start the combustion blower.

Note 4: The furnace temperature will drop below the setpoint when the door is opened, but will recover with the door closed and when ignition occurs. Sample ignition typically increases the temperature well above the setpoint, depending on sample size and asphalt content.

Note: Operator should wear safety equipment – high temperature gloves, face shield, fire-retardant shop coat – when opening the door to load or unload the sample.

Safety Note: Do not attempt to open the furnace door until the binder has been completed burned off.

8.9 Allow the test to continue until the stable light and audible stable indicator indicate the test is complete (the change in mass does not exceed 0.01 percent for three consecutive minutes). Press the start/stop button. This will unlock the sample chamber and cause the printer to print out the test results.

Note 5: An ending mass loss percentage of 0.02 may be substituted when aggregate that exhibits an excessive amount of loss during ignition testing is used. The precision and bias statement was developed using 0.01 percent. Both precision and accuracy may be adversely affected by using 0.02.

8.10 Use the corrected asphalt binder content (percent) from the printed ticket. If a moisture content has been determined, subtract the moisture content from the printed ticket corrected asphalt content, and report the difference as the corrected asphalt binder content.

8.11 Open the chamber door, remove the sample basket assembly and place on heat resistance surface and cover with the protective cage. Allow sample to cool to room temperature (approximately 30 minutes).

Test Method B

WSDOT has deleted Method B.

11. GRADATION

11.1 Allows the specimen to cool to room temperature in the sample baskets.

11.2 Empty the contents of the baskets into a flat pan. Use a small wire sieve brush to ensure that any residual fines are removed from the baskets.

11.3 Perform the gradation analysis according to T 30.

12. REPORT

12.1 Report the test method (A or B), corrected asphalt binder content, calibration factor, temperature compensation factor (if applicable), total percent loss, sample mass, moisture content (if determined) and the test temperature. Attach the original printed tickets to the report for units with internal balances.

12.2 The asphalt percentage and aggregate gradation shall be reported on WSDOT Form 350-560.

13. PRECISION AND BIAS

13.1 Precision — Precision was determined in an NCAT round-robin study for surface mixes using Test Method A. Precision has not yet been determined for Test Method B.

Asphalt Content	**Standard Deviation, Percent**	**Acceptable Range of Two Test Results, Percent**
Single Operator Precision	0.04	0.11
Multi Lab Precision	0.06	0.17

Note 9: The precision estimates are based on 4 aggregate type, 4 replicates, and 12 laboratories participating with 0 laboratory results deleted as outlying observations. All 4 aggregates were tested in surface mixes and had relatively low absorption values.

13.2 Bias — The bias for Test Methods A and B has not been determines.

Performance Exam Checklist

Determining the Asphalt Cement Content of Hot Mix Asphalt (Hma) by the Ignition Method for AASHTO T 308

Participant Name _____ Exam Date _____

Procedure Element	**Yes**	**No**
Procedure		
1. Oven at correct temperature (538°C)?	_____	_____
2. Mass of sample baskets and catch pan recorded?	_____	_____
3. Samples evenly distributed in basket?	_____	_____
4. Mass of sample recorded?	_____	_____
Method A		
5. Enter calibration factor for specific mix design?	_____	_____
6. Initial mass entered into furnace controller?	_____	_____
7. Sample correctly placed into furnace?	_____	_____
8. Test continued until stable indicator signals?	_____	_____
9. Binder content obtained on printed ticket?	_____	_____
10. Binder content corrected for moisture?	_____	_____

Comments: First attempt: Pass ☐ Fail ☐ Second attempt: Pass ☐ Fail ☐

_____

_____

_____

_____

_____

_____

_____

_____

_____

_____

Signature of Examiner _____

WSDOT FOP for AASHTO T 309[1]

Temperature of Freshly Mixed Portland Cement Concrete

1. SCOPE

   1.1 This test method covers the determination of temperature of freshly mixed portland cement concrete.

   1.2 The values stated in English units are to be regarded separately as standard.

   1.3 *This standard does not purport to address all of the safety concerns, if any, associated with its use. It is the responsibility of the user of this standard to establish appropriate safety and health practices and determine the applicability of regulatory limitations prior to use.*

2. REFERENCED DOCUMENTS

   2.1 *AASHTO Standards:*

   T 141 Sampling Freshly Mixed Concrete

   2.2 *ASTM Standards:*

   C 172 Practice for Sampling Freshly Mixed Concrete

3. SIGNIFICANCE AND USE

   3.1 This test method provides a means for measuring the temperature of freshly mixed concrete. It may be used to verify conformance to a specified requirement for temperature of concrete.

   3.2 Concrete containing aggregate of a nominal maximum size greater than 3 in. [75 mm] may require up to 20 min for the transfer of heat from aggregate to mortar. (See ACI Committee 207.1R Report.3)

4. APPARATUS

   4.1 Container, shall be made of nonabsorptive material and large enough to provide at least 3 in. [75 mm] of concrete in all directions around the sensor of the temperature measuring device; concrete cover must also be at least three times the nominal maximum size of the coarse aggregate.

   4.2 Temperature Measuring Device — The temperature measuring device shall be capable of measuring the temperature of the freshly mixed concrete to ±1°F (± 0.5°C) throughout the entire temperature range likely to be encountered in the fresh concrete. Liquid-in-glass thermometers having a range of 0 to 120°F (-18 to 49°C) are satisfactory. Other thermometers of the required accuracy, including the metal immersion type, are acceptable.

   4.3 Partial immersion liquid-in-glass thermometers (and possibly other types) shall have a permanent mark to which the device must be immersed without applying a correction factor.

   4.4 Reference Temperature Measuring Device — The reference temperature measuring device shall be a liquid-in-glass thermometer readable to 0.5°F (0.2°C) that has been verified and calibrated. The calibration certificate or report indicating conformance to the requirements of ASTM E 77 shall be available for inspection.

[1]This FOP is based on AASHTO T 309-99.

5. CALIBRATION OF TEMPERATURE MEASURING DEVICE

5.1 Each temperature measuring device used for determining temperature of freshly mixed concrete shall be calibrated annually, or whenever there is a question of accuracy. This calibration shall be performed by comparing the readings of the temperature measuring device at two temperatures at least 27°F (15°C) apart.

5.2 Calibration of the temperature measuring devices may be made in oil or other suitable baths having uniform density if provision is made to:

5.2.1 Maintain the bath temperature constant within 0.5°F (0.2°C) during the period of the test.

5.2.2 Have both the temperature and reference temperature measuring devices maintained in the bath for a minimum of 5 min before reading temperatures.

5.2.3 Continuously circulate the bath liquid to provide a uniform temperature.

5.2.4 Slightly tap thermometers containing liquid to avoid adhesion of the liquid to the glass if the temperature exposure is being reduced.

6. SAMPLING CONCRETE

6.1 The temperature of freshly mixed concrete may be measured in the transporting equipment provided the sensor of the temperature measuring device has at least 3 in. [75 mm] of concrete cover in all directions around it.

6.2 Temperature of the freshly mixed concrete may be obtained following concrete placement using the forms as the container.

6.3 If the transporting equipment or placement forms are not used as the container, a sample shall be prepared as follows:

6.3.1 Immediately, prior to sampling the freshly mixed concrete, dampen (with water) the sample container.

6.3.2 Sample the freshly mixed concrete in accordance with Practice C 172, except that composite samples are not required if the only purpose for obtaining the sample is to determine temperature.

6.3.3 Place the freshly mixed concrete into the container.

6.3.4 When concrete contains a nominal maximum size of aggregate greater than 3 in. (75 mm), it may require 20 min before the temperature is stabilized after mixing.

7. PROCEDURE

7.1 Place the temperature measuring device in the freshly mixed concrete so that the temperature sensing portion is submerged a minimum of 3 in. (75 mm). Gently press the concrete around the temperature measuring device at the surface of the concrete so that ambient air temperature does not affect the reading.

7.2 Leave the temperature measuring device in the freshly mixed concrete for a minimum period of 2 min or until the temperature reading stabilizes, then read and record the temperature.

7.3 Complete the temperature measurement of the freshly mixed concrete within 5 min after obtaining the sample.

8. REPORT

8.1 Record the measured temperature of the freshly mixed concrete to the nearest 1°F (0.5°C).

9. PRECISION AND BIAS

9.1 The precision and bias of this test method have not been determined. A precision and bias statement will be included when sufficient test data have been obtained and analyzed.

Performance Exam Checklist

Temperature of Freshly Mixed Concrete for AASHTO T-309

Participant Name _____ Exam Date _____

Procedure Element	Yes	No
1. Obtain sample of concrete large enough to provide a minimum of 3 in. (75 mm) of concrete cover around sensor in all directions?	_____	_____
2. Use calibrated thermometer:		
• Accurate to ±1°F (±0.5°C)?	_____	_____
• Temperature range from 0 to 12°F (-18 to 49°C)?	_____	_____
3. Place thermometer in sample with a minimum of 3 in. (75 mm) cover around sensor?	_____	_____
4. Gently press concrete around thermometer?	_____	_____
5. Read temperature after a minimum of 2 minutes or when temperature reading stabilizes?	_____	_____
6. Complete temperature measurement within 5 minutes of obtaining sample?	_____	_____
7. Record temperature to nearest 1°F (0.5°C)?	_____	_____

Comments: First attempt: Pass ☐ Fail ☐ Second attempt: Pass ☐ Fail ☐

_____

_____

_____

_____

_____

_____

_____

_____

_____

_____

Signature of Examiner _____

WSDOT FOP for AASHTO T 310[1]

In-Place Density and Moisture Content of Soil and Soil-Aggregate by Nuclear Methods (Shallow Depth)

1. SCOPE

1.1 This test method describes the procedure for determining the in-place density and moisture of soil and soil-aggregate by use of nuclear equipment. The density of the material may be determined by either direct transmission, backscatter, or backscatter/air-gap ratio method. The preferred method for determining density is by direct transmission. The moisture of the material is determined only from measurements taken at the surface of the soil (i.e., Backscatter).

1.2 *Density* — The total or wet density of soil and soil-rock mixtures is determined by the attenuation of gamma radiation where the source or detector is placed at a known depth up to 300 mm (12 in.) while the detector(s) or source remains on the surface (Direct Transmission Method) or the source and detector(s) remain on the surface (Backscatter Method).

1.2.1 The density in mass per unit volume of the material under test is determined by comparing the detected rate of gamma radiation with previously established calibration data.

1.3 Moisture — The moisture content of the soil and soil-rock mixtures is determined by thermalization or slowing of fast neutrons where the neutron source and the thermal neutron detector both remain at the surface.

1.3.1 The water content in mass per unit volume of the material under test is determined by comparing the detection rate of thermalized or slow neutrons with previously established calibration data.

1.4 *SI Units* — The values stated in SI units are to be regarded as the standard. The inch-pound equivalents may be approximate. It is common practice in the engineering profession to concurrently use pounds to represent both a unit of mass (lbf) and of force (lbm). This implicitly combines two systems of units, that is, the absolute system and the gravitational system.

1.4.1 This standard has been written using the absolute system for water content (kilograms per cubic meter) in SI units. Conversion to the gravitational system of unit weight in lbf/ft.^{3} may be made. The recording of water content in pound-force per cubic foot should not be regarded as non-conformance with this standard although the use is scientifically incorrect.

1.4.2 In the SI system, the pound (lbf) represents a unit of force (weight). However, the use of balances or scales recording pounds of mass (lbm), or recording of density (lbm/ft.^{3}) should not be regarded as nonconformance with this standard.

1.5 This standard does not purport to address all of the safety problems, if any, associated with its use. It is the responsibility of the user of this standard to establish appropriate safety and health practices and determine the applicability of regulatory limitations prior to use. See Section 6. Hazards.

[1]This FOP is based on AASHTO T 310-00.

2. REFERENCED DOCUMENTS

2.1 *AASHTO Standards:*

T 99 Moisture-Density Relations of Soils Using a 2.5-kg (5.5-lb) Rammer and a 305-mm (12-in.) Drop

T 180 Moisture-Density Relations of Soils Using a 4.54-kg (10-lb) Rammer and a 457-mm (18-in.) Drop

T 191 Density of Soil In-Place by the Sand-Cone Method

T 217 Determination of Moisture in Soils by Means of a Calcium Carbide Gas Pressure Moisture Tester

T 224 Correction for Coarse Particles in the Soil Compaction Test

T 255 Total Evaporable Moisture Content of Aggregate by Drying

T 265 Laboratory Determination of Moisture Content of Soils

T 272 Family of Curves – One-Point Method

2.2 *ASTM Test Method:*

D 2216 Laboratory Determination of Moisture Content of Soil

3. SIGNIFICANCE

3.1 The test method described is useful as a rapid, nondestructive technique for the in-place determination of the wet density and water content of soil and soil-aggregate.

3.2 The test method is used for quality control and acceptance testing of compacted soil and rock for construction and for research and development. The non-destructive nature allows repetitive measurements at a single test location and statistical analysis of the results.

3.3 *Density* — The fundamental assumptions inherent in the methods are that Compton scattering is the dominant interaction and that the material under test is homogeneous.

3.4 *Moisture* — The fundamental assumptions inherent in the test method are that the hydrogen present is in the form of water as defined by ASTM D 2216, and that the material under test is homogeneous.

3.5 Test results may be affected by chemical composition, sample heterogeneity, and, to a lesser degree, material density and the surface texture of the material being tested. The technique also exhibits spatial bias in that the apparatus is more sensitive to water contained in the material in close proximity to the surface and less sensitive to water at deeper levels.

4. INTERFERENCES

4.1 *In-Place Density Interferences*

4.1.1 The chemical composition of the sample may affect the measurement, and adjustments may be necessary.

4.1.2 The instrument is more sensitive to the density of the material in close proximity to the surface in the Backscatter Method.

Note 1: The nuclear gauge density measurements are somewhat biased to the surface layers of the soil being tested. This bias has largely been corrected out of the Direct Transmission Method and any remaining bias is insignificant. The Backscatter Method is still more sensitive to the material within the first several inches from the surface.

4.1.3 Oversize rocks or large voids in the source-detector path may cause higher or lower density determination. Where lack of uniformity in the soil due to layering, rock or voids is suspected, the test site should be dug up and visually examined to determine if the test material is representative of the full material in general and if rock correction is required.

4.1.4 The sample volume is approximately 0.10 ft.^{3} (0.0028 m^3) for the Backscatter Method and 0.20 ft.^{3} (0.0057 m^3) for the Direct Transmission Method when the test depth is 6 in. (150 mm). The actual sample volume is indeterminate and varies with the apparatus and the density of the material. In general, the higher the density the smaller the volume.

4.1.5 Other radioactive sources must not be within 30 ft. (10 m) of equipment in operation.

4.2 *In-Place Moisture Content Interferences*

4.2.1 The chemical composition of the sample may dramatically affect the measurement and adjustments may be necessary. Hydrogen in forms other than water, as defined by ASTM D 2216, and carbon will cause measurements in excess of the true value. Some chemical elements such as boron, chlorine, and minute quantities of cadmium will cause measurements lower than the true value.

4.2.2 The water content determined by this test method is not necessarily the average water within the volume of the sample involved in the measurement. The measurement is heavily influenced by the water content of the material closest to the surface. The volume of soil and rock represented in the measurement is indeterminate and will vary with the water content of the material. In general, the greater the water content of the material, the smaller the volume involved in the measurement. At 10 lbs/ft.^{3} (160 kg/m^3), approximately 50 percent of the typical measurement results from the water content of the upper 2 to 3 in. (50 to 75 mm).

4.2.3 Other neutron sources must not be within 10 m (30 ft.) of equipment in operation.

5. APPARATUS

5.1 *Nuclear Density/Moisture Gauge* — While exact details of construction of the apparatus may vary, the system shall consist of:

5.1.1 A sealed source of high energy gamma radiation such as cesium or radium.

5.1.2 *Gamma Detector* — Any type of gamma detector such as a Geiger-Mueller tube(s).

5.2 *Fast Neutron Source* — A sealed mixture of a radioactive material such as americium, radium, or californium-252 and a target material such as beryllium.

5.3 *Slow Neutron Detector* — Any type of slow neutron detector such as boron trifluoride or helium-3 proportional counter.

5.4 *Reference Standard* — A block of material used for checking instrument operation, correction of source decay, and to establish conditions for a reproducible reference count rate.

5.5 *Site Preparation Device* — A plate, straightedge, or other suitable leveling tool which may be used for planning the test site to the required smoothness, and in the Direct Transmission Method, guiding the drive pin to prepare a perpendicular hole.

5.6 *Drive Pin* — A pin not to exceed the diameter of the rod in the Direct Transmission Instrument by more than 1/8 in. (3 mm), used to prepare a hole in the material under test for inserting the rod.

5.7 *Drive Pin Extractor* — A tool that may be used to remove the drive pin in a vertical direction so that the pin will not distort the hole in the extraction process.

5.7.1 A slide hammer, with a drive pin attached, may also be used both to prepare a hole in the material to be tested and to extract the pin without distortion to the hole. In place of a slide hammer a hammer of significant size and weight for preparing a hole in the material to be tested using the drive pin along with an extraction tool.

6. HAZARDS

6.1 This equipment utilizes radioactive materials that may be hazardous to the health of the users unless proper precautions are taken. Users of this equipment must become familiar with applicable safety procedures and government regulations.

6.2 Effective user instructions together with routine safety procedures, such as source leak tests, recording and evaluation of film badge data, etc., are a recommended part of the operation and storage of this instrument.

7. CALIBRATION

7.1 Calibration of the instrument will be in accordance with Appendix A2 and A3.

8. STANDARDIZATION

8.1 All nuclear density/moisture gauges are subject to long-term aging of the radioactive sources, detectors, and electronic systems, which may change the relationship between count rates and the material density and water content. To offset this aging, instruments are calibrated as a ratio of the measurement count rate to a count rate made on a reference standard or to an air-gap count (for the backscatter/air-gap ratio method). The reference count rate should be in the same or higher order of magnitude than the range of measurement count rates over the useful range of the equipment.

8.2 Standardization of equipment on the reference standard is required at the start of each day's use and a permanent record of these data shall be retained. ~~The standardization shall be performed with the equipment at least 10 m (30 ft.) away from other nuclear density/moisture gauges and clear of large masses of water or other items which may affect the reference count rates.~~ The standardization shall be performed with the equipment away from other radioactivity devices, large masses of water and large vertical surfaces at the manufacture's recommended distance. Standard counts should be taken in the same environment as the actual measurement counts.

8.2.1 Turn on the instrument and allow for stabilization according to the manufacturer's recommendations. If the instrument is to be used either continuously or intermittently during the day, it is best to leave it in the "power on" condition to prevent having to repeat the stabilization (refer to manufacturer recommendations). This will provide more stable, consistent results.

8.2.2 ~~Using the reference standard take at least four repetitive readings at the normal measurement period and obtain the mean. If available on the instrument, one measurement of four or more times the normal period is acceptable. This constitutes one standardization check.~~ Using the reference standard block supplied with the density/moisture gauge perform standardization using manufacture's recommendations.

Use the procedure recommended by the gauge manufacturer for determining compliance with the gauge calibration curves. Without specific recommendations for the gauge manufacturer, use the procedure in 8.2.3.

8.2.3 If the mean of the four repetitive readings is outside the limits set by Equation 1, repeat the standardization check. If the second standardization check satisfies Equation 1, the equipment is considered in satisfactory operating condition. If the second standardization check does not satisfy Equation 1, the instrument should be checked and verified according to Appendix A2 and A3, sections A2.8 and A3.5. If the verification shows that there is no significant change in the calibration curve, a new reference standard count, N_o, should be established. If the calibration check shows that there is a significant difference in the calibration curve, repair and recalibrate the instrument.

$$N_s = N_o \pm 1.96\ v\ (N_o/F) \quad \text{(Eq. 1)}$$

where:

N_s = value of current standardization count,

N_o = Average of the past four values of N_s taken for prior usage,

F = factory pre-scale factor (contact gauge manufacturer for the factor).

9. PROCEDURE

9.1 Turn on and allow the equipment to stabilize (warm up) according to the manufacturer's recommendations (see 8.2.1). Prior to performing density test verify that today's Standardization Count has been preformed. Select a test location where the gauge will be at least 6 in. (150 mm) away from any vertical mass. If closer than 24 in. (600 mm) to a vertical mass, such as in a trench, follow gauge manufacturer correction procedures.

9.2 Prepare the test site in the following manner:

9.2.1 Remove all loose and disturbed material and additional material as necessary to expose the tope of the material to be tested.

Note 2: The spatial bias should be considered in determining the depth at which the gauge is to be seated.

9.2.2 Prepare a horizontal area sufficient in size to accommodate two gauge readings that will be 90° to each other ~~the gauge~~, by planning the area to a smooth condition so as to obtain maximum contact between the gauge and material being tested.

9.2.3 The maximum void beneath the gauge shall not exceed 1/8 in. (3 mm). Use native fines or fine sand to fill the voids and smooth the surface with a rigid plate or other suitable tool. The depth of the filler should not exceed approximately 1/8 in. (3 mm).

Note 3: The placement of the gauge on the surface of the material to be tested is critical to the successful determination of density. The optimum condition is total contact between the bottom surface of the gauge and the surface of the material being tested. When optimal conditions are not present, correct surface irregularities by the use of sand or similar filler material. The total area filled should not exceed 10 percent of the bottom area of the gauge. Several trial seatings may be required to achieve these conditions.

9.3 ~~Turn on and allow the equipment to stabilize (warm up) according to the manufacturer's recommendations (see 8.2.1).~~

9.4 Backscatter or Backscatter/Air-Gap Ratio Method of In-Place Nuclear Density & Moisture Content

This Section has been deleted

9.5 *Direct Transmission Method of In-Place Nuclear Density & Moisture Content*

9.5.1 Select a test location where the gauge in test position will be at least the minimum distance recommended by the manufacture ~~150 mm (6 in.)~~ away from any vertical projection. If gauge will be within the minimum distance recommended by the manufacture follow instructions outlined by manufactures instruction manual.

9.5.2 Make a hole perpendicular to the prepared surface using the guide and the hole-forming device (Section 5). The hole shall be a minimum of 2 in. (50 mm) deeper than the desired measurement depth and of an alignment that insertion of the probe will not cause the gauge to tilt from the plane of the prepared area.

9.5.3 Mark the test area to allow the placement of the instrument over the test site and to allow the alignment of the source rod to the hole.

9.5.4 Remove the hole forming device carefully to prevent the distortion of the hole, damage to the surface, or loose material to fall into the hole.

9.5.5 Place the instrument on the material to be tested, making sure of maximum surface contact as described above.

9.5.6 Lower the source rod into the hole to the desired test depth. Pull gently on the gauge in the direction that will bring the side of the probe to face the center of the gauge so that the probe is in intimate contact with the side of the hole in the gamma measurement path.

Note 4: Do not extend a rod containing radioactive sources out of its shielded position prior to placing it onto the test site. Always align the instrument so as to allow placing the rod directly into the test hole from the shielded position.

9.5.7 Keep all other radioactive sources at least 30 ft. (10 m) away from the gauge to avoid affecting the measurement.

9.5.8 If the gauge is so equipped, set the depth selector to the same depth as the probe before recording the automated (gauge computed densities, moisture contents, and weights) values.

9.5.9 ~~Secure and record one or more 1-minute readings (see Note 5).~~ Secure and record one, one minute reading then turn the gauge 90° and perform another one reading. Record both readings if the two readings are within 3 lbm/cf (50 kg/cm) of each other (see note 5).

9.5.10 Determine the in-place wet density by use of the calibration curve previously established or read the gauge directly if so equipped.

Note 5: ~~The gauge may be rotated about the axis of the probe to obtain additional readings.~~ If two readings are not within tolerances stated, rotate gauge 90o and retest. Again compare both readings. If these reading are still not within tolerances stated move to another location to perform test.

10. CALCULATION OF RESULTS

10.1 ~~If dry density is required, the in-place water content may be determined by using the nuclear methods described herein; gravimetric samples and laboratory determination; or other approved instrumentation.~~ The moisture content needs to be determined by AASHTO T 217 or T 255.

~~10.1.1 If the water content is determined by nuclear methods, use the gauge readings directly, or subtract the kg/m³ (lbm/ft.³) of moisture from the kg/m³ (lbm/ft.³) of wet density, and obtain dry density inkg/m³ (lbm/ft.³).~~

10.1.2 If the water content is determined by other methods, and is in the form of percent, proceed as follows:

$$d = \frac{100}{100+W}(m) \quad \text{(Eq. 2)}$$

where:

d = dry density in lbm/ft.³ (kg/m³),

m = wet density in lbm/ft.³ (kg/m³),

and

W = water as a percent of dry mass.

11. REPORT

11.1 The report shall include the following:

11.1.1 Standardization and adjustment data for the date of the tests.

11.1.2 Make, model and serial number of the test instrument.

11.1.3 Name of the operator(s).

11.1.4 Test site identification.

11.1.5 Visual description of material tested.

11.1.6 Test mode (backscatter or direct transmission) and test depth (if applicable).

11.1.7 Wet and dry densities in kg/m³ or unit weights in lb/ft.³

11.1.8 Water content in percent of dry mass or dry unit weight.

11.1.9 Percent Compaction

11.1.10 Name and Signature of Operator

12. PRECISION

12.1 Determine the instrument precision of the system, *P*, from the slope of the calibration curve, *S*, and the standard deviation, *ó*, of the signals (detected gamma rays or detected neutrons) in counts per minute (cpm), as follows:

$$P = ó/S \quad \text{(Eq. 3)}$$

where:

P = precision

ó = standard deviation, cpm

S = slope, cpm/kg/m^3 (cpm/lb/ft.^{3})

12.2 *Density* – Determine the slope of the calibration curve at the 110 lb/ft.^{3} (1762 kg/m^3) point in counts per minute per kilogram per cubic meter (counts per minute per pound per cubic foot). Determine the standard deviation of 10 repetitive readings of 1 minute each (gauge is not moved after seating for the first count) taken on material having a density of 110.0 ± 5.0 lb/ft.^{3} (1762 kg ± 80 kg/m^3). The value of *P* shall be less than 1.25 lb/ft.^{3} (20 kg/m^3).

12.3 *Moisture* – Where the slope of the calibration curve is determined at the 10-lb/ft.^{3} (160-kg/m^3) point and the standard deviation is determined from 10 repetitive readings of 1 minute each (the gauge is not moved after the first count) taken on material having a moisture content of 10.0 ± 0.6 lb/ft.^{3} (160 ± 10 kg/m^3) the value of *P* shall be less than 0.30 lb/ft.^{3} (4.8 kg/m^3).

13. KEYWORDS

13.1 Compaction test; density; moisture content; nuclear methods; quality control; water content.

APPENDIX

A1. PERCENT COMPACTION

A1.1 To determine the percent compaction, compare the in-place dry density as determined by this method to the appropriate agency standard. See appropriate agency policy for use of density standards.

A1.2 If a representative sample of material is needed to establish a density standard such as T 272 or to determine the percent of oversized particles, after completion of the nuclear test, remove sufficient material fro the test site to perform the procedures.

A1.3 If the material tested contains oversize material as described in T 224 then a correction for wet density and water content must be applied. Use T 224 to determine these corrections.

A1.4 When using curves developed by T 99 or T 180 it may be necessary to use T 224 and T 272 to determine maximum density.

A2. WET DENSITY CALIBRATION & VERIFICATION

A2.1 Verify or re-establish calibration curves, tables, or equivalent coefficients at least once every 12 months and after repairs that may effect the instrument geometry. Newly acquired units shall be calibrated initially.

A2.2 The instrument shall be calibrated according to the manufacturers written procedures to produce a calibration response within ± 1.0 lb/ft.^{3} (± 16 kg/m^3) on standard block(s) of materials of established and constant densities. This calibration may be done by the manufacturer, the user, or an independent vendor. Nuclear instrument response is influenced by the chemical composition of measured materials. This response must be taken into account in establishing the assigned standard block density. The block(s) used for calibration shall be capable of generating a general and reliable curve covering the entire density range of the materials to be tested in the field. Then density of these standard block materials shall be determined to an accuracy of ± 0.2 percent.

A2.3 Sufficient data shall be taken on each density standard block to ensure an instrument count precision of at least one-half the instrument count precision required for field use. The data may be presented in the form of a graph, table, equation coefficients, or stored in the gauge, to allow converting the count rate data to density.

A2.4 The method and test procedures used in establishing the calibration count rate data shall be the same as those used for obtaining the field count rate data.

A2.5 The material type, actual density, and assigned standard block density of each calibration standard used to establish or verify the instrument calibration shall be stated as part of the calibration data for each measurement depth.

A2.6 The standards should be sufficient in size to not change the count rate if enlarged in any dimension.

Note A1: Minimum surface dimensions of approximately 24 X 17 in (610 mm by 430 mm), have proven satisfactory. For the backscatter method a minimum depth of 9 in (230 mm) is adequate; while for the direct transmission method the depth should be at least 2 in. (50 mm) deeper than the deepest rod penetration depth. A larger surface area should be considered for the backscatter air-gap method. For blocks with minimum width and length smaller than the sizes specified, follow block manufacturers' recommendations for proper installation and use.

A2.7 The most successful standards that have been established for calibration have been made of magnesium, aluminum, aluminum/magnesium, granite, and limestone. These standards have been used in combination with each other, with historical curve information, and with other prepared block(s) to produce accurate and reliable calibration.

A2.7.1 Standards of soil, rock, and concrete that have stable characteristics for reproducibility and uniformity are difficult to prepare. These standards may be of use for specialty verification or field calibration where local site material chemistry or background situation require special adaptation.

A2.8 Verify an existing calibration by taking a sufficient number of counts at each measurement depth on one or more blocks of established densities to ensure the accuracy of the existing calibration within ± 2.0 lb/ft.^{3} (± 32 kg/m^3) at each measurement depth.

A2.8.1 Sufficient data shall be taken to ensure an instrument count precision of at least one-half the instrument count precision required for field use.

A2.8.2 Calibration blocks used for calibration of the gauge or prepared blocks can be used to verify gauge calibration.

A2.8.2.1 Blocks prepared of soil, rock, concrete, asphalt, and engineered blocks that have characteristics of reproducible uniformity may be used, but care must be taken to minimize changes in density and water content over time.

A2.8.2.2 Density values of prepared blocks shall be determined to an accuracy of ± 0.5 percent at each measurement depth.

A2.8.3 The assigned block density for each calibration depth used to verify the instrument calibration shall be stated as part of the verification data.

A3. WATER CONTENT CALIBRATION AND VERIFICATION

A3.1 Verify or re-establish calibration curves, tables, or equivalent coefficients at least once every 12 months and after repairs that may effect the instrument geometry. Newly acquired units shall be calibrated initially.

A3.2 The instrument shall be calibrated in accordance with the manufacturers written procedures to produce a calibration response with 1 lb/ft.^{3} (16 kg/m^3) on standard block(s) of materials of established and constant moisture densities. This calibration may be done by the gauge manufacturer, the user, or an independent vendor. The block(s) used for calibration should be capable of generating a general curve covering the entire water content range of the materials to be tested in the field. The calibration curve can be established using counts and water contents of standard block, previous factory curve information or historical data. Due to the effect of chemical composition, the calibration supplied by the manufacturer with the apparatus will not be applicable to all materials. It shall be accurate for silica and water; therefore, the calibration must be verified and adjusted, if necessary, in accordance to section A3.4.

A3.3 Calibration standards may be established using any of the following methods. Prepared containers or standards must be large enough to not change the observed count rate if made larger in any dimension.

Note A2: Dimensions of approximately 24 by 18 by 14 in.(approximately 610 mm long by 460 mm wide by 360 mm deep) have proven satisfactory.

A3.3.1 Prepare a standard of hydrogenous materials having an equivalent water content determined by comparison (using a nuclear instrument) with a saturated silica sand mixture defined in ASTM Test Method D 2922. Metallic blocks used for wet density calibration such as magnesium or aluminum are convenient zero water content standard.

A3.3.2 Prepare containers of compacted material with a percent water content determined by oven dry (ASTM Test Method D 2216) and a wet density calculated from the mass of the material and the inside dimensions of the container. The water content may be calculated as follows:

$$Mm = \frac{\tilde{n} \times w}{100 + w} \quad \text{(Eq. A3.1)}$$

where:

Mm = water content, lbm/ft.^{3} or, kg/m^3

w = water content, percent of dry mass, and

ñ = wet (total) density, lbm/ft.^{3} or, kg/m^3

A3.3.3 Where neither of the previous calibration standards are available, the instrument may be calibrated by using a minimum of four selected test sites in an area of a compaction project where material has been placed at several different water contents. The test sites shall represent the range of water contents over which the calibration is to be used. At least four replicate nuclear measurements shall be made at each test site. The density at each site shall be measured by making four closely spaced determinations with calibrated equipment in accordance with ASTM Test Methods D 2922, D 1566, or D 2937. The water content of each of the density tests shall be determined by Test Method D 2216. Use the mean value of the replicate readings as the calibration point value for each site.

A3.4 *Calibration Adjustments*

A3.4.1 The calibration of newly acquired or repaired instruments shall be verified and adjusted prior to use. Calibration curves shall be checked prior to performing tests on materials that are distinctly different from material types previously used in obtaining or adjusting the calibration. Sample materials may be selected by either A3.4.1.1 or A3.4.1.2. The amount of water shall be within ± 2 percent of the water content established as optimum for compaction. Determine the water content in lb/ft.^{3} or kg/m^3 or by Eq. A3.1. A microwave oven or direct heater may be utilized for drying materials which are not sensitive to temperature, in addition to the methods listed in A3.3.3. A minimum of four comparisons is required and the mean of the observed differences used as the correction factor.

A3.4.1.1 Container(s) of compacted material taken from the test site may be prepared in accordance with A3.3.2.

A3.4.1.2 Test site(s) or the compacted material may be selected in accordance to A3.3.3.

A3.4.2 The method and test procedures used in obtaining the count rate to establish the error must be the same as those used for measuring the water content of the material to be tested.

A3.4.3 The mean value of the difference between the moisture content of the test samples as determined in A3.4.1.1 or A3.4.1.2 and the values measured with the instrument shall be used as a correction to measurements made in the field. Some instruments utilizing a microprocessor may have provision to input a correction factor that is established by the relative values of water content as a percentage of dry density, thus eliminating the need to determine the difference in mass units of water.

A3.5 Verify an existing calibration by taking sufficient number of counts on one or more blocks of established water content to ensure the accuracy of the existing calibration within ± 1 lb/ft.^{3} (± 16 kg/m^3). The water content block(s) should be prepared in accordance with section A3.3.1 and A3.3.2.

A3.5.1 Sufficient data shall be taken to ensure an instrument count precision of at least one half the instrument count precision required for field use.

A3.5.2 Calibration blocks used to establish calibration parameters and prepared blocks can be used to verify calibration.

A3.5.3 Prepared blocks that have characteristics of reproducible uniformity may be used, but care must be taken to minimize changes in density and water content over time.

A3.5.4 The assigned water content of the block(s) used for verification of the instrument shall be stated as part of he verification data.

Performance Exam Checklist

In-Place Density and Moisture Content of Soil and Soil-Aggregate by Nuclear Methods (Shallow Depth)

Participant Name _____ Exam Date _____

Procedure Element	Yes	No
1. Gauge turned on and allowed to stabilize per manufacturer's recommendations?	_____	_____
2. Gauge calibrated and standard count recorded in accordance with manufacturer's instructions?	_____	_____
3. Test location selected away from other radioactive sources, large objects, vertical projections per manufacturer's recommendations?	_____	_____
4. Loose, disturbed material removed?	_____	_____
5. Flat, smooth area prepared?	_____	_____
6. Surface voids filled with native fines ($^1/_8$ in. (3 mm) maximum thickness)?	_____	_____
7. Hole driven 2 in. (50 mm) deeper than material to be tested?	_____	_____
8. Gauge placed, probe placed, and source rod lowered without disturbing loose material?	_____	_____
9. Method A:		
a. Gauge firmly seated, and gently pulled back so that source rod is against hole?	_____	_____
b. Two, one-minute counts taken; density counts within 2 lbm/ft^3 (32 kg/m^3)?	_____	_____
c. Density and moisture data averaged?	_____	_____
10. Method B:		
a. Gauge firmly seated, and gently pulled back so that source rod is against hole?	_____	_____
b. Two, one-minute counts taken; density and moisture data averaged?	_____	_____
c. Gauge turned 90° (180° in trench)?	_____	_____
d. Gauge firmly seated, and gently pulled back so that source rod is against hole?	_____	_____

Procedure Element	Yes	No
e. Two, one-minute counts taken; density and moisture data averaged?	_____	_____
f. Density counts within 3 lbm/ft^3 (50 kg/m^3)?	_____	_____
g. Average of two tests?	_____	_____
11. Moisture sample 9 lbs (4 kg) obtained from below gauge?	_____	_____
12. Moisture content determined using FOP for AASHTO T 255 or AASHTO T 217?	_____	_____

Comments: First attempt: Pass ☐ Fail ☐ Second attempt: Pass ☐ Fail ☐

_____

_____

_____

_____

_____

_____

_____

_____

_____

_____

Signature of Examiner _____

WSDOT Test Method No. 413

Method of Test for Evaluating Waterproofing Effectiveness of Membrane and Membrane-Pavement Systems

1. SCOPE

   a. This method describes a procedure for evaluating the waterproofing effectiveness of membranes and membrane-pavement systems as applied to bridge decks. The tests can be performed on the membrane alone or on the membrane-pavement combination.

2. APPARATUS

   a. Ohmmeter — Simpson VOM Model 313 or equal; driving voltage for the range of "R × 10K" should be 1.56 ± 0.05 V.; the range of "R × 100K" should be 1.43 ± 0.05 V.

   b. No. 18 Insulated Wire — Belden test probe wire or equivalent, two spools, 250 ft. (76.2 m) each, with connectors.

   c. Metal Contact Plate — 12 × 12 × ⅛ in. (304.8 mm × 304.8 mm by 3.175 mm), with a connection for the ohmmeter and a 36-in. (914.4 mm) nonmetallic handle (see Figure 1, below).

   d. Polyurethane Sponge — 12 × 12 × 1 in. (304.8 mm × 304.8 mm by 25.4 mm), medium density (see Figure 1, below).

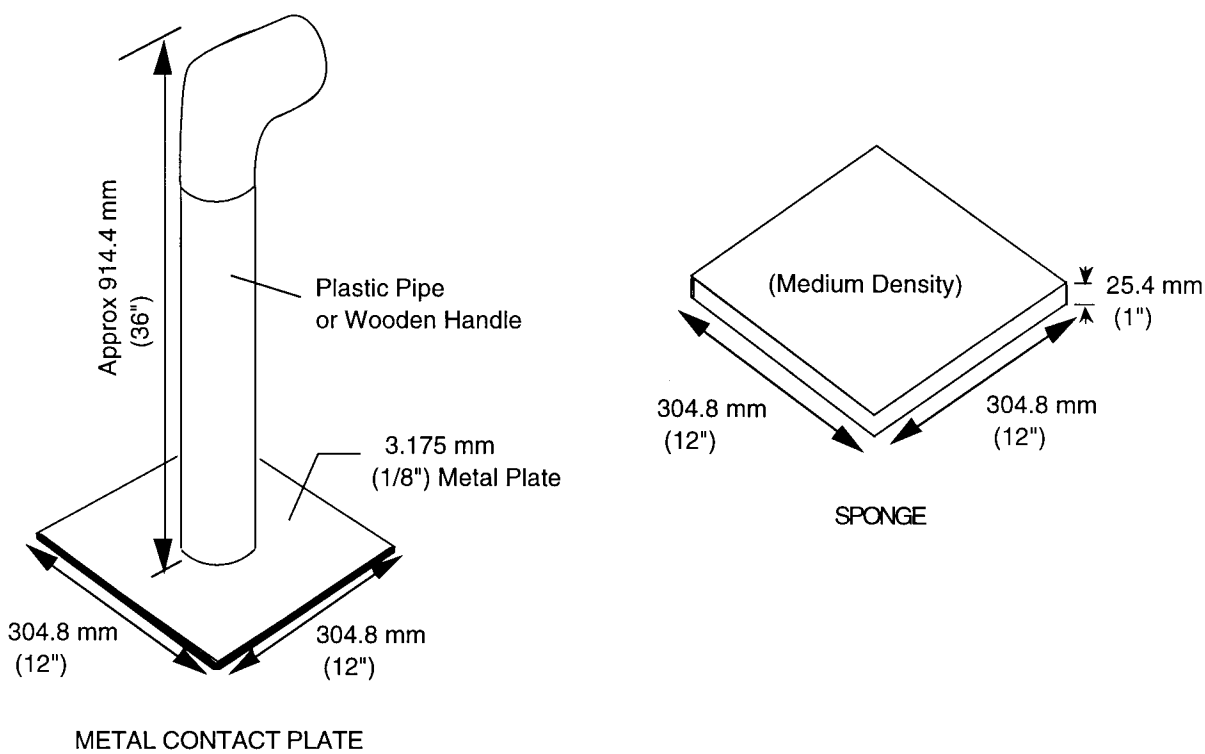

Figure 1

e. Wetting Agent — Aerosol OT (10 percent solution as manufactured by the American Cyanamid Company) or equal; mix 0.4 cup (100 ml) of wetting agent with 5 gal. (18.9 L) of water to make up wetting solution.

f. Pressure Spray Can — 3 gal. (11.4 L) capacity.

g. ¾-in. Stone Cutter's Chisel.

h. Hammer.

i. Eye Protection.

Note: Items g, h, and i are used for connection to reinforcing steel in deck (negative pole).

3. PROCEDURE

The following procedures shall be used **only** when the surface of the membrane-only system is dry or when the membrane-pavement system is judged to be dry internally. The latter condition is an important consideration since moisture will conduct electricity throughout an entire asphalt concrete overlay producing erroneous results at the individual test locations.

a. Membrane Only

(1) When the membrane has cured sufficiently to allow foot traffic on it, divide the bridge deck into a grid pattern similar to that illustrated in Figure 2. The grid spacing shall be as ordered by the Engineer, but it is suggested that the grid lines be spaced at 5 ft. (1.5 m) intervals to provide adequate test coverage. A definite connection to the top mat of reinforcing steel in the bridge deck is desirable; however, if this is not feasible, the bridge railing, expansion joints, light standards, drainage scoupers, or other exposed steel should provide the necessary connection. New bridges are supplied with connection to the reinforcing steel along each edge of the bridge via a junction box.

(2) Uncoil an ample length of wire to reach the areas to be tested and attach the negative (–) connection of the ohmmeter to the reinforcing steel and the positive (+) connection to the 12 in. × 12 in. by 1/8 in. (304.8 mm × 304.8 mm × 3.175 mm) metal contact plate. Check ohmmeter battery for satisfactory charge, then zero the ohmmeter dial indicator.

(3) Attach the polyurethane sponge to the metal plate with heavy-duty rubber bands and saturate the sponge with the wetting solution.

(4) In order to check for proper electrical connections and overall equipment operation, prewet two or three areas along the exposed concrete curb and place the measuring device at each location; read and record the resistance readings displayed on the ohmmeter. These readings will normally range from 500 to 8,000 ohms, if the connection to the reinforcing steel is good.

(5) Once the connections and equipment show proper operation, continue testing at each grid intersection and record the resistance values on photocopies of Figure 3, using blank sheets where additional space is needed.

b. Membrane-Pavement

(1) New pavement — Procedure steps 3.a.(1) through 3.a.(5) may be used in measuring the resistance of the membrane-pavement system, except that in step 3.a.(5) the test locations should be prewetted with the wetting solution. Only enough wetting solution should be used to saturate the test zone. Surface runoff should be kept to a minimum to prevent interconnecting the test zones electrically.

(2) Old Pavement — Procedure steps 3.a.(1) through 3.a.(5) may be used in measuring the resistance of the membrane-pavement system, except that tin step 3.a.(5) a checkpoint should be selected at a grid intersection that appears dense-graded and well compacted. Saturate the check point with the wetting solution. Keep surface runoff to a minimum to prevent interconnecting the test zones electrically. Take resistance readings at the checkpoint until the value has stabilized at its lowest point. The penetration process should not required more than 15 to 20 minutes. If its takes more than 20 minutes, select a reasonable penetration time and saturate each grid intersection thereafter for that length of time.

4. REPORTING

a. Report the resistance values for the exposed membrane and the membrane-pavement system on photostatic copies of Figure 3, using blank sheets where additional space is needed.

b. Copies of the report are to be submitted to the following offices:

(1) Project Engineer (for final records).

(2) FOSSC Materials Laboratory (master file).

5. ACCEPTANCE LEVEL

Refer to the Contract Special Provisions under the section entitled “Membrane Waterproofing (Deck Seal).”

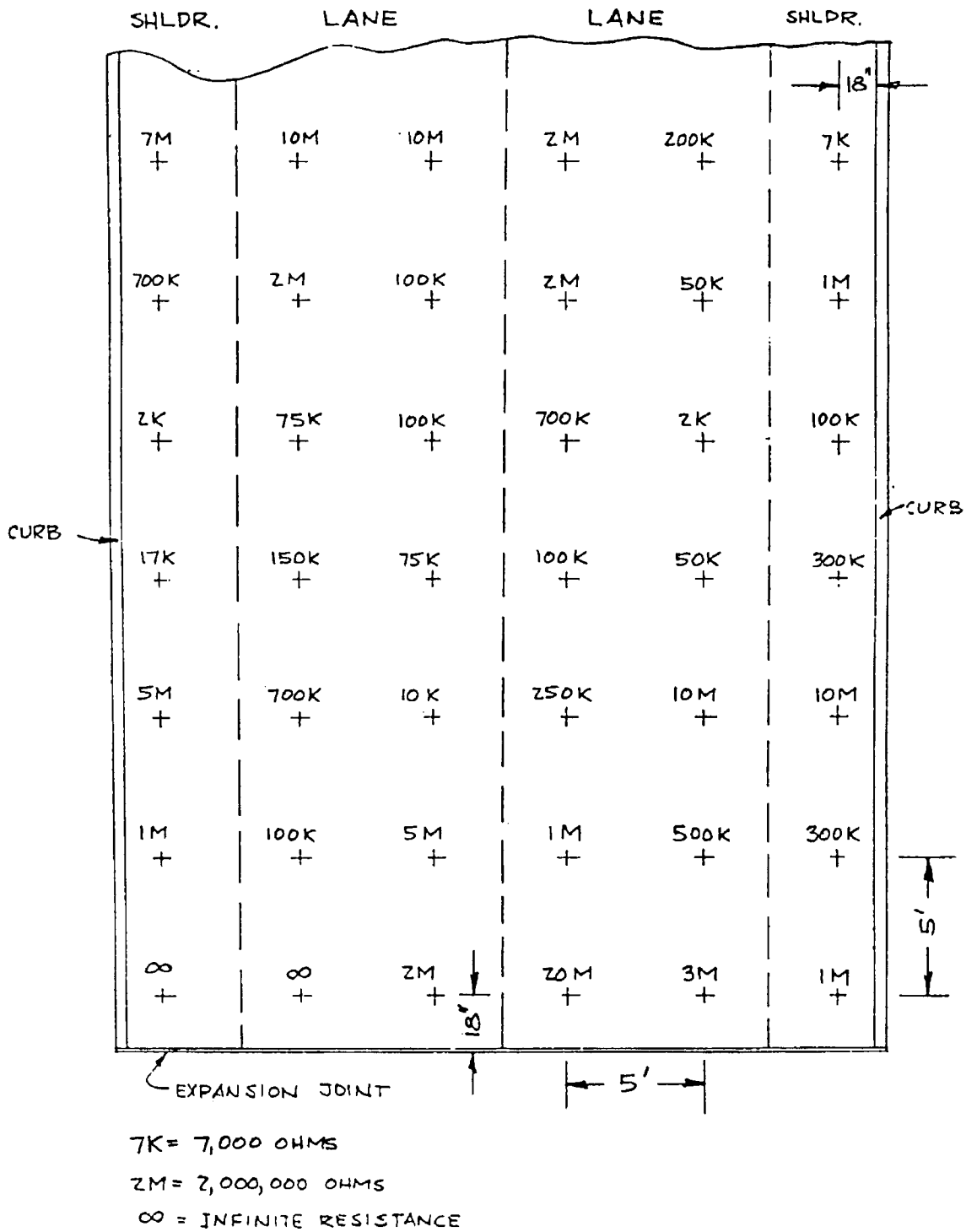

Figure 2: Example of Test Grid and Resistance Tabulation

ELECTRICAL RESISTIVITY MEASUREMENTS
(WDOT Test Method No. 413)

SR____ CONTRACT_____ BRIDGE _____ BR. NO.____/____

TEST PHASE: (Check one) DATE_____/_____/_____

____ MEMBRANE ONLY; TYPE_____

____ MEMBRANE-PAVEMENT; PAVT. TYPE_____ THCK_____ft.

GROUND CHECK RDG._____ohms (avg.) OHMMETER RANGE USED R x_____

GRID SPACING_____ft. CREW_____

•••BRIDGE & GRID LAYOUT AND MEASUREMENTS•••

SCALE: VERT._____in. =_____ft.; HORIZ._____in. =_____ft. NOTE: Use additional sheets (blank) if necessary.

Figure 3: Example of Electrical Resistivity Measurements

WSDOT Test Method T 420

Test Method for Determining the Maturity of Compost (Solvita Test)

1. SCOPE

The Solvita test is used for evaluating compost conditions.

2. REFERENCE DOCUMENTS

AASHTO T-2

3. TERMINOLOGY

3.1 Definitions

3.1.1 Compost shall be stable, mature, decomposed organic solid waste that is the result of the accelerated, aerobic biodegradation and stabilization under controlled conditions. The result is a uniform dark, soil-like appearance.

3.1.2 Maturity of any compost sample may be judged using both color test results from paddle A and C. Paddle A is a styrene paddle with a gel component that measures the ammonia content of the compost. Paddle C is a styrene paddle with a gel component that measures the carbon dioxide emitted by the compost sample.

4. SUMMARY OF TEST METHOD

There are three easy steps involved in using the Solvita test kit to evaluate compost.

4.1 Obtain and prepare the sample.

4.2 Perform the test by placing both Solvita gel-paddles in the jar.

4.2 Determine compost maturity using the color keys provided in the kit.

5. SIGNIFICANT AND USE

This test is used to determine the maturity of compost materials delivered in the field for use. This test measures the amount of ammonia and carbon dioxide in the compost.

6. APPARATUS

6.1 Solvita Kit containing the following:

a testing jar with lid
a carbon-dioxide paddle (marked with “C”) is purple
an ammonia paddle (marked with “A”) is yellow
color determination charts

6.2 Shovel

6.3 Small trowel or spoon

6.4 A clean container large enough to combine the sample (approximately 5 gallons)

6.5 A clean surface for mixing the sample such as a tarp or plywood

7. SAMPLE PREPARATION

7.1 A composite sample (approximately 1 cubic foot) representing the lot to be tested should be sampled in accordance with AASHTO T-2 “Sampling from Stockpiles” or “Sampling from Transport Units”.

7.2 Place the sample on a hard, clean, level surface where there will be neither loss of material nor the accidental addition of foreign material.

7.3 Particles such wood chips which are too large for the jar (over 1 / 2 inch) should be removed or screened from the compost sample.

7.4 Checking for optimal moisture is absolutely necessary for accurate maturity testing. Samples which are either too wet or too dry are not likely to produce accurate results. The moisture level should be judged by the squeeze test before proceeding. Perform the Squeeze test by squeezing a small handful of compost. When squeezed tightly the compost should feel wet without producing any free water. Compost that is too dry is dusty and will not clump with hard squeezing.

7.5 Mix the material thoroughly by turning the entire sample over three times. With the last turning, the entire sample shall be placed into a conical pile.

7.6 Using a small trowel, or other device, remove a portion from the center of the pile.

7.7 Fill the jar to the fill line and obtain proper density by sharply tapping the bottom of the jar on a counter. Fluffy or coarse composts should be compacted by pressing firmly into the jar.

7.8 If compost to be tested in not in an optimal state, then the following should be performed:

1. If the sample is hot, it should be covered and allowed to cool to room temperature before testing.
2. If the sample is too wet, it should be dried until it passes the squeeze test.
3. If the sample is too dry, add clean water until it passes the squeeze test. This sample shall be covered and allowed to stand at room temperature for 24 hours before performing the test.

8. PROCEDURE

8.1 Open each package by tearing along the top strip and carefully remove the paddle by grasping the handle. *Do not touch the special gel surface, and don’t allow compost to touch it.* Once the gelpack is opened, the test should be started within 30-minutes. The gel is not harmful to touch, but should be kept out of the mouth and eyes.

8.2 Insert the paddles into the sample at right angles to each other so that they can be seen through the viewing side. The edges of the paddles can be touching in the middle. Position the two paddles as indicated by the color squares on the jar label. Push the paddle tips into the compost to the bottom of the jar. Be careful not to jostle or tip the jar. Do not use a paddle if the gel is dried out or if the color is not the “Control Color” indicated on the respective color charts.

8.3 Screw the lid on tight, and keep the jar at room temperature 68-77 F (20-25 C) out of direct sunlight for 4 hours $\pm$ 10 minutes.

9. EVALUATING THE RESULTS

9.1 Read the Solvita paddle colors 4 hours after the test is started. To read the colors, observe the paddles through the viewing side of the jar with the lid in place and illuminated from the front. Color rendition is best in moderate-intensity, fluorescent room light. Compare to the color charts provided with the kit, and record the color numbers that most closely match. Since the Solvita colors may continue to change after 4-hours, the proper interpretation for this test is based on a 4-hour $\pm$ 10 minute reading.

10. REPORTS

10.1 Report both the readings for the “A” paddle and the “C” paddle in the Inspector’s Daily Report.

Performance Exam Checklist

Determining the Maturity of Compost (Solvita)T

Participant Name _____ Exam Date _____

Procedure Element	Yes	No
Sample Preparation		
1. Representative sample obtained per AASHTO T-2?	_____	_____
2. Sample placed on clean hard surface?	_____	_____
3. Check for optimal moisture?	_____	_____
4. Sampled mixed thoroughly?	_____	_____
5. Small sample taken from the center of the pile?	_____	_____
6. Sample filled in jar to the proper line and compacted?	_____	_____
Procedure		
1. Open the gel packs with out touching the gel sticks?	_____	_____
2. Is the test started within 30 minutes of opening the gel pack?	_____	_____
3. Are the paddles inserted in the compost at right angles to each other?	_____	_____
4. Are the paddles positioned to be seen through the viewing window?	_____	_____
5. Are the paddles pushed to the bottom of the jar?	_____	_____
6. Is the lid screwed on tight?	_____	_____
7. Is the jar at room temperature 68-77 F?	_____	_____
8. Is the test run for 4 hours + 10 minutes?	_____	_____
9. Are the color charts read?	_____	_____

First attempt: Pass ☐ Fail ☐ Second attempt: Pass ☐ Fail ☐

Signature of Examiner _____

Comments:

WSDOT Test Method No. 606

Method of Test for Compaction Control of Granular Materials

1. SCOPE

   a. This test method consists of three separate tests which present a method for establishing the proper maximum density values to be used for controlling the compaction of granular materials. These methods account for variations of maximum obtainable density of a given material for a given compactive effort, due to fluctuations in gradation.

   b. By splitting the material on the U.S. No. 4 (4.75 mm) sieve and determining the specific gravity, the compacted density, and the loose density of each of the two fractions, a curve of maximum density versus percent passing the U.S. No. 4 (4.75 mm) sieve can be plotted. These curve values will correlate closely with the densities obtained in the field; using modern compaction equipment.

   c. The test methods are applicable either to specifications requiring compacting to a given percentage of maximum density, or to specifications requiring compaction to a given compaction ratio.

   d. Use of these test methods eliminates the danger of applying the wrong “Standard” to compaction control of gravelly soils.

   e. This test method is applicable for granular materials with more than 30 percent retained on the U.S. No. 4 (4.75 mm) sieve.

Test No. 1

(Fine Fraction-l00 Percent Passing U.S. No. 4 (4.75 mm) Sieve)

1.1 SCOPE

   a. This test was developed for the sandy, non-plastic, highly permeable soils which normally occur as the fine fraction of granular base course and surfacing materials.

   b. When the fine fraction is primarily a soil having some plasticity and low permeability, AASHTO T 99 (Standard Proctor Test) may be used. With borderline soils, both tests should be applied and the one yielding the highest density value should be used.

1.2 EQUIPMENT

   a. Vibratory, Spring Load Compactor (Figures l and 2) — Specifications for vibratory spring load compactor can be obtained from the FOSSC Materials Lab.

   b. Mold — Molds of the above dimensions can be fabricated from standard cold drawn-seamless piles or tubes. The small button at the center of the small mold follower is a measuring point. The height of this button should be adjusted so the machine follower does not bear on it during compaction. See Figure 3 for mold dimensions.

   c. Mold Piston — A piston which has a diameter of $5^{7}/_{8}$ in. (150 mm).

   d. Height-Measuring Device — A scale with an accuracy of 0.01 in. (0.25 mm).

   e. Tamping Hammer — As specified in AASHTO T 99, Section 2.21.

   f. Sieve — U.S. No. 4 (4.75 mm) sieve.

g. Oven — Capable of maintaining a temperature of 230° ± 5°F (110 ± 5° C) for drying moisture samples.

h. Balance — A balance having a capacity of100 lbs. (45 kg) and an accuracy of 0.1 lbs. (50 g).

i. Tamping Rod — 5/8 in. (16 mm) spherical end.

1.3 PROCEDURE

a. Oven-dry the total original sample at a temperature not to exceed 140°F (60°C).

b. Obtain tare weight of mold and bottom plate, record weight (mass) to the nearest 0.01 lb. (5 g).

c. Separate the sample, by screening, into two fractions divided on the U.S. No. 4 (4.75 mm) sieve. The fraction passing the sieve is used in this test and the fraction retained will be used in Test No. 2.

d. From the fine fraction (U.S. No. 4 (4.75 mm) minus) split or otherwise obtain a representative sample of approximately 13 lbs. (6 kg). (This mass can be adjusted after the first compaction run to yield a final compacted sample approximately 6 in. (150 mm) high.)

e. Add water to the sample (the sample should be completely and thoroughly mixed) until it is saturated when compacted. Note that the moisture content should be adjusted so that free water will show at the base of the mold between 500 lbs. (227 kg) and 2,000 lbs. (908 kg). (See Section 1.3h.) Most materials will yield the highest density at that moisture content. Some materials may continue to gain density on increasing the moisture above that specified; however, severe washing-out of the fines will occur, which will alter the character of the sample and void the test results.

Note: "Free water" is classified as a drop or two of water.

f. Place the sample in the mold in three layers. Rod each layer 25 times and tamp with 25 blows of the tamping hammer. The blows of the hammer should produce a 12 in. (305 mm) free fall provided severe displacement of the sample does not occur. In such cases, adjust the blow strength to produce maximum compaction. The surface of the top layer should be finished as level as possible.

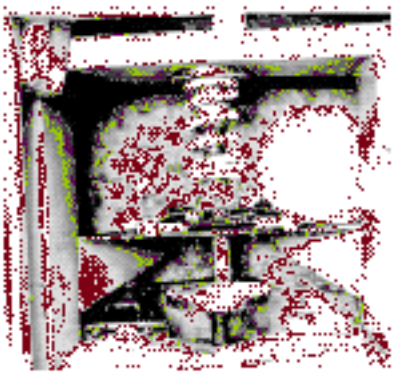

Figure 1

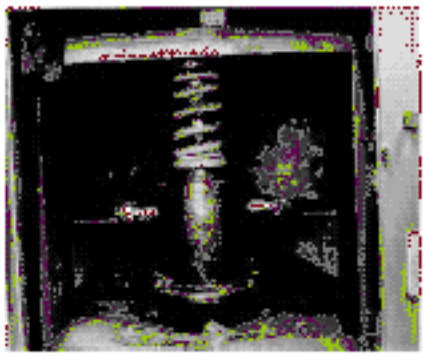

Figure 2

g. Place the piston on top of the sample in the mold, and mount the mold on the jack in the compactor. Elevate mold with the jack until the load-spring retainer seats on top of the piston. Apply initial seating load of about 100 lbs. (45 kg) on the sample.

h. Start the compactor hammers and, at the same time, gradually increase the spring load on the sample to 2,000 lbs. (908 kg) by elevating the jack. The rate of load application is as follows:

Load in lbs (kg)	**Time in Minutes**
100 to 500 lbs. (0 to 227)	1
500 lbs. to 1,000 lbs. (227 to 454)	1/2
1,000 lbs. to 2,000 lbs. (454 to 908)	1/2

i. After reaching 2,000 lbs. (908 kg), stop the hammers, release the jack, and return to zero pressure.

j. Repeat step h. four additional times After the last run, remove the mold from the compactor.

k. Measure and record the height of the compacted sample to the nearest 0.01 in. (.25 mm) and calculate the volume (see Section 1.4)

l. Remove the sample from the mold, weigh it, and record its mass (weight) to the nearest 0.01 lbs. (5 g), and calculate the wet density.

m. Vertically slice through the center of the sample, take a representative sample (at least 1.1 lbs. (500 g)) of the materials from one of the cut faces (using the entire sample is acceptable), weigh immediately, and dry in accordance with AASHTO T 255 to determine the moisture content, and record the results. Calculate and record the dry density.

n. Repeat steps d. through m. at higher or lower moisture contents, on fresh samples if needed, to obtain the maximum density value for the material, three tests are usually sufficient.

1.4 CALCULATIONS

a. The formula for calculating the volume and dry and wet densities are as follows:

$$V = \frac{(H_1 - H_2)(B)}{1728}$$

H_1 = Inside height of the mold, mm.

H_2 = Height from top of the sample to the top of the mold, mm.

B = Inside bottom area of the mold, mm^2

$$\text{Wet Density} = \frac{\text{Wet Mass (Weight)}}{\text{Volume in } m^3 (ft.^3)}$$

$$\text{Dry Density} = \frac{\text{Wet Density}}{1 + \text{Moisture Content *}}$$

Note: See AASHTO T 255-92 “Total Moisture Content of Aggregate by Drying,” for moisture content calculations.

Test No. 2

(Coarse Fraction-100 Percent Retained on the U.S. No. 4 (4.75 mm) Sieve)

2.1 SCOPE

a. This test is used when there is 100 percent retained on the U.S. No. 4 (4.75 mm) sieve. There are two separate procedures based on the maximum size of the aggregate being tested. Procedure 1 is used when the maximum size of the aggregate does not exceed 3/4 in. (19 mm). Procedure 2 is used when the aggregate is greater than 3/4 in. (19 mm), but does not exceed 3 in. (76 mm). If there is any aggregate greater than 3 in. (76 mm), it has to be removed before proceeding with the test.

Procedure 1

(Aggregate Size: No. 4 to 3/4 in. (19 mm)

2.2 EQUIPMENT

a. The equipment for this test is the same as that used in Test No. 1

2.3 PROCEDURE

a. From the coarse fraction obtained in Test No. 1, Section 1.3(C), separate a representative sample of 10 to 11 lbs. (4.5 to 5 kg) and weigh to 0.01 lbs. (5 g).

b. Dampen the sample to 2 1/2% moisture and place it in a 0.1 ft.^{3} (0.0028 m^3) mold, in three lifts. Tamp each lift lightly to consolidate the material to achieve a level surface. Omit rodding. Avoid loss of the material during placement.

c. Place the piston on top of the simple, in the mold, and follow the procedure described in Test No. 1, Sections 1.3g. through 1.3k.

d. Using the original dry weight value, calculate the dry density in kg/m^3. Use the formula for dry density described in Test No. 1, Section 1.4.

Procedure 2

(Aggregate Size: No. 4 to 3 in. (76 mm))

2.4 EQUIPMENT

a. 1/2 ft.^{3} (0.014 m^3) standard aggregate measure.

b. A metal piston having a diameter 1/8 in. (3 mm) less than the inside diameter of the 1/2 ft.^{3} (0.014 m^3) measure.

2.5 PROCEDURE

a. From the coarse fraction in Test No. 1, Section 1.3c., separate a representative sample of 45 lb. (20 kg) and weigh to 0.1 1b. (50 g).

b. Split the sample into five representative and approximately equal parts.

c. Place the sample in the mold in five separate lifts after each lift is placed in the mold, position the piston on the sample, mount the mold in the compactor, and compact as described in Test No. 1, Section 1.3h. Spacers between the load spring and piston must be used to adjust the elevation of the mold to the height of the lift being compacted.

d. After the final lift is compacted, remove the mold from the compactor, determine the height of the compacted sample, and calculate the volume (see Test No. 1, Section 1.4(A)).

e. Calculate the dry density in lbs./ft.^{3} (kg/m^3) (see Test No. 1, Section 1.4(A)).

Test No. 3

Specific Gravity Determination for Maximum Density Test

3.1 EQUIPMENT

a. Volumetric flask calibrated at the test temperature having a capacity of at least 100 ml or a stoppered bottle having a capacity of at least 50 ml.

b. One vacuum pump or aspirator (pressure not to exceed 100 mm mercury).

c. One balance accurate to 0.1 g.

3.2 MATERIAL

a. Fine fraction U.S. No. 4 (4.75 mm) minus 1.1 lbs. (500 g) minimum.

b. Coarse fraction U.S. No. 4 (4.75 mm) plus 2.2 lbs. (1,000 g) minimum.

3.3 PROCEDURE

a. Place dry material, either fine or coarse fraction, in pycnometer, add water. Put pycnometer jar top in place and connect to vacuum apparatus. Apply vacuum for at a minimum of 20 minutes until air is removed from sample. Slight agitation of the jar every 2 to 5 minutes will aid the de-airing process. If the material boils too vigorously, reduce the vacuum. Remove vacuum apparatus, fill pycnometer with water, dry outside of jar carefully and weigh. Water temperature during test should be maintained as close to 68° ± 1°F (20° ± 0.5°C) as possible.

Calculate Specific Gravity as follows:

$$\text{Sp. Gr.} = \frac{a}{a + b - c}$$

Where:

a = Weight of dry material, grams

b = Weight of pycnometer + water, grams

c = Weight of pycnometer + material + water, grams

3.4 REPORTS

a. All test results are recorded on the maximum density work sheet. A copy of the maximum density work sheet is shown in Figure 3.

b. The four separate test values determined above are all the data necessary to determine the coordinates required for construction of a maximum density curve, see Figure 4. The end points of the curve are the densities determined from tests number 1 and 2. The four intermediate points are determined through the aid of an appropriate computer program. The input to the computer consists of those values on the work sheet numbered A through D; the output, a recapitulation of input plus coordinates of the above mentioned four points. To construct the density curve, the points are plotted and a line connecting the points is drawn using a number 50 ships curve. The correctly shaped density curve is obtained by using the number 50 curve, concave side up, curved end to the outside, with a short, connecting curve.

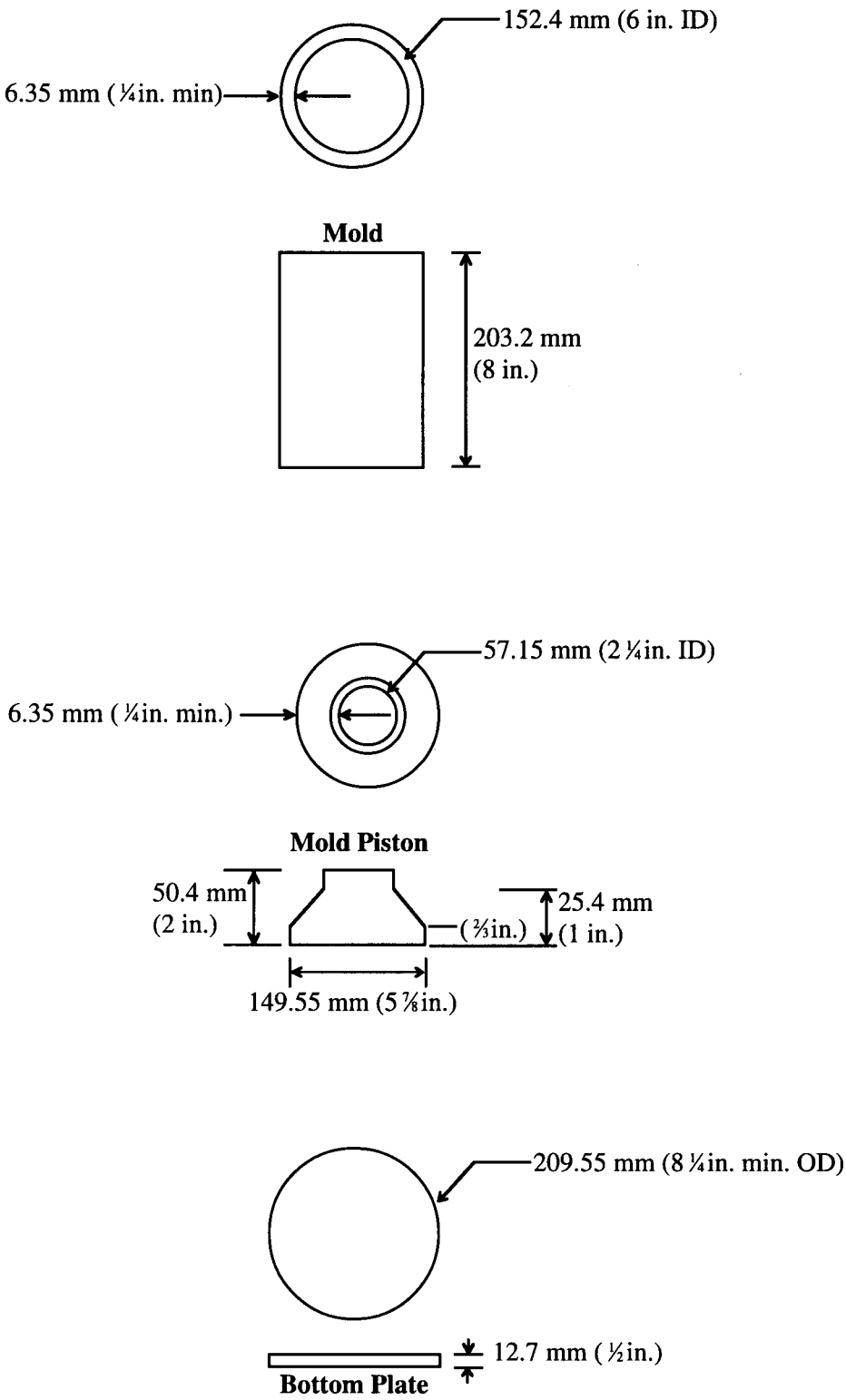

Figure 3: Mold Dimensions (All Dimensions ± 0.051 mm (0.002 in.))

Washington State Department of Transportation

MAX. DENSITY CURVE WORKSHEET

Lab. No. _____

Material Type: _____

Computed by: _____

Date: _____

SPECIFIC GRAVITY - COARSE

A. Wt Sample (g) _____

B. Wt Pycn + H_20 (g) _____

C. Wt Pycn w H_20 + A (g) _____

D. Wt Pycn w H_20 w Sample (g) _____

E. Displacement (ml) _____

SpG Coarse = $\frac{A}{E}$ = _____

SPECIFIC GRAVITY - FINE

K. Wt Sample (g) _____

L. Wt Pycn + H_20 (g) _____

M. Wt Pycn w H_20 + K (g) _____

N. Wt Pycn w H_20 + Sample (g) _____

O. Displacement (ml) _____

SpG Coarse = $\frac{K}{O}$ = _____

DENSITY - COARSE

F. Wt Sample (g) _____

G. Mold Volume (mm^3) _____

H. Height Constant _____

I. Volume Correction _____

J. Corrected Volume:

G - (H x I) _____

Density = $\frac{F}{J}$ _____

DENSITY - FINE

P. Wt Sample (g) _____

Q. Mold Volume (mm^3) _____

R. Height Constant _____

S. Volume Correction _____

T. Corrected Volume:

Q - (R x S) _____

Density = $\frac{P}{T}$ _____

LABOR CODES

T43J_____ T633_____

Figure 4: Maximum Density Worksheet

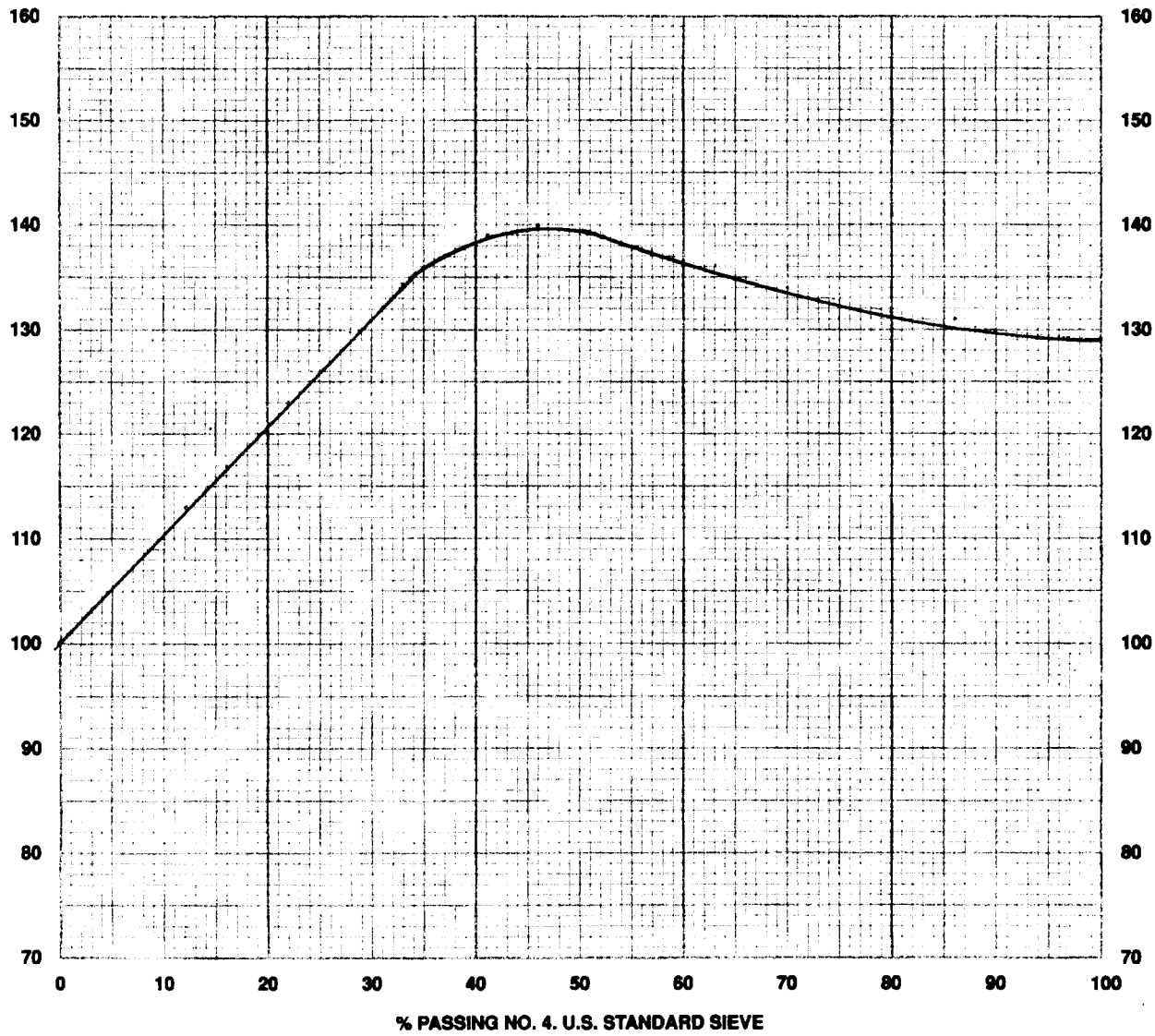

DISTRIBUTION:
Mat'l Files _____
Gen'l Files _____
Dist. Oper. Engr. _____
Dist. Soils Engr. _____
Proj. Engr. _____
Soils Lab. _____

DOT 351-005X
Revised 8/92—f

The approximate optimum moisture content is.....7%.....
The optimum moisture content of the No. 4 minus fraction, as determined by a standard proctor test, is.....
Specific Gravity Coarse ....2.71.
Specific Gravity Fine 2.65

Materials Engineer

By .....

Date .....

Figure 5-a: Maximum Density Curve Graph

NW REGIONAL LAB MAXIMUM DENSITY CURVE

Contract Number	4776	Transmittal Number:	135756	Lab Number:	D1-0326
SR #: 18	Section:	SE 312th to SE 304th		Pit Number:	A-464
Field Description:		CSBC		% Passing #4:	25.0%
Lab Description:		Silty,Sandy,Fractured Rock		Date Received:	5/20/96

MAXIMUM DENSITY CURVE

% PASS #4	DRY WT LBS/CF	% PASS #4	DRY WT LBS/CF	% PASS #4	DRY WT LBS/CF	% PASS #4	DRY WT LBS/CF	% PASS #4	DRY WT LBS/CF
0	103.2	1	104.0	2	104.8	3	105.6	4	106.3
5	107.1	6	107.9	7	108.8	8	109.6	9	110.4
10	111.3	11	112.1	12	113.0	13	113.9	14	114.8
15	115.8	16	116.7	17	117.7	18	118.7	19	119.7
20	120.8	21	121.9	22	123.0	23	124.2	24	125.3
25	126.5	26	127.6	27	128.7	28	129.8	29	130.8
30	131.8	31	132.8	32	133.6	33	134.5	34	135.2
35	136.0	36	136.6	37	137.2	38	137.8	39	138.3
40	138.7	41	139.0	42	139.4	43	139.6	44	139.8
45	139.9	46	140.0	47	140.0	48	139.9	49	139.8
50	139.7	51	139.5	52	139.3	53	139.1	54	138.8
55	138.5	56	138.2	57	137.9	58	137.6	59	137.3
60	136.9	61	136.6	62	136.3	63	136.0	64	135.7
65	135.4	66	135.1	67	134.8	68	134.5	69	134.3
70	134.0	71	133.8	72	133.6	73	133.3	74	133.1
75	132.9	76	132.7	77	132.5	78	132.3	79	132.1
80	132.0	81	131.8	82	131.6	83	131.5	84	131.3
85	131.2	86	131.0	87	130.9	88	130.7	89	130.6
90	130.4	91	130.3	92	130.2	93	130.1	94	129.9
95	129.8	96	129.7	97	129.6	98	129.4	99	129.3
100	129.2								

Figure 5-b: Maximum Density Curve Chart

Performance Exam Checklist

Method of Test for Compaction Control of Granular Materials

Participant Name _____ Exam Date _____

Procedure Element	**Yes**	**No**
Fine Fraction — 100% Passing the US No. 4 (4.75 mm) Sieve		
Sample Preparation		
1. Has the sample been oven-dried?	_____	_____
2. Has the sample been separated on the US No. 4 (4.75 mm) sieve?	_____	_____
3. Is the sample weight approximately 13 lbs?	_____	_____
Procedure		
1. Is sample staurated when compacted?	_____	_____
2. Has sample been placed in three layers, rodded 25 and tamped 25 times, each layer?	_____	_____
3. Is the hammer blow approximately a 12 inch free fall to prevent severe displacement of the sample?	_____	_____
4. Has piston been placed on top of the sample?	_____	_____
5. Has the mold been mounted on the jack in the compactor?	_____	_____
6. Has the mold been elevated until the load-spring retainer sits on top of the piston?	_____	_____
7. Has the initial load been set at 100 pounds?	_____	_____
8. Is the loading rate applied as specified in the test procedure?	_____	_____
9. Has the hammer been stopped, jack released, and pressure returned to zero when 2,000 pounds pressure was reached?	_____	_____
10. Steps 7 through 10 repeated four additional times?	_____	_____
11. Is free water present at the base of the mold between 500 and 2,000 pounds pressure?	_____	_____

Procedure Element	Yes	No
12. Has the height of the sample been determined?	_____	_____
13. The mold removed fro the compactor?	_____	_____
14. Has sample been weighed?	_____	_____
15. Has sample been removed from mold and a representative portion immediately weighted and the moisture percentage determined?	_____	_____
16. Moisture content, dry desnity determined and entered on the testing sheet?	_____	_____
17. Has maximum density determined by testing fresh samples, as necessary, at different moiture contents and entered on the testing sheets?	_____	_____

Comments: First attempt: Pass ☐ Fail ☐ Second attempt: Pass ☐ Fail ☐

_____

_____

_____

_____

_____

_____

_____

_____

_____

_____

Signature of Examiner _____

Test 2
Procedure 1
(Aggregate Size: No. 4 to 3/4 in. (19 mm)

Procedure Element	**Yes**	**No**
Sample Preparation		
1. Has the sample been oven-dried?	_____	_____
2. Has the sample been separated on the US No. 4 (4.75 mm) sieve?	_____	_____
3. Does all of the material pass the 3/4 in. (19 mm) sieve?	_____	_____
4. Is the sample weight approximately 10 to 11 lbs?	_____	_____
Procedure		
1. Weight and record sample weight?	_____	_____
2. Has the sample been dampened to 2 1/2 percent and placed in a 0.1ft^3 mold and placed in three lifts by tamping with 25 blows?	_____	_____
3. Piston placed on top of sample and mold mounted on jack in compactor?	_____	_____
4. Mold elevated until the load-spring retainer sits on top of the piston?	_____	_____
5. Initial load of 100 lbs set prior to starting machine?	_____	_____
6. Is the load rate applied as specified in the test procedure?	_____	_____
7. Hammers stopped, jack released, and pressure returned to 100 pounds when 2000 pound load has been reached?	_____	_____
8. Steps 5 and 6 repeated four additional times?	_____	_____
9. The mold removed from the compactor and the height measured?	_____	_____
10. Dry density calculated and entered on the testing sheets?	_____	_____

Comments: First attempt: Pass ☐ Fail ☐ Second attempt: Pass ☐ Fail ☐

_____

_____

_____

_____

_____

_____

_____

_____

Signature of Examiner _____

Test 2
Procedure 2
(Aggregate Size: No. 4 to 3 in. (76 mm))

Procedure Element	**Yes**	**No**
Sample Preparation		
1. Has the sample been oven-dried?	_____	_____
2. Has the sample been separated on the US No. 4 (4.75 mm) sieve?	_____	_____
3. Is the sample weight approximately 45 lbs?	_____	_____
4. Does the sample contain $^3/_4$ + material?	_____	_____
5. Has material greater than 3 in. (76 mm) been removed?	_____	_____
6. Sample separated into 5 approximately equal parts?	_____	_____
Procedure		
1. Sample place in the mold in five separate lifts?	_____	_____
2. After each lift, mold placed in compactor and compacted according to test procedure?	_____	_____
3. After compacting final lift, sample removed from compactor and volume determined?	_____	_____
4. Dry density determined calculated and entered onto testing sheet?	_____	_____

Comments: First attempt: Pass ☐ Fail ☐ Second attempt: Pass ☐ Fail ☐

_____

_____

_____

_____

_____

_____

_____

_____

_____

_____

Signature of Examiner _____

Procedure Element	**Yes**	**No**
Specific Gravity Determination for Maximum Density Test		
Sample Preparation		
1. Has the sample been oven-dried?	_____	_____
2. Has the sample been separated on the US No. 4 (4.75 mm) sieve?	_____	_____
3. Weight of fine fraction approximately 500g?	_____	_____
4. Weight of coarse fraction approximately 1000g?	_____	_____
Procedure		
1. Mass of each fraction determined?	_____	_____
2. Material placed in pycnometer and water at 68°F added?	_____	_____
3. Vacuum applied for at least 20 minutes?	_____	_____
4. Container and contents agitated manually by shaking at intervals of about 2 to 5 minutes?	_____	_____
5. Pycnometer filled with water at 68°F?	_____	_____
6. Pycnometer dried, weighted, and recorded on testing sheet?	_____	_____
7. Specific Gravity calculated and entered onto testing sheet?	_____	_____

Comments: First attempt: Pass ☐ Fail ☐ Second attempt: Pass ☐ Fail ☐

_____

_____

_____

_____

_____

_____

_____

_____

_____

_____

Signature of Examiner _____

WSDOT Standard Operating Procedure No. 615

In-Place Density of Embankment and Base using the Nuclear Moisture-Density Gauge

Moisture Determination

Moisture Determination may be accomplished by AASHTO T 217 or AASHTO T 255. When using T 255 for moisture determination, the sample size shall be approximately 9 lbs.

Gradation Analysis

This procedure is used as an expedient method to determine the distribution of particles retained on the No. 4 (4.75 mm) sieve. The sample used will be obtained from the density test location. Sample used for moisture content may be used for No. 4 (4.75 mm) sieve analysis.

(a) Determine the initial mass of the sample to nearest 1 g.

(b) Dry sample. When moisture percent is determine by either AASHTO T-217 or if AASHTO T 255 is used, the sample need only be dried to SSD conditions (i.e., dried until no visible surface moisture present and record the mass.

(c) Allow sample to cool sufficiently prior to sieving. Sieving hot samples may distort or damage sieves

(d) Shake by hand over the No. 4 (4.75 mm) sieve for a sufficient period and in such manner that after completion, not more than 0.5 percent by weight of the total sample passes the sieve. Limit the quantity of material on the sieve so that all particles have opportunity to reach the sieve openings a number of times during the sieving operation. For the No. 4 (4.75 mm) sieve, the mass retained on the sieve at the completion of the sieving operation shall not exceed 4.5 g/sq in (7kg/m^2) of sieving surface.

(e) Remove and weigh the material on the No. 4 (4.75 mm) sieve.

(f) Divide the mass on the No. 4 (4.75 mm) sieves by the initial dry mass, determine the amount of material passing the No. 4 (4.75 mm) sieve.

Note: Calculate the percentage passing to the nearest percent.

Oversize Correction for AASHTO T 99

(a) This Test Method is applicable to nongranular, silty materials with less than 30 percent retained on the No. 4 (4.75 mm) sieve. FOP for AASHTO T 272may be run in the field, if the soil sample exhibits different characteristics than that generally found from the original source.

(b) To correct for oversize, use the procedure described in FOP for AASHTO T224.

(c) When 0% is retained on the No. 4 (4.75 mm) sieve, no correction is necessary, use the Moisture Density Relationship Report.

1) Percent Compaction is then calculated by the formula:

$$\text{Density kg/m}^3\ (\%\ \text{MAX}) = \frac{\text{Dry Density kg/m}^3\ (\text{lbs./ft.}^3)\ (100)}{\text{Corrected Maximum Density kg/m}^3\ (\text{lbs./ft.}^3)(\text{MAX Corr.})}$$

Determination of Maximum Density for WSDOT Test Method No. 606

(a) This test method is applicable to granular, free-draining materials and to materials with 30 percent or more retained on the 4.75 mm (No. 4) sieve. Test Method 606 requires specialized equipment and is run only by the Region or FOSSC Materials Lababoratory.

(b) To determine corrected Maximum Density, refer to computer generated chart for percent passing the 4.75 mm (U.S. No. 4) sieve. This value should be entered on DOT Form 350-074 on line "Maximum Density" from appropriate curve kg/m^3(lbs./ft.^{3}).

(c) Percent of compaction is then calculated by the formula:

$$\text{Density kg/m}^3\ (\%\ \text{MAX}) = \frac{\text{Dry Density kg/m}^3\ (\text{lbs./ft.}^3)\ (100)}{\text{Maximum Density kg/m}^3\ (\text{lbs./ft.}^3)(\text{MAX Corr.})}$$

WSDOT Test Method No. 712

Standard Method of Reducing Bituminous Paving Mixtures

Significance

Samples of bituminous paving mixes taken in accordance with FOP AASHTO T 168 are composites and are large to increase the likelihood that they are representative of the product being tested. Materials sampled in the field need to be reduced to appropriate sizes for testing. It is extremely important that the procedure used to reduce the field sample not modify the material properties.

1. SCOPE

   This method cover the procedure for reducing samples of Hot Mixed Asphalt (HMA). The samples are to be acquired in accordance with FOP AASHTO T 168 and the increments placed in a suitable container(s). The normal field sample should be between 50 lbs. (20 kg) to 100 lbs. (45 kg) and should as a minimum be approximately four times that required for testing. The sample is to be representative of the average of the HMA being produced.

2. APPARATUS

   - Flat-bottom scoop,
   - Broom or brush,
   - Non-stick splitting surface such as metal, paper, canvas blanket or heat-resistant plastic,
   - Large spatulas, trowels, metal straight edge or 12 in. dry wall taping knife, sheet metal quartering splitter,
   - Oven — An oven of appropriate size, capable of maintaining a uniform temperature within the allowable tolerance for the grade of asphalt.
   - Miscellaneous equipment including trowel(s), spatula(s), hot plate, non-asbestos heat-resistant gloves or mittens, pans, buckets, cans.

3. SAMPLE PREPARATION

   The sample must be warm enough to separate. If not, warm in an oven until it is sufficiently soft to mix and separate easily.

4. PROCEDURE

   Initial Reduction of Field Sample

   A. Place the sample on a hard, clean, non-stick, level surface where there will be neither loss of material nor the accidental addition of foreign material. The surface may be covered with a canvas blanket, heavy paper or other suitable material. Remove the sample from the agency approved containers by dumping into a conical pile.

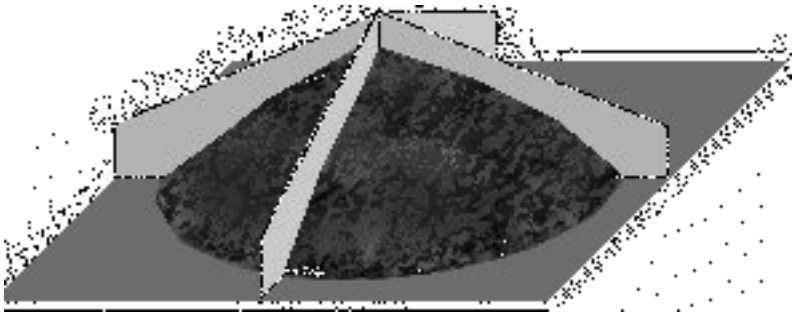

Figure 1

B. Divide the into four approximately equal quarters with a spatula, trowel, flat metal plate, or sheet metal quartering splitter.

C. With the quartering devise in place remove all the material from each quarter. If needed for additional testing the material should be placed in agency approved containers for storage or shipment.

Note 1: When testing lean mixes with aggregate larger than 3/4 in. (19 mm), sampling as described in Method B, with no remixing, is recommended at this point to obtain samples for each acceptance test.

D. Pay particular attention that excessive amounts of materials is not left on the splitting surface or splitting equipment.

F. When the further reduction of the HMA is to be done, proceed according to step 2 of methods A, B, or C.

Note 2: Identify the opposite quarter as the "Challenge Sample."

Reducing to T est Size — Method A

1. On a hard, clean, non-stick, level surface where there will be neither loss of material nor the accidental addition of foreign material. Remove the sample from the agency approved containers by dumping into a conical pile. The surface shall be covered with either a canvas blanket, heavy paper or other suitable material.

2. With the material on the canvas or paper. Mix the sample thoroughly by turning the entire sample over four times. Alternately lift each corner of the canvas or paper and pull it over the sample diagonally toward the opposite corner causing the material to be rolled. With the last turning, lift both opposite corners to form a conical pile.

3. Grasp the canvas or paper, roll the material into a loaf and flatten the top.

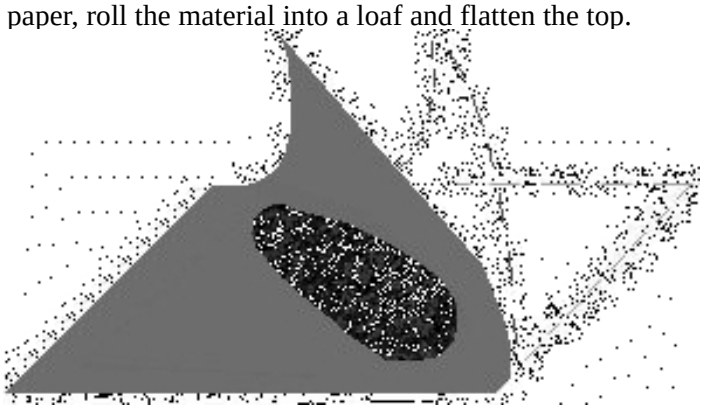

Figure 3

4. Pull the canvas or paper so approximately 1/4 of the length of the loaf is off the edge of the counter. Allow this material to drop into a container to be saved. As an alternate using a straight edge slice off approximately 1/4 of the length of the loaf and place in a container to be saved.

Figure 4

5. Pull additional material (loaf) off the edge of the counter and drop the appropriate size sample into a sample pan or container. As an alternate using a straight edge slice off appropriate size sample from the length of the loaf and place in a sample pan or container.

6. Repeat step 5 until the proper size sample has be acquired. Step 5 is to be repeated until all the samples for testing have been obtained.

   Note 3: When reducing the sample to test size it is advisable to take several small increments determining the mass each time until the proper minimum size is achieved. Unless the sample size is grossly in excess of the minimum or exceeds the maximum test size use the sample as reduced for the test.

Reducing to Test Size — Method B

1. On a hard, clean, non-stick, level surface where there will be neither loss of material nor the accidental addition of foreign material. Remove the sample from the agency approved containers by dumping into a conical pile. The surface shall be covered with either a canvas blanket, heavy paper or other suitable material. (See Note 1.)

2. With the material on the canvas or paper. Mix the sample thoroughly by turning the entire sample over four times. Alternately lift each corner of the canvas or paper and pull it over the sample diagonally toward the opposite corner causing the material to be rolled. With the last turning, lift both opposite corners to form a conical pile.

3. Quarter the conical pile using a quartering device or straightedge.

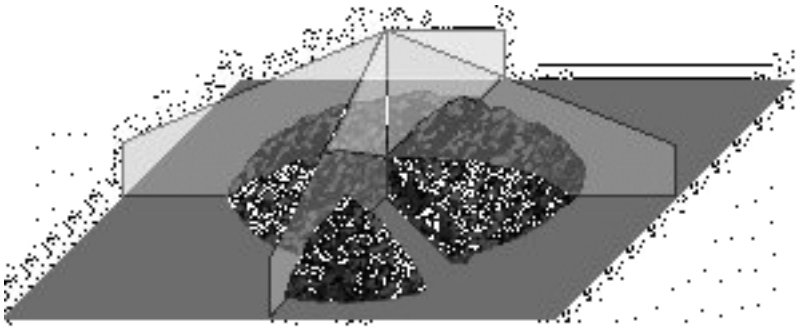

Figure 5

4. With the quartering device in place using a suitable straight edge slice through the quarter of the HMA from the apex of the quarter to the outer edge. Pull or drag the material from the quarter holding one edge of the straight edge in contact with the quartering device. Two straight edges may be used in lieu of the quartering device.

5. Slide or scoop the material into a sample pan. Repeat step 4 removing a similar amount of material from the opposite quarter. Step 4 is to be repeated until all the samples for testing have been obtained.

   Note 4: When reducing the sample to test size it is advisable to take several small increments determining the mass each time until the proper minimum size is achieved. Unless the sample size is grossly in excess of the minimum or exceeds the maximum test size use the sample as reduced for the test.

Reducing to Test Size — Method C

1. On a hard, clean, non-stick, level surface where there will be neither loss of material nor the accidental addition of foreign material. Remove the sample from the agency approved containers by dumping into a conical pile. The surface shall be covered with either a canvas blanket, heavy paper or other suitable material.

2. With the material on the canvas or paper. Mix the sample thoroughly by turning the entire sample over four times. Alternately lift each corner of the canvas or paper and pull it over the sample diagonally toward the opposite corner causing the material to be rolled. With the last turning, lift both opposite corners to form a conical pile.

3. Quarter the conical pile using a quartering device or straightedge.

4. Remove the opposite quarters saving the material for future use.

5. Repeat step 2 through 4 until the proper size sample has be achieved.

6. When additional test specimens are required, dump the removed material into a conical pile as in step 1 and repeat steps 2 through 5. This process may be repeated until sample have been reduced to testing size for all tests.

5. SAMPLE IDENTIFICATION

   (1) Each sample submitted for testing shall be accompanied by a transmittal letter completed in detail. Include the contract number, acceptance and mix design verification numbers, mix ID.

   (2) Samples shall be submitted in standard sample boxes, secured to prevent contamination and spillage.

   (3) Sample boxes shall have the following information inscribed with indelible-type marker: Contract number, acceptance and mix design verification numbers, mix ID.

   (4) The exact disposition of each quarter of the original field sample shall be determined by the agency.

Performance Exam Checklist

Reducing Samples of Hot Mix Asphalt to Testing Size FOP for WSDOT T 712

Participant Name _____ Exam Date _____

Procedure Element	**Yes**	**No**
1. Sample warmed if not sufficiently soft?	_____	_____
2. Sample placed on paper on clean, hard, and level surface?	_____	_____
Method A		
3. Sample mixed thoroughly?	_____	_____
4. Rolled into loaf and then flattened?	_____	_____
5. At least _ of loaf removed by slicing off or dropping off edge of counter?	_____	_____
6. Proper sample size quantity of material sliced off or dropped off edge of counter onto sample container?	_____	_____
Method B		
7. Sample thoroughly mixed and conical pile formed?	_____	_____
8. Divided into 4 equal portions with quartering device or straightedge?	_____	_____
9. With two straight edges or a splitting device and one straight edge. Was a sample sliced from apex to outer edge of the quarter?	_____	_____
10. Cleared spaces scraped clean?	_____	_____
11. Process continued until proper test size is obtained?	_____	_____

Procedure Element	**Yes**	**No**
Method C		
12. Sample thoroughly mixed and conical pile formed?	_____	_____
13. Divided into 4 equal portions with quartering device or straightedge?	_____	_____
14. Two diagonally opposite quarters removed and saved?	_____	_____
15. Cleared spaces scraped clean?	_____	_____
16. Process repeated until proper test size is obtained?	_____	_____
17. Were opposite quarters and combined to make sample?	_____	_____

Comments: First attempt: Pass ☐ Fail ☐ Second attempt: Pass ☐ Fail ☐

_____

_____

_____

_____

_____

_____

_____

_____

_____

_____

Signature of Examiner _____

WSDOT Test Method No. 716

Method of Random Sampling for Locations of Testing and Sampling Sites

1. SCOPE

   a. This method outlines the procedure for selecting sampling and testing sites in accordance with accepted random sampling techniques. It is intended that all testing and sampling locations be selected in an unbiased manner based entirely on chance.

   b. Testing and sampling locations and procedures are as important as testing. For test results or measurements to be meaningful, it is necessary that the sampling locations be selected at random, typically by use of a table of random numbers. Other techniques yielding a system of randomly selected locations are also acceptable.

2. APPLICATIONS TO ASPHALT PAVING DENSITY

   a. This method, although general in nature, is primarily used for, and the examples are based on, locations of tests for asphalt concrete density.

   b. A table of random numbers, adapted for specific use in locating asphalt pavement density test sites, is included for this purpose. In using other procedures care should be taken so that lateral locations are at least 1.5 LF (0.45 m) from the edge of a paving pass. Locations within 25 LF (8 m) of an end joint should also be avoided. Whenever a test location is determined to fall within such an area (i.e., bridge end, track crossing, or night joint) the test location should be moved ahead or back on stationing, as appropriate, by 25 LF (8 m).

   c. To address concerns with equal representation and avoidance of concentrated sampling within a LOT. A procedure for stratified random sampling is provided.

   d. A simplified selection process is provided based on standard LOT lengths for typically encountered paving sections.

3. PROCEDURE

   a. Detailed computation based on sampling from random selection of the entire lot.

      (1) Determine the LOT size and number of tests per LOT. The Standard specifications set the size of density test lot for Asphalt Concrete Pavement will be no greater than a single day's production of approximately 400 tons (400 tonnes), whichever is less, and require five tests per LOT.

      (2) Convert this LOT size to an area segment of the roadway based on the roadway section and depth being constructed for the course being tested.

      LOT length may also be determined based on Nominal Designated LOT sizes. To utilize this concept, compacted mix volumes equivalent to the designated mix quantity per LOT have been determined using the nominal compacted unit weight of asphalt concrete pavement. These volumes are then converted into Density LOT lengths using the typical lane width and specified compacted depth. The included tables present the values for LOT Lengths based on metric and on customary units.

Table 1: Random Numbers for Test Locations

Y values are selected so that lateral locations are no closer than 0.45m (1.5 foot) from the edge of a paving strip

SEQUENCE	X	Y	SEQUENCE	X	Y	SEQUENCE	X	Y	SEQUENCE	X	Y	SEQUENCE	X	Y
1	0.290	0.33	21	0.712	0.17	41	0.172	0.87	61	0.768	0.32	81	0.477	0.85
2	0.119	0.43	22	0.193	0.17	42	0.430	0.87	62	0.893	0.37	82	0.267	0.44
3	0.694	0.32	23	0.976	0.69	43	0.704	0.19	63	0.504	0.66	83	0.933	0.28
4	0.722	0.47	24	0.997	0.63	44	0.009	0.18	64	0.043	0.31	84	0.974	0.87
5	0.784	0.39	25	0.930	0.44	45	0.552	0.17	65	0.284	0.39	85	0.600	0.46
6	0.953	0.15	26	0.657	0.69	46	0.626	0.29	66	0.196	0.15	86	0.591	0.19
7	0.576	0.14	27	0.761	0.27	47	0.144	0.62	67	0.742	0.66	87	0.165	0.77
8	0.069	0.74	28	0.389	0.69	48	0.246	0.13	68	0.941	0.43	88	0.668	0.41
9	0.691	0.86	29	0.751	0.20	49	0.055	0.40	69	0.531	0.31	89	0.327	0.29
10	0.973	0.44	30	0.191	0.77	50	0.678	0.66	70	0.478	0.56	90	0.473	0.51
11	0.328	0.50	31	0.006	0.50	51	0.762	0.65	71	0.228	0.37	91	0.598	0.58
12	0.468	0.78	32	0.456	0.23	52	0.285	0.28	72	0.008	0.48	92	0.373	0.69
13	0.183	0.44	33	0.367	0.85	53	0.347	0.87	73	0.002	0.17	93	0.244	0.24
14	0.669	0.36	34	0.025	0.73	54	0.962	0.75	74	0.330	0.42	94	0.831	0.14
15	0.971	0.71	35	0.299	0.33	55	0.203	0.60	75	0.089	0.20	95	0.178	0.45
16	0.336	0.37	36	0.194	0.25	56	0.803	0.35	76	0.434	0.43	96	0.821	0.46
17	0.314	0.78	37	0.936	0.37	57	0.672	0.17	77	0.832	0.71	97	0.124	0.62
18	0.508	0.44	38	0.231	0.71	58	0.306	0.20	78	0.044	0.73	98	0.580	0.57
19	0.347	0.20	39	0.050	0.74	59	0.223	0.83	79	0.235	0.28	99	0.037	0.24
20	0.877	0.85	40	0.584	0.43	60	0.166	0.58	80	0.271	0.62	100	0.700	0.59

T 716

T 716

(3) Determine the locations of the test (or sampling) sites by using values from the random number table (Table 1) to determine the coordinate location on the roadway. In the table, use the "X" values as decimal fractions of the total length of the lot; use the "Y" values as fractions of the width, customarily measured from the right edge of the pavement. The values in the table have been set so that no measurement are taken in within 1.5 LF (0.45 m) of the edge of the pavement.

In order to determine which "X" and "Y" values should be used, enter the table on a line chosen by chance. Recommended procedures is selection of a line based on the last two digits from the most recent standard count on the Nuclear density gage. Subsequent "X" and "Y" values are then taken from the lines which follow. Based on the specified sampling frequency, 20 lots can be accommodated by one cycle through the table. Start each shift with a set of values determined by chance in order to obtain random selection.

b. Stratified Random Sampling

(1) Following determination of the LOT length in Procedure A, above, determine the length increment for individual sublots by dividing by the number of such desired sublots. In the case of Asphalt Concrete Pavement this would be five sublots

(2) Determine random location factors "X" and "Y" values by random entry to the table as described in procedure a.

(3) From the known beginning station determine the location of test No. 1 in sublot No. 1 by multiplying the sublot increment length by the selected "X" factor from the Random Number table. This distance is used to add or subtract from the beginning station depending on the direction of progress. Test locations within each of the subsequent sublots are determined by adding (or subtracting) the unit lengths of the preceding sublot increments and then determining the fractional location within the sublot interval. A computation and test record form (DOT Form 350-092, see Figure 1) has been provided to eliminate the use of separate test location and density record forms.

(4) For irregular lengths at the end of a paving strip (or "pull") determine the length, divide into 5 equal increments and define a test location within each.

Table 2: Asphalt Concrete Density Test Lot Sizes Metric Units
400 tonne lot at 2 439 kg/m3 = 164 m3

Lane Width	Compacted Depth	Computed Lot Length	Recommended Lot Length
	40 mm	1139	1140
3.6 meters	45 mm	1012	1010
	60 mm	759	760
	75 mm	607	610
	40 mm	1242	1240
3.3 meters	45 mm	1104	1100
	60 mm	828	830
	75 mm	663	660

Washington State Department of Transportation

Asphalt Concrete Pavement Compaction Report

Date	Region	Project Engineer	SR Number	Section	Contract Number

Class	Wearing / Leveling	Air Temperatures	Gauge Serial Number	Rice Density	Correlation Factor	Plan Depth (D)
☐ A ☐ C ☐ E ☐ G ☐ B ☐ D ☐ F ☐ Other _____	☐ Wearing ☐ Base ☐ Leveling	Start End				

Beginning Station	Lot Length (A)	Sublot Length [(A) x 0.2] = (L)	Width (W)	Station Station To	Lane	Lot # / Tons	ACP Test Temp.
					☐ Lt. ☐ EB ☐ NB ☐ Other ☐ Rt. ☐ WB ☐ SB _____		

Test Number	(X) Value Table (716)	Random Length (X) x (L)	+ Sublot (L) Increment	+/- Beg. Sta. = Test Sta.	(Y) Value Table (716)	Offset (Y) x (W)	Measured Depth	Core Density	Gauge Readings	Average Reading	Corrected Gauge	Percent of Rice
1			Zero									
2			(L)									
3			(L) x 2									
4			(L) x 3									
5			(L) x 4									

Beginning Station	Lot Length (A)	Sublot Length [(A) x 0.2] = (L)	Width (W)	Station Station To	Lane	Lot # / Tons	ACP Test Temp.
					☐ Lt. ☐ EB ☐ NB ☐ Other ☐ Rt. ☐ WB ☐ SB _____		

Test Number	(X) Value Table (716)	Random Length (X) x (L)	+ Sublot (L) Increment	+/- Beg. Sta. = Test Sta.	(Y) Value Table (716)	Offset (Y) x (W)	Measured Depth	Core Density	Gauge Readings	Average Reading	Corrected Gauge	Percent of Rice
1			Zero									
2			(L)									
3			(L) x 2									
4			(L) x 3									
5			(L) x 4									

Remarks

Rollers			
Passes			

Roller Codes:
SDV - Single Drum Vibrator
DDV - Double Drum Vibrator
P - Pneumatic
TS - Tandem Steel

Gauge Operator	Date	Street Inspector	Date	Contractor	Date

DOT Form 350-092 EF
Revised 6/96

Distribution: Original - Project Engineer
Copy - Cnontractor

Figure 1

English Units
400 Ton lot at 152 lbs./ft.^{3} = 5263 ft.^{3}

Lane Width	Compacted Depth	Computed Lot Length	Recommended Lot Length
12 feet	0.12″	3655	3700
	0.15	2924	2900
	0.20	2193	2200
	0.25	1754	1800
11 feet	0.12	3987	4000
	0.15	3189	3200
	0.20	2392	2400
	0.25	1913	1900

Sample Computation (English Units)

Using nominal compacted density of 2.05 tons/cy, a compacted depth of 0.15 ft., and a paving width of 12 ft.:

Lot Length:

400 tons (normal density lot)

Density Factor

$$\frac{(\text{length} \times \text{width} \times \text{depth})}{27} \times 2.05 \text{ Tons/cy} = \text{Tons/Sta.}$$

$$\frac{100' \times 12' \times 0.15}{27} \times 2.05 = 13.7 \text{ Tons/Sta.}$$

$$\frac{400 \text{ Tons}}{13.7 \text{ Tons/Sta.}} = 29.20 \text{ Sta. } \underline{\textbf{or 2900 ft.}}$$

Approximate LOT lengths for other typical paving widths at 0.15 LF depth are:

8 LF	4,400 LF
10 LF	3,500 LF
11 LF	3,200 LF
12 LF	2,900 LF
24 LF	1,500 LF

These typical figures may be revised based on the actual densities achieved or the yield results from the paving involved.

Test Location Within the LOT

For the lot defined above: (12 ft. wide, 0.15 ft. deep, starting at station 168 + 75 with paving progressing ahead on station), Lot length was previously determined as 2,900 LF. Using the last two digits of the standard count, as in the example, 2951, assume “X” and “Y” values from line (51) in the table: X = 0.762, Y = 0.65.

Beginning station: 168 + 75

Sublot length increment: $580 \times 0.762 = 442$

Width offset: $12 \times 0.65 = 7.8$ ft. (from right edge)

Location is: station: 168+75 + 442 = 173 + 17, 7.8 ft. from right edge

Sample Computations (Metric Units)

Using nominal compacted density of 2 439 kg/m^3, compacted depth of 40 mm and paving width of 3.6 m:

Lot Length:

400 tonnes equate to 400 000 kg

Cross-section pavement area: 3.6 m wide, 0.040 m (40 mm) deep = 0.144 m^2

Unit weight per meter length = 0.144 m^2 $\times$ 2439 kg/m^3 = 351.2 kg/m

Length = 400 000 kg/351.2 kg/m = 1138.9 m round to 1140 m

Sublot length = 1140 m $\times$ 0.2 = 228 m

These typical figures may be revised based on the actual densities achieved or the yield results from the paving involved.

Test Location Within the LOT

For the lot defined above (3.6 m wide, 1140 m long) starting at station 10 000.00 m

Using the last two digits of the standard count. Determine the “X” and “Y” values from line (51) in the table: X = 0.762, Y = 0.65 (these are illustrative examples only. Table format and generation have been randomized so that each replication of the table will vary).

Beginning station: 10 000.00

Sublot length increment: $228 \times 0.762 = 173.7$ m

Width offset: $3.6 \times 0.65 = 2.3$ m (from right edge)

Location is station: 10 000 + 173.7 = 10 173.7, 2.2 m from right edge

WSDOT Test Method No. 724

Method of Preparation of Aggregate for ACP Mix Designs

1. SCOPE

   This method of test is intended for the processing and preparation of aggregate samples for use in mix designs and calibrations for asphalt concrete, asphalt treated base, or open graded products.

2. APPARATUS

   a. Sieves — shall conform to the specifications of sieves for testing purposes.

   b. Mechanical sieve shaker — of sufficient size to separate the material to the specification sieves.

   c. Oven(s) — of appropriate size, capable of maintaining a uniform temperature of 325 ± 25°F (163 ± 14°C).

   d. Container — pans or containers of suitable size to dry and store the aggregate.

   e. Balance — capacity of at least 8 kg sensitive to 0.1 g and meeting the requirements of AASHTO M231.

   f. Aggregate washer (optional).

3. PROCEDURE

   a. Representative sample(s) of the production aggregates shall be obtained.

   b. Dry the aggregate in an oven to a constant mass.

      Note: When developing an Ignition Furnace Calibration Factor, samples from separate stockpiles can be combined in the same percentages as the job mix formula prior to further processing. The combined sample should be at least four times the amount required for a single test (i.e., IFCF determination).

   c. Sieve the aggregate over all the specification sieves designated for class of mix being tested. Place the material retained on each sieve in separate containers.

   d. Wash the separated aggregate samples, except the portion passing the #200 (0.075 mm) sieve, in accordance with WAQTC FOP for AASHTO T 27/11.

   e. Dry the washed, aggregate samples to constant mass.

   f. Recombine the aggregate samples to match the grading of the job mix formula. The sample size as determined by the specific test procedure performed.

Performance Exam Checklist

Method of Preparation of Aggregate for ACP Mix Designs WSDOT T 724

Participant Name _____ Exam Date _____

Procedure Element	Yes	No
1. Representative sample(s) of the production aggregates obtained per AASHTO T2?	_____	_____
2. Aggregate dried in an oven to a constant mass?	_____	_____
3. Aggregate sieved over designated sieves for class of mix being tested?	_____	_____
4. Material retained on each sieve placed in separate containers?	_____	_____
5. Separated aggregates washed, except the portion passing the No. 200 (0.075mm) sieve, in accordance with FOP for AASHTO T11, T27?	_____	_____
6. Washed aggregate samples dried in an oven to a constant mass?	_____	_____
7. Aggregate recombined to match the grading of the job mix formula?	_____	_____
8. Sample size determined by the specific test procedure to be performed?	_____	_____

Comments: First attempt: Pass ☐ Fail ☐ Second attempt: Pass ☐ Fail ☐

_____

_____

_____

_____

_____

_____

_____

_____

_____

_____

Signature of Examiner _____

WSDOT Test Method No. 726

Mixing Procedure for Asphalt Concrete

1. SCOPE

   This is the mixing procedure for laboratory prepared specimens of asphalt concrete, asphalt treated base, or open graded asphalt products. The aggregates used in this procedure are prepared by means of WSDOT Test Method No. 724.

2. EQUIPMENT

   a. Mixing Spoon — A large metal spoon capable of handling hot mix asphalt.

   b. Scoop — A metal scoop of ample size, capable of handling hot mix asphalt.

   c. Curing Pan — A heat resistant pan of ample size to handle samples of hot mix asphalt.

   d. Mixing Bowl — A heat resistant bowl for hand mixing or mechanical mixer of ample size to handle samples of hot mix asphalt.

   e. Mechanical Mixer — A mechanical mixer with heat source may be used in lieu of hand mixing.

   f. Balance — The balance shall have capacity of 11 kg and sensitive to 0.1 gm.

   g. Oven — An oven of appropriate size, capable of maintaining a uniform temperature within the allowable tolerance for the grade of asphalt.

3. PROCEDURE

   a. Place samples of aggregate in oven preheated to mixing temperature specified from supplier of asphalt binder or as indicated on mix design report for at least 2 hours.

   b. Heat asphalt and mixing bowl(s) to mix temperature specified from supplier of asphalt binder or as indicated on mix design report.

   c. Stir the asphalt binder and verify that the temperature of asphalt binder is within the temperature recommended by the asphalt supplier or as indicated on mix design report.

   d. After materials are heated place mixing bowl on balance and tare.

   e. Place heated aggregate in mixing bowl.

   f. Form a crater in the aggregate and weigh in asphalt in accordance with design information (if mixing bowl is not buttered an additional sample should be prepared, mixed and then discarded to properly coat the mixing bowl with asphalt and fines).

   g. Mix aggregate and asphalt for approximately 3 minutes or until aggregate is completely coated with asphalt. This can be accomplished by hand mixing or by mechanical mixer.

   h. Transfer mixed material to the labeled heat resistant pan for curing or other testing as required.

   i. Repeat steps A thru H for each sample to be mixed.

Performance Exam Checklist

Mixing Procedure for Asphalt Concrete
WSDOT T 726

Technician_____

Date_____

		Test	Retest
1.	Aggregate samples prepared as per WSDOT Test Method T724?	_____	_____
2.	Mixing bowl(s), aggregate and asphalt binder heated to appropriate mixing temperature?	_____	_____
3.	Asphalt binder stirred and temperature confirmed by thermometer?.	_____	_____
4.	Heated mixing bowl and paddle placed on scale and scale then tared?	_____	_____
5.	Heated aggregate sample placed in bowl and scale then tared?	_____	_____
6.	Crater formed into center aggregate, weigh in asphalt binder in accordance with mix design information?	_____	_____
7.	Mix aggregate and asphalt for approximately 3 minutes or until aggregate is completely coated?	_____	_____
8.	When mixing is complete carefully scrape off mixing apparatus, tools and bowl is dumped into correctly marked pan?	_____	_____
9.	Repeat steps 4 - 8 for each sample to be mixed?	_____	_____

Comments: First attempt: Pass ☐ Fail ☐ Second attempt: Pass ☐ Fail ☐

_____

_____

_____

_____

_____

_____

_____

_____

_____

_____

WSDOT Standard Operating Procedure SOP 728

Method for Determining the Ignition Furnace Calibration Factor (IFCF) for Hot Mix Asphalt (HMA)

1. SCOPE

   This method may be affected by the type of aggregate in the mixture. Accordingly, to optimize accuracy, a calibration factor will be established with the testing of a set of HMA calibration samples for each mix type. This procedure must be performed before any acceptance testing is completed.

   The calibration process should be repeated each time there is a significant change in the mix ingredients or design.

2. APPARATUS

   a. Equipment as described to perform AASHTO T 308 Method A.

3. SAMPLE PREPARATION

   a. Prepare a minimum of two HMA calibration samples in accordance with WSDOT Test Method No. 724 and No. 726 or use previously prepared HMA calibration samples.

   b. If the HMA calibration samples are not sufficiently soft to separate for testing, carefully heat the samples in an oven until sufficiently soft and no appreciable moisture exists, not to exceed 325°F (163°C). Do not heat the sample basket assemblies.

4. PROCEDURE

   a. Test two HMA calibration samples in accordance with AASHTO T 308.

   b. Determine the measured asphalt contents for each sample from the printed tickets.

   c. If the difference between the measured asphalt contents of the two samples exceeds 0.15 percent, test two additional HMA calibration samples. From the four tests, discard the high and low results and determine the IFCF from the two remaining results. Calculate the difference between the actual and measured asphalt contents for each sample. The IFCF is the average of the differences expressed in percent by mass of the asphalt mixture.

WSDOT Standard Operating Procedure SOP 729

In-Place Density of Bituminous Mixes Using the Nucelar Moisture-Densty Gauge FOP for WAQTC TM 8

Number and Locations of Nuclear Tests

Control lots representing 400 tons (400 metric tonnes) or less of mix shall be established. Nuclear gauge tests for compaction control during paving construction shall be taken at a minimum of five locations per control lot. The locations will be picked at random by WSDOT Test Method No. 716.

Acceptance

a. For acceptable compaction, nuclear gauge test results for the control shall be as required by current specifications or contract plans.

b. The percent compaction equals the average of two inplace nuclear gauge wet density readings times the gauge correlation factor divided by the current average “Rice” density multiplied by 100.

$$\text{percent compaction} = \frac{(WD)\ (CF)}{\text{Avg. Gmm}}\ (100)$$

WD = average of two inplace nuclear gauge wet density readings.

CF = gauge correlation factor.

Average Gmm = Avg. “Rice” Density

WSDOT Standard Operating Procedure SOP 730

Correlation of Nuclear Gauge Determined Densities With Asphalt Concrete Pavement Cores

1. Gauge-core correlation shall be required for statistical evaluation of degree of asphalt compaction.
   a. For each combination of gauge and initial job mix formula.
   b. For direct transmission and for back scatter modes (when used).
   c. For a change in direct transmission probe depth.
2. A new gauge-core correlation is not required.
   a. For different contracts if JMF and gauge are the same.
   a. For a change in bases (i.e., surfacing to overlay).
   a. When the job mix formula has been adjusted in accordance with Section 9-03.8(6)A of the *Standard Specifications*.
3. Gauge correlation is based on 10 density determinations and 10 cores taken at corresponding locations. Gauge densities shall be determined on the day of paving. Cores should be taken no later than the day following paving and before traffic has been allowed on roadway. The sites for correlation cores do not have to be record density core sites and therefore consideration should be given to selecting sites out of the travel way.
4. Obtain a pavement core from each of the test sites. The core should be taken between the two nuclear gauge footprints. If direct transmission was used, locate the core at least 1 in. (25 mm) away from the edge of the drive pin hole.
5. Core densities shall be determined in conformance with AASHTO T 166 Bulk Specific Gravity of Compacted Bituminous Mixtures Using Saturated Surface-Dry Specimens or AASHTO 275 Bulk Specific Gravity of Compacted Bituminous Mixtures Using Paraffin-Coated Specimens.
6. Correlation factor shall be determined using Standard Form 350-112: Correlation Nuclear Gauge to Core Density, or other comparable forms.

WSDOT Test Method No. 802

Method of Test for Flexural Strength of Concrete (Using Simple Beam With Center-Point Loading)

1. SCOPE

   a. This method is similar to AASHTO T 177 and covers the procedure for determining the flexural strength of concrete by the use of a simple beam with center-point loading.

2. APPARATUS

   a. The center-point loading method shall be used in the laboratory. The testing machine shall conform to the requirements of Sections 15, 16, and 17 of the Methods of Verification of Testing Machines (AASHTO T 67). In the field, a manually operated calibrated jack shall be used in conjunction with the field testing machine supplied by the Regional Materials Engineer. The apparatus shall incorporate the following requirements. The load shall be applied at the center point of the span, normal to the loaded surface of the beam, employing bearing blocks designed to ensure that forces applied to the beam will be vertical only and applied without eccentricity. The direction of the reactions shall be parallel to the direction of the applied load at all times during the test. The load shall be applied at a uniform rate and in such a manner as to avoid shock. The edges of the load-applying block and of the supports shall not depart from a plane by more than .002 in. (0.051 mm).

   b. Caliper — A 12-in. (1300 mm) long caliper accurate to 0.01 in. (0.25 mm).

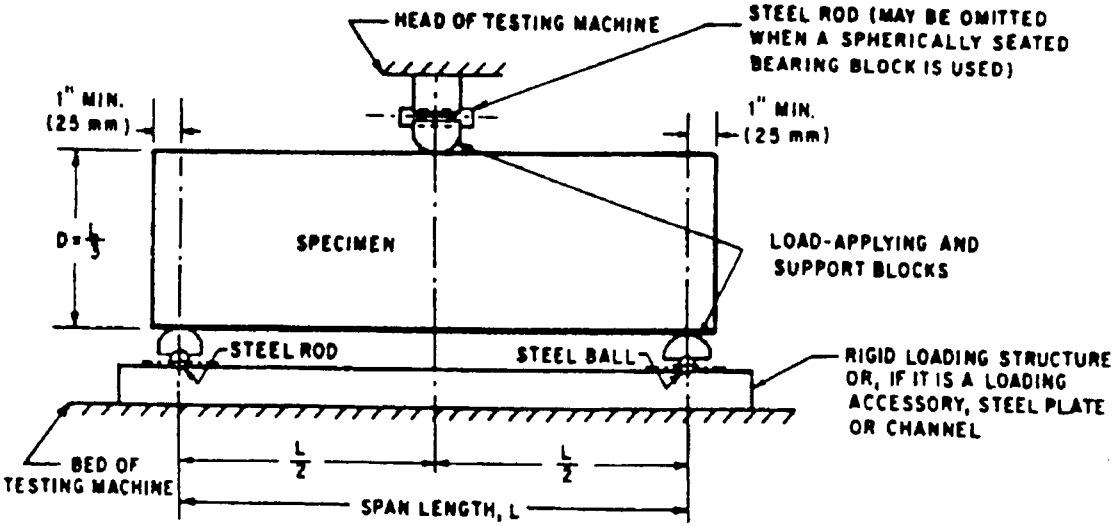

NOTE—Apparatus may be used inverted.

Figure 1: Diagrammatic View of Apparatus for Flexure Test of Concrete by Center-point Loading Method

3. TEST SPECIMEN

   a. As nearly as practicable, the test specimen, as tested, shall have a span three times its depth. The test specimen shall be formed and stored as prescribed in WSDOT Test Method No. 808.

4. PROCEDURE

a. Turn the specimen on its side with respect to its position when molded, and center it on the supporting bearing blocks. The load-applying block shall be brought in contact with the upper surface at the center line between the supports.

b. Bring load applying block in full contact with the beam surface by applying a 100 lbs. (3.1 N) preload. Check to ensure that the beam is in uniform contact with the bearing blocks and the load applying block.

c. If load is applied with a hand pump, load the beam by applying the load at a rate of one full pump stroke per second. When the applied load is about 4,000 lbs. (125 N), reduce the full pump stroke to about a ½-pump stroke and maintain the one second stroke rate.

Rate of load application for screw power machines, with the moving head operating at 0.05 in. (1.3 mm) per minute when the machine is running idle, is acceptable.

5. MEASUREMENT OF SPECIMENS

a. Determine the beam dimensions, width (b) and depth (d), by averaging two measurements for width and two measurements for depth. The measurements shall be taken at the failure plane to an accuracy of 0.05 in. (1.3 mm).

6. CALCULATION

a. The modulus of rupture is calculated as follows:

$$R = \frac{3Pl}{2bd^2}$$

where:

R = Modulus of rupture in psi or MPa

P = Maximum applied load indicated by the testing machine in lb•f or N

l = Span length in inches or mm

b = Average width of specimen in inches or mm

d = Average depth of specimen in inches or mm

7. REPORT

a. The report shall include the following:

(1) Identification number,

(2) Average width,

(3) Average depth,

(4) Span length in inches or mm,

(5) Maximum applied load in lb•f or N,

(6) Modulus of rupture calculated to the nearest 5 psi (0.03 MPa),

(7) Defects in specimen, and

(8) Age of specimen.

b. All test results will be reported on DOT Form 350-042.

Performance Exam Checklist

Method of Test for Flexural Strength of Concrete (Using Simple Beam With Center-Point Loading)
WSDOT Test Method 802

Participant Name _____ Exam Date _____

Procedure Element	**Yes**	**No**
1. Copy of current procedure available at test site?	_____	_____
2. In the field, Jack properly calibrated?	_____	_____
3. Beam turned on its side with respect to its position when molded, and centered on the supporting bearing blocks?	_____	_____
4. Load applying block brought into contact with the beam at the center line between the supports?	_____	_____
5. 100 lbs. (3.1 N) preload applied and the beam then checked to ensure uniform contact with the bearing blocks and load applying block?	_____	_____
6. Load applied to the beam at the proper uniform rate?	_____	_____
Equipment		
1. Where required are calibration/verifications tags present on equipment used in this procedure?	_____	_____
2. All equipment functions according to the requirements of this procedure?	_____	_____

Comments: First attempt: Pass ☐ Fail ☐ Second attempt: Pass ☐ Fail ☐

_____

_____

_____

_____

_____

_____

_____

Signature of Examiner _____

WSDOT FOP for ASTM C 805[1]

Rebound Hammer Determination of Compressive Strength of Hardened Concrete

1. SCOPE

   This test method is not intended as an alternative for strength determination. If the proper method is used, by an experienced operator, it can be a useful tool in estimating strength. In some specifications it has been designated as a criteria for evaluating early strength gain for opening work to traffic. The procedure provided herein is in conformance with ASTM C 805. In case of any apparent conflicts the procedure from the referenced standard shall apply. It is recommended that the region is notified, or assistants with field testing.

2. EQUIPMENT

   a. Use hammer type N for testing concrete in building and bridge construction.

   b. Rebound hammers shall be serviced and verified/calibrated at least annually using a calibration anvil, semiannually if in heavy use. Interim checks against a newly-adjusted hammer are recommended.

   c. Immediately after calibration a consistent object, such as a column or foundation should be tested and record the average readings. This item can now be used as a reference, in the same way as an anvil.

3. SELECTION OF TEST LOCATION

   a. Vertical, formed surfaces of concrete structures are preferred.

   b. Avoid form joints, honeycombs, raked surfaces, and porous areas. Avoid thin structural parts and specimens less than 4 in. (100 mm) thick.

4. PREPARATION OF TEST LOCATION

   a. Before testing, remove any plasterwork or coating or the cement slurry from the top surface of the concrete

   b. Slightly uneven surfaces shall be smoothed by hand with the carborundum stone supplied with the hammer.

   c. A minimum area of 6 in. (150 mm) in diameter will be ground to permit 10 test hammer impacts to be made on the mortar without hitting coarse aggregate particles.

   d With old concrete the excessively hard surface layer must be removed to a depth of about ½ in. (13 mm) For this work a high speed, hand-held, power grinder should be sufficient.

5. TESTING THE SPECIMEN

   a. Lightly pressing on the head of the impact plunger, release the plunger and allow it to slide out of the housing.

   b. Press the plunger against the point of the concrete surface to be tested, holding the hammer exactly at right angles to the surface being tested. Maintain pressure on the instrument and slowly increase the pressure on the housing to effect release of the plunger. Just before it disappears completely in the housing, the hammer is released.

[1]This FOP is based on ASTM C 805-94.

c. After the impact, the hammer mass rebounds by a certain amount which is indicated on the scale by the rider. Do not touch the push-button lock mechanism until after the hammer is released and has stabilized.

d. Estimate the rebound number on the scale to the nearest whole number and record the rebound number.

e. By simply removing the hammer from the spot tested, it is reset for a further test and at the same time the indication is canceled. The rider never returns quite to zero while the plunger is in its extended position.

f. Take ten readings from each test area. No two impact tests shall be closer together than 1 in. (25 mm). Examine the impression made on the surface after impact, and if the impact crushes or breaks through a near-surface air void disregard the reading and take another reading.

g. After having finished the tests, the plunger is locked in its rear position by means of the push-button. Locking should always be done after releasing the impact, with the plunger still inside the housing. The lock also serves for fixing the rebound reading after impact tests in dark or not easily accessible locations.

6. CALCULATION OF REBOUND NUMBERS AND INTERPRETATION OF REBOUND VALUES

a. Discard readings differing from the average of 10 readings by more than 6 units and determine the average of the remaining readings. If more than two readings differ from the average by six units, discard the entire set of readings and determine rebound numbers at 10 new locations within the test area.

b. Converting the rebound number to estimated compressive strength (psi) (Mpa) shall be done after calculating the average of at least ten readings. Compute the average reading of the ten values accumulated. Convert this reading to estimated compressive strength using the calibration scale on the side of the hammer.

c. The test hammer is calibrated for horizontal impact direction, for testing vertical surfaces. On the side of the test hammer there is a label showing the curves used to convert rebound values to estimated compressive strength. If you are testing a vertical surface you use the 0° scale.

d. When using it on inclined or horizontal surfaces, the rebound value must be corrected. To correct the reading for an inclination angle, testing in an upwards direction use the +45° or +90° curves, testing downwards use the –45° or –90° curves. The direction of impact, horizontal, downward or upward must be the same for readings to be compared, unless a correction factor is established.

7. REPORTING TEST INFORMATION

All of the following should be recorded, if known:

Date and time of testing.

Identification of location tested in the concrete construction and the type and size of member tested.

Design strength of concrete tested.

Surface characteristics.

If the surface was ground and depth of grinding for older (+/yr) concrete.

Type of form material used.

Curing conditions and type of exposure to the environment.

Hammer identification, serial number, and date of last calibration/verification.

Air temperature at the time of testing.

Orientation of hammer during test.

Individual rebound test readings and average rebound number for each area tested.

Remarks regarding discarded readings or unusual conditions.

8. OTHER FACTORS THAT MAY AFFECT TEST RESULTS

Concrete at 32°F (0°C) or less may exhibit high rebound values, as will near surface coarse aggregate. The temperature of the hammer itself may affect the rebound number. Rebound hammers at 0°F (–22°C) may exhibit lower readings. A lightweight aggregate mix may also show lower readings.

9. REFERENCED DOCUMENTS

ASTM Standard C805-94.

Operating instructions, Schmidt Concrete Test Hammer.

Performance Exam Checklist

Rebound Hammer Determination of Compressive Strength of Hardened Concrete

Participant Name _____ Exam Date _____

Procedure Element	**Yes**	**No**
1. Copy of current procedure available at test site?	_____	_____
2. Hammer properly serviced and calibrated or verified?	_____	_____
3. Test location properly prepared?	_____	_____
4. Test location meets minimum size requirement?	_____	_____
5. Ten acceptable readings taken in each test area?	_____	_____
6. Readings properly spaced in test area?	_____	_____
7. Test readings properly converted to estimated strength?	_____	_____
8. Test information properly recorded?	_____	_____
Equipment		
9. Where required are calibration/verifications tags present on equipment used in this procedure?	_____	_____
10. All equipment functions according to the requirements of this procedure?	_____	_____

Comments: First attempt: Pass ☐ Fail ☐ Second attempt: Pass ☐ Fail ☐

_____

_____

_____

_____

_____

_____

_____

_____

_____

Signature of Examiner _____

WSDOT Test Method No. 807

Method of Operation of California Profilograph and Evaluation of Profiles

1. SCOPE

   a. The operation of the California Profilograph, the procedure used for determining the Profile Index from profilograms of pavements made with the Profilograph, and the procedure used to locate individual high points in excess of 0.3 in. (7.62 mm) are described in Parts I, II, and III, respectively, in this test method.

Part I

Operation of the California Profilograph

2. PROCEDURE

   a. Equipment

   The California Profilograph consists of a frame 25 LF (7.62 m) long supported upon multiple wheels at either end arranged in a staggered pattern such that no two wheels cross the same bump at the same time. The profile is recorded from the vertical movement of a wheel attached to the frame at midpoint and is in reference to the mean elevation of the 12 points of contact with the road surface established by the support wheels (see Figure 1). The profilogram is recorded on a scale of 1 in. = 25 LF (25 mm = 7620 mm) longitudinally and 25 mm = 25 mm (or full scale) vertically. Motive power is provided manually.

   b. Operation

   The instructions for assembling the Profilograph are contained in a booklet accompanying each unit. Particular attention should be paid to the listed precautions.

   In operation, the Profilograph should be moved at a speed no greater than a walk so as to eliminate as much bounce as possible. Too high a speed will result in a profilogram that is difficult to evaluate.

   Calibration of the Profilograph should be checked periodically. The horizontal scale can be checked by running a known distance and scaling the result on the profilogram. If the scale is off, the profile wheel should be changed to one of a proper diameter. The vertical scale is checked by putting a board of known thickness under the profile wheel and again scaling the result on the profilogram. If the scale is off, the cause of the incorrect height should be determined and corrected.

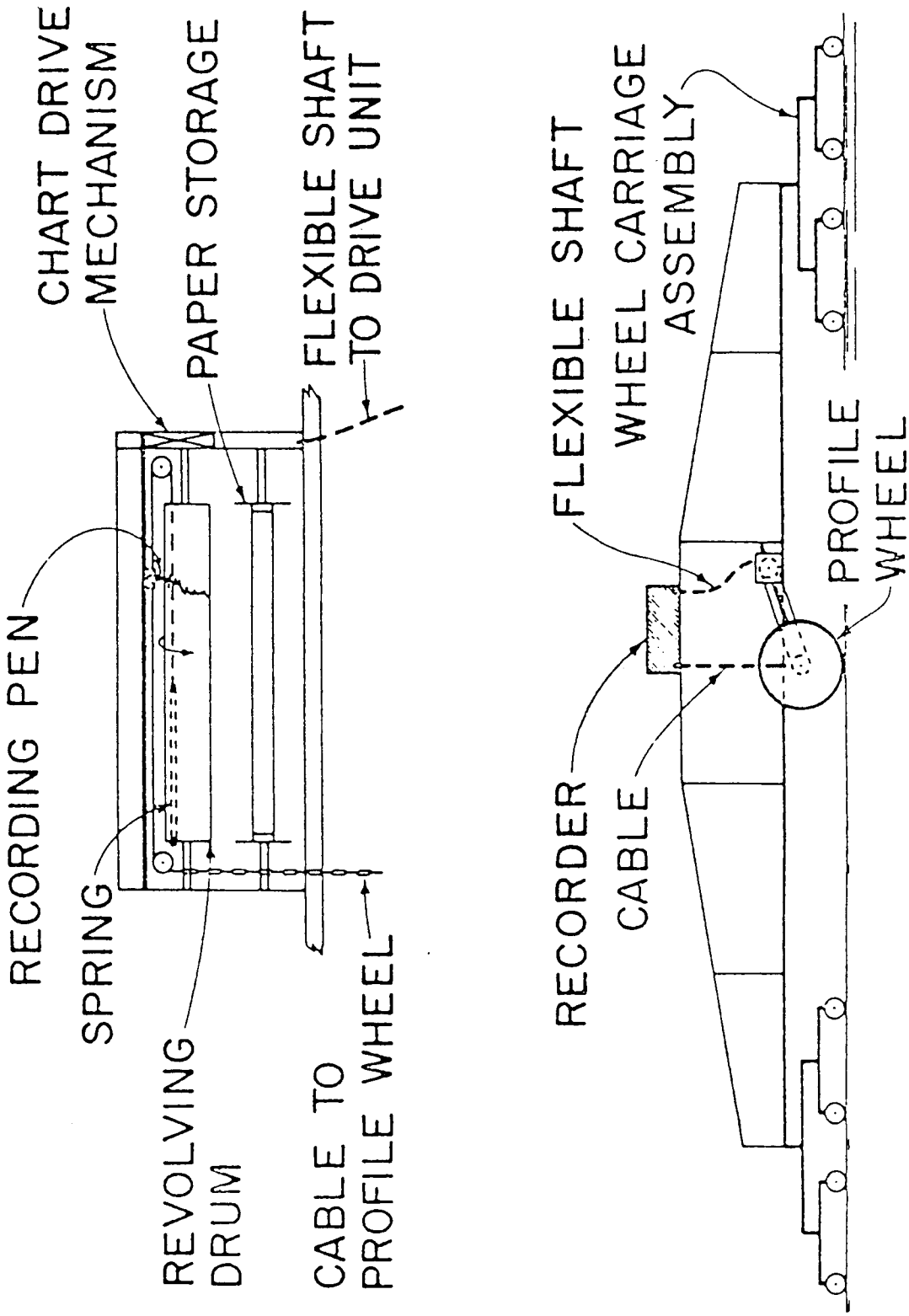
CHART DRIVE MECHANISM
PAPER STORAGE
FLEXIBLE SHAFT TO DRIVE UNIT
RECORDING PEN
SPRING
REVOLVING DRUM
CABLE TO PROFILE WHEEL
FLEXIBLE SHAFT
WHEEL CARRIAGE ASSEMBLY
PROFILE WHEEL
RECORDER CABLE

Figure 1

3. PROCEDURE

a. Equipment

To determine the Profile Index, use a plastic scale 1.70 LF (43.18 mm) wide and 1.70 in. (536.45 mm) long representing a pavement length of 528 LF (161 m) at a scale of 25 mm = 7.62 m a plastic scale for the Profilograph may be obtained by the districts from the OSC Materials Laboratory. Near the center of the scale is an opaque band 0.2 in. (5.1 mm) wide extending the entire length of 21.12 in. (536.45 mm). On either side of this band are scribed lines 0.1 in. (2.54 mm) apart, parallel to the opaque band. These lines serve as a convenient scale to measure deviations or excursions of the graph above or below the blanking band. These are called “scallops.”

b. Method of Counting

Place the plastic scale over the profile in such a way as to “blank out” as much of the profile as possible. When this is done, scallops above and below the blanking band usually will be approximately balanced. See Figure 2.

The profile trace will move from a generally horizontal position when going around super-elevated curves making it impossible to blank out the central portion of the trace without shifting the scale. When such a condition occurs, the profile should be broken into short sections and the blanking band repositioned on each section while counting as shown in the upper part of Figure 3.

Starting at the right end of the scale, measure and total the height of all the scallops appearing both above and below the blanking band, measuring each scallop to the nearest 0.05 in. (1.27 mm) (half a tenth). Write this total on the profile sheet near the left end of the scale together with a small mark to align the scale when moving to the next section. Short portions of the profile line may be visible outside the blanking band but unless they project 0.03 in. (0.762 mm) or more and extend longitudinally for 2 LF (610 mm) (0.8 in. (2 mm) on the profilogram) or more, they are not included in the count. (See Figure 2 for illustration of these special conditions.)

When scallops occurring in the first 0.1 mile (161 m) are totaled, slide the scale to the left, aligning the right end of the scale with the small mark previously made, and proceed with the counting in the same manner. The last section counted may or may not be an even 0.1 mile (161 m). If not, its length should be scaled to determine its length in kilometers. An example follows:

	Section length, miles (km)	**Counts, tenth of an in.**
	0.10 (0.16)	5.0
	0.10 (0.16)	4.0
	0.10 (0.16)	3.5
400 ft. =	0.076	2.0
Total	0.376	14.5

The Profile Index is determined as “inches per mile in excess of the 0.2 in. (5.1 mm) blanking band” but is simply called the Profile Index. The procedure for converting counts of Profile Index is as follows:

Using the figures from the above example:

Length = 0.376 mi. (0.605 km), total count = 14.5 tenths of an inch

$$\text{Profile Index} = \frac{\text{1 mi. (1 km)}}{\text{length of profiles in miles (km)}} \times \text{a total count in mm}$$

$$\text{Pr I} = \frac{\text{1 mi. (1 km)}}{\text{0.376 mi. (0.605 km)}} \times 1.45 = 3.9$$

(Note that the formula uses the count in inches rather than tenths of a inch and is obtained by dividing the count by ten.)

The Profile Index is thus determined for the profile of any line called for in the specifications.

To determine the daily profile index to check the Contractors methods and procedures, profile indexes may be averaged for two or more profiles of the same section of road if the profiles are the same length.

Example:

		Counts, tenths of an inch	
	Section length, mi. (km)	**Left wheel track**	**Right wheel track**
	0.26 (0.10)	5.0	4.5
	0.26 (0.10)	4.0	5.0
	0.26 (0.10)	3.5	3.0
400 LF =	0/0 mi. (0.076)	2.0	1.5
Total	0.376	14.5	14.0
PrI (by formula)		3.9	3.7

$$\text{Averages} = \frac{3.9 + 3.7}{2} = 3.8$$

The specifications state which profiles to use when computing the average Profile Index for control of construction operations.

c. Limitations of Count in 0.1 mi. (0.1 km) Sections

When the specifications limit the amount of roughness in “any one-tenth mile section,” the scale is moved along the profile and counts made at various locations to find those sections if any, that do not conform to specifications. The limits are then noted on the profile and can be later located on the pavement preparatory to grinding.

d. Limits of Counts — Joints

When counting profiles, a day’s paving is considered to include the last portion of the previous day’s work, which includes the daily joint. The last 15 to 30 LF (4.57 to 9.14 m) of a day’s paving cannot usually be obtained until the following day. In general, the paving contractor is responsible for the smoothness of joints if he places the concrete pavement on both sides of the joint. On the other hand, the contractor is responsible only for the pavement placed by him if the work abuts a bridge or a pavement placed under another contract. Profilograph readings when approaching such joints should be taken in conformance with current specifications.

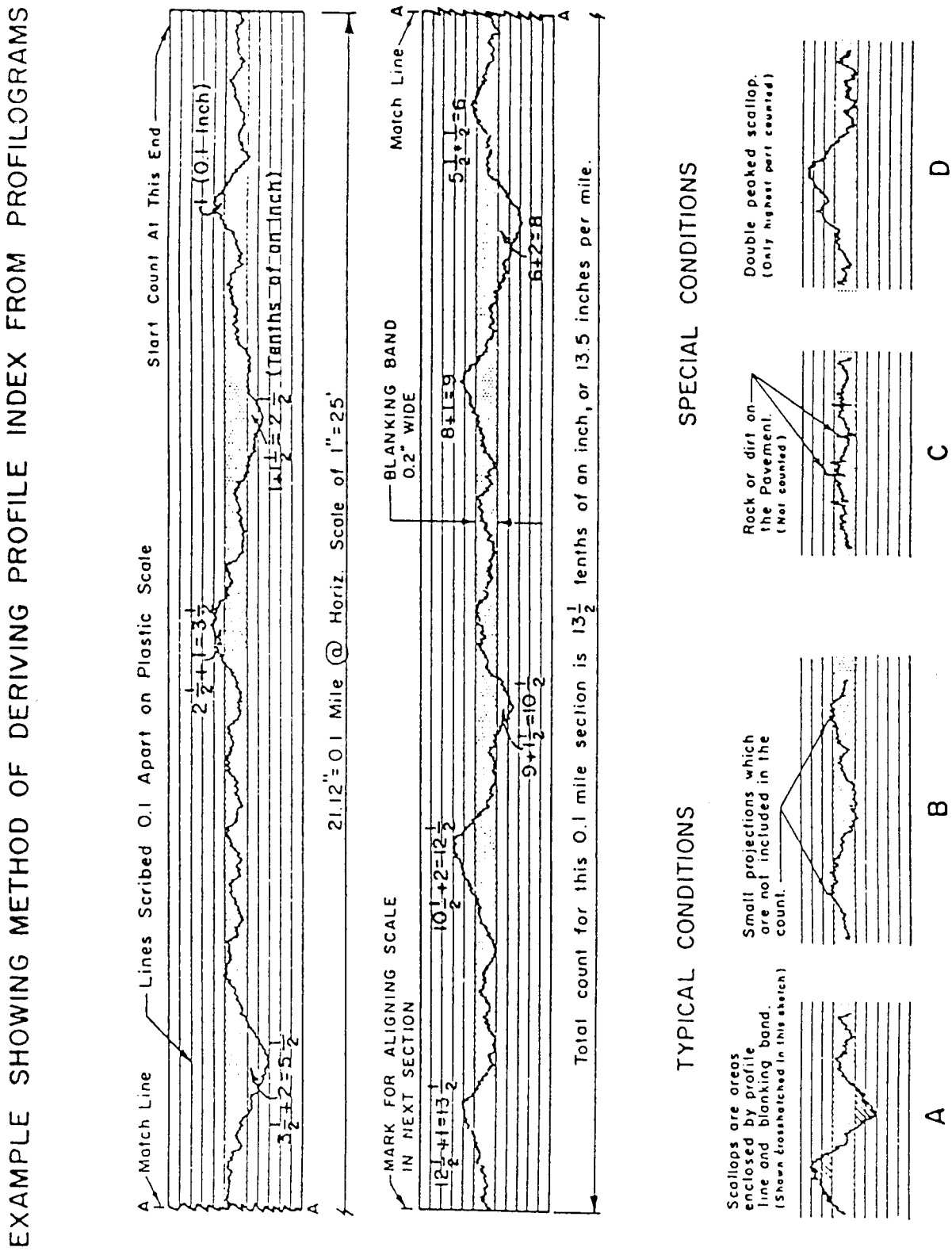
EXAMPLE SHOWING METHOD OF DERIVING PROFILE INDEX FROM PROFILOGRAMS
Match Line
Lines Scribed 0.1 Apart on Plastic Scale
Start Count At This End
(0.1 Inch)
(Tenths of an Inch)
21.12" = 0.1 Mile @ Horiz. Scale of 1" = 25'
Match Line
BLANKING BAND 0.2" WIDE
MARK FOR ALIGNING SCALE IN NEXT SECTION
Total count for this 0.1 mile section is 13½ tenths of an inch, or 13.5 inches per mile.
TYPICAL CONDITIONS
Scallops are areas enclosed by profile line and blanking band. (Shown crosshatched in this sketch)
Small projections which are not included in the count.
SPECIAL CONDITIONS
Rock or dirt on the Pavement. (Not counted)
Double peaked scallop. (Only highest part counted)
A
B
C
D

Figure 2

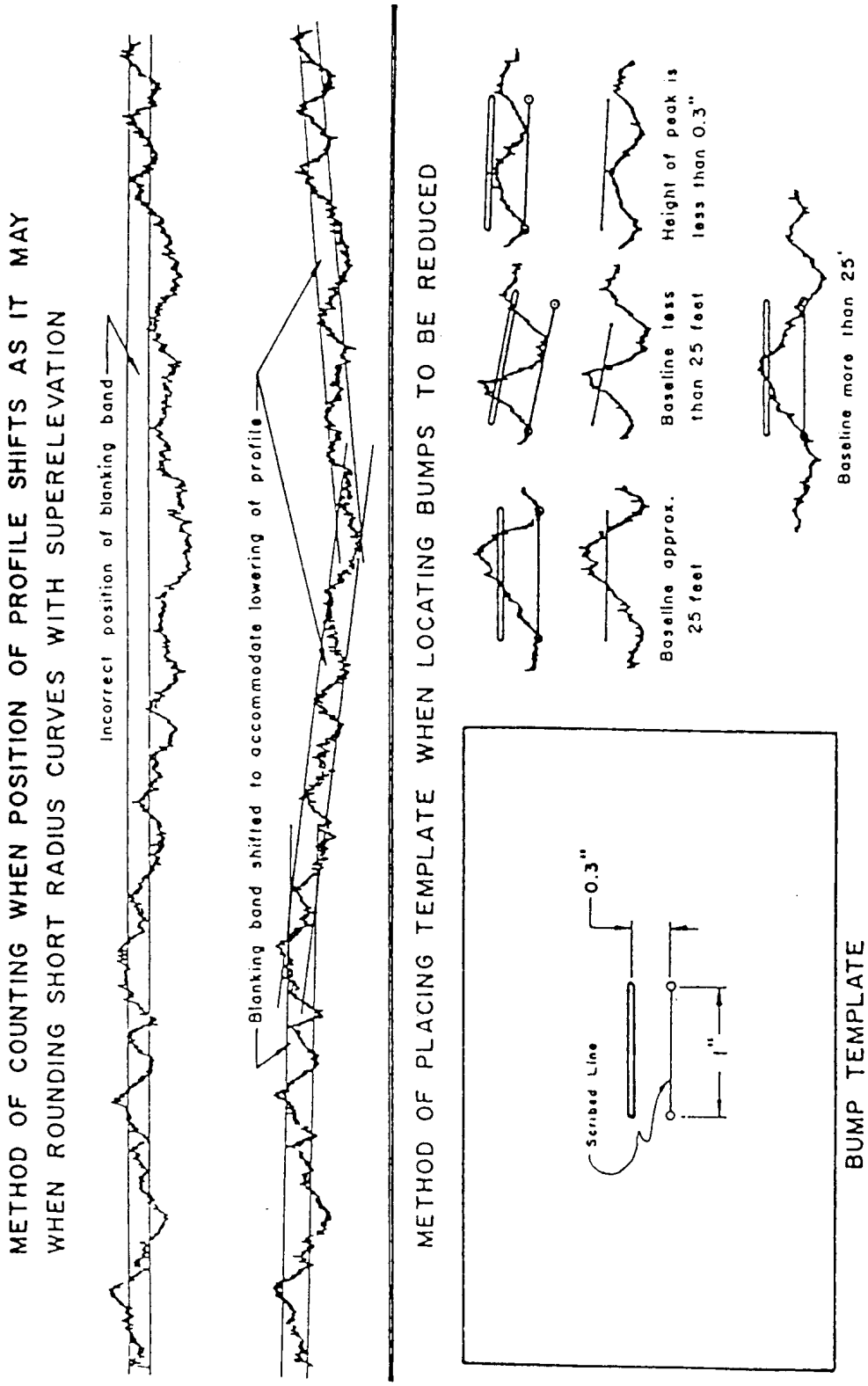
METHOD OF COUNTING WHEN POSITION OF PROFILE SHIFTS AS IT MAY
WHEN ROUNDING SHORT RADIUS CURVES WITH SUPERELEVATION
Incorrect position of blanking band
Blanking band shifted to accommodate lowering of profile
METHOD OF PLACING TEMPLATE WHEN LOCATING BUMPS TO BE REDUCED
Baseline approx. 25 feet
Baseline less than 25 feet
Height of peak is less than 0.3"
Baseline more than 25'
0.3"
Scribed Line
1"
BUMP TEMPLATE

Figure 3

Part III

Determination of High Points in Excess of 0.3 in. (7.62 mm)

4. PROCEDURE

a. Equipment

Use a plastic template having a line 1 in. (25.4 mm) long scribed on one face with a small hole or scribed mark at either end, and a slot 0.3 in. (7.62 m) from and parallel to the scribed line. See Figure 3. (The 1 in. (25.4 mm) line corresponds to a horizontal distance of 0.3 in. (7.62 m) on the horizontal scale of the profilogram.) The plastic template may be obtained from the Olympia Service Center Materials Laboratory.

b. Locating High Points in Excess of 0.3 in. (7.62 m).

At each prominent peak or high point on the profile trace, place the template so that the small holes or scribe marks at each end of the scribed line intersect the profile trace to form a chord across the base of the peak or indicated bump. The line on the template need not be horizontal. With a sharp pencil, draw a line using the narrow slot in the template as a guide. Any portion of the trace extending above this line will indicate the approximate length and height of the deviation in excess of 0.3 in. (7.62 m).

There may be instances where the distance between easily recognizable low points is less than 1 in. (25.4 mm) (30 LF (7.62 m)). In such cases, a shorter chord length shall be used in making the scribed line on the template tangent to the trace at the low points. It is the intent, however, of this requirement that the baseline for measuring the height of bumps will be as near 30 LF (7.62 m) (1 in. (25.4 mm)) as possible, but in no case to exceed this value. When the distance between prominent low points is greater than 0.3 in. (7.62 m) (1 in. (25.4 mm)), make the ends of the scribed line intersect the profile trace when the template is in a nearly horizontal position. A few examples of the procedure are shown in the lower portion of Figure 3.

WSDOT Test Method No. 808

Method for Making Flexural Test Beams

1. SCOPE

   a. This method covers the procedures for molding and curing Portland cement concrete flexural test beams.

2. EQUIPMENT

   a. Test beam molds, 6 in × 6 in. × 21 ± ½ in. (150 mm × 150 mm × 550 ± 13 mm) or 8 in. × 8 in. × 26 ± ½ in. (200 mm × 200 mm × 670 ± 13 mm).

   b. Vibrator, capable of 7,000 vibrations per minute with a diameter not less than ¾ in. (19.0 mm) or greater than 1 ½ in. (38.1 mm).

   c. Tamping Rod — The tamping rod is a round, straight steel rod ⅝ in. (16.0 mm) diameter and approximately 24 in. (610 mm) long, having the tamping end rounded to a ⅝ in. (16.0 mm) diameter hemispherical tip.

   d. Mallet — A mallet with a rubber or rawhide head weighing 1.25 ± 0.50 lb. (0.57 ± 0.23 kg).

   e. Assorted tools such as scoops, shovels, etc.

3. PROCEDURE

   a. For laboratory made beam specimens, mix sufficient concrete to make all the required specimens from one batch. Each beam specimen requires approximately .45 yd.^{3} (0.015 m^3) of concrete.

      For field-made beam specimens, the concrete sample is obtained in accordance with WSDOT Test Method No. 803, Method of Sampling Fresh Concrete. Making of the beam specimens shall begin within 15 minutes of remixing the sample.

   b. Mold specimens as near as practicable to the place where they are to be stored during the first 24 hours.

   c. Assemble the molds on a rigid surface free from vibration and other disturbances. Remix the concrete to a uniform appearance. When the method of consolidation is by internal vibrators, the mold is filled in a single layer. Make sure that each shovel or scoop of concrete is representative of the batch. When the method of consolidation is by rodding, the mold is filled in two layers with each layer being rodded one time for each 2 in.^{2} (1290 mm^2) of surface area. The rodding should be distributed evenly over the entire surface. On the succeeding layers, the rod should not penetrate the previous layer more than ½ in. (13 mm). After each layer is rodded, tap the outsides of the mold lightly 10 to 15 times with a mallet.

   d. Insert the vibrator at intervals not to exceed 6 in. (150 mm) along the centerline of the long dimension of the beam. For specimens wider than 6 in. (150 mm), use alternating insertions along two lines at least 2 in. (50 mm) away from the sides of the mold. Withdraw the vibrator so that no air voids are left in the concrete. Then tap the mold lightly 10-15 times with mallet.

   e. Finish the surface of the concrete by striking off with a straightedge. Use the minimum amount of manipulation necessary to leave a flat surface that has no depressions or projections larger than ⅛ in. (3.2 mm) and is level with the sides of the mold.

f. The top surface of the laboratory-made specimen shall be covered with a saturated towel and a plastic sheet to prevent moisture loss from the concrete.

For the field made specimen, the top surface of the beam shall be sprayed with the same curing compound as is used for the pavement and covered with a plastic tarpaulin.

4. STORAGE AND HANDLING

The method of storing and handling the beam specimen depends on the purpose for which the beam is intended. Two methods are provided as follows:

a. Laboratory Method — Beam for determining the acceptability of a contractor-provided paving mix.

Cover the beam to prevent moisture loss and allow beam to remain undisturbed for an initial cure period of 24 ± 4 hours at a temperature of 60° to 80°F (16° to 27°C). After the initial cure period, the beam will be removed from the mold and within 30 minutes stored in saturated limewater at 73.4° ± 3°F (23° ± 2°C) for a minimum of 20 hours prior to testing. Surface drying of the beam between removal from the limewater and completion of testing shall be prevented. Relatively small amounts of drying of the test beam surfaces induces tensile stress in the extreme fibers that will markedly reduce the indicated flexural strength.

b. Field Method — Beam for determining the flexural strength of the inplace pavement.

After applying the curing compound to the top surface, cover the beam specimen with white reflective sheeting and allow beams to remain undisturbed for an initial cure period of 24 ± 4 hours at ambient conditions. After the initial cure period, remove the specimen from the mold and cure the specimen either by:

(1) Burying the specimen in wet sand making sure that the specimen is never allowed to become surface dry. Temperature of the sand should be similar to the concrete pavement temperature, or

(2) Wrap the beam in a saturated towel, place in a plastic bag, and seal the opening. The plastic should be at least 4 mils thick. Leave the specimen on the pavement in the vicinity where it was molded until time to test. Take specimen to the testing location and store in lime water at 73.4° ± 5°F (23° ± 2.8°C) for 24 ± 4 hours immediately before time of testing to ensure uniform moisture condition from specimen to specimen.

Note: The beam specimen must be kept in a surface moist condition or wet environment for the entire time in storage **and** testing. Even minor amounts of surface drying of the specimen induces extreme fiber stresses which can markedly reduce the flexural strength.

5. TESTING

a. Beam specimens are tested for flexural strength in accordance with WSDOT Test Method No. 802.

Performance Exam Checklist

Method for Making Flexural Test Beams
WSDOT T 808

Participant Name _____ Exam Date _____

Procedure Element	Yes	No
1. Copy of current procedure available at test site?	_____	_____
2. Making of test specimens begins within 15 minutes for sampling?	_____	_____
3. Assemble of molds on a rigid surface free from vibration and other disturbances?	_____	_____
4. Concrete remixed to a uniform appearance?	_____	_____
5. When method of concrete consolidation is by rodding:		
a. Mold filled in two layers?	_____	_____
b. Each layer rodded one time for each 2 in.^{2} (1290 mm) of mold surface area?	_____	_____
c. Rodding, evenly distributed over the entire surface area?	_____	_____
d. After rodding each layer, mold tapped lightly 10-15 times with mallet?	_____	_____
6. When method of concrete consolidation is by internal vibrators:		
a. Mold filled in a single layer?	_____	_____
b. Vibrator inserted at intervals not to exceed 6 in. (150 mm) along the centerline of the long dimension?	_____	_____
c. For molds wider than 6 in. (150 mm), vibrator inserted along two alternating lines at least 2 in. (50 mm) away from sides of mold?	_____	_____
d. Mold tapped lightly 10-15 times with mallet?	_____	_____
7. Top of mold properly finished?	_____	_____
8. Top of mold properly treated to prevent moisture loss?	_____	_____

Procedure Element	**Yes**	**No**
Equipment		
1. Where required are calibration/verifications tags present on equipment used in this procedure?	_____	_____
2. All equipment functions according to the requirements of this procedure?	_____	_____

Comments: First attempt: Pass ☐ Fail ☐ Second attempt: Pass ☐ Fail ☐

_____

_____

_____

_____

_____

_____

_____

_____

_____

_____

Signature of Examiner _____

WSDOT Test Method No. 810

Method of Test for Determination of the Density of Portland Cement Concrete Pavement Cores

1. SCOPE

   a. This method of test is a modification of AASHTO T 85 and is intended for use in determining the density of Portland cement concrete pavement cores. The object of this test is to determine the inplace density of the concrete as it exists approximately 24 hours after placement. This density is the value desired for comparison to the density of freshly mixed portland cement as determined by AASHTO T 121 When specific gravity values on absolute terms are required, AASHTO T 85 shall be used.

2. EQUIPMENT

   a. Balance — A balance having capacity of 5 kg or more and sensitive to 1 g or less.

   b. Wire Basket — A wire basket of No. 6 (3.35 mm) or No. 8 (2.36 mm) square mesh, of appropriate size.

   c. Container — A container suitable for immersing the wire basket in water, and an apparatus for suspending the wire basket from the center of the scale pan of the balance. Maintain a constant water level when weighing under water.

   d. Absorbent towels.

   e. A thermometer conforming to ASTM 17°F.

3. PROCEDURE

   a. Density determinations are made as soon as practicable after coring and with a minimum change in moisture content from the condition as taken. Where on-site determination is not practicable within one hour, cores are stored in airtight plastic bags or completely immersed in water until weighed. Core densities shall be determined within 4 hours after coring.

Table 1
Unit Mass of Water

Temperature °F	Pounds per Cubic Foot
60.0	62.366
65.0	62.336
70.0	62.301
73.4	62.274
75.0	62.261
80.0	62.216
85.0	62.166

   b. Wash thoroughly to remove dust or other coatings from the surface of the core. Place the sample in the wire basket and determine its mass in water. Determine this and all subsequent weights to the nearest gram. Determine the temperature of the water to the nearest degree.

c. Remove the sample from the water and roll it in a large absorbent cloth until all visible films of water are removed, although the surfaces still appear to be damp. Take care to avoid evaporation from aggregate pores during the operation of surface drying. Obtain the weight of the sample in the surface dry condition.

4. CALCULATION

a. Calculate the density as follows:

$$\text{Density (surface-dry basis)} = \frac{A}{A - B} \times d_w$$

where:

A = mass in grams of the surface-dry sample in air

B = mass in grams of the sample in water

d_w = density of the water at the test temperature (see Table 1)

Calculate the density to the nearest 0.1 lb. per ft.^{3} (1 kg per m^3).

5. REPRODUCIBILITY OF RESULTS

a. Duplicate determinations should check to within 0.1 lb. per ft.^{3} (3 kg per m^3).

6. REPORTS

a. The test results will be reported on the appropriate test data sheet.

WSDOT Test Method No. 813

Field Method of Fabrication of 50-mm (2-in.) Cube Specimens for Compressive Strength Testing of Grouts and Mortars

1. SCOPE

This method covers the fabrication of 50-mm (2-in.) cube specimens for compressive strength testing of grouts and mortars.

2. EQUIPMENT

a. Specimen Molds

Specimen molds for the 50 mm (2 in.) cube specimens shall be tight fitting. The molds shall not have more than three cube compartments and shall not be separable into more than two parts. The parts of the molds, when assembled, shall be positively held together. The molds shall be made of hard metal not attacked by the cement mortar. For new molds, the Rockwell hardness number shall not be less than HRB 55. The sides of the molds shall be sufficiently rigid to prevent spreading or warping. The interior faces of the molds shall be plane with a permissible variation of 0.002 in. (0.05 mm) for new molds and 0.002 in. (0.50 mm) for molds in use. The distances between opposite faces shall be 2 ± 0.02 in. (50 ± 0.50 mm). The height of each compartment shall be 1.985 in. to 2.01 in. (49.62 mm to 50.25 mm). The angle between adjacent interior faces, and between interior faces and top and bottom planes of the mold, shall be measured at points slightly removed from the intersection of the faces, and shall be 90± 0.5 degrees.

b. Base Plates

Base plates shall be made of a hard metal not attacked by cement mortar. The working surface shall be plane and shall be positively attached to the mold with screws into the side walls of the mold.

c. Cover Plates

Cover plat shall be made of a hard metal or glass not attacked by cement morter. The surface shall be relatively plane.

d. Tamper

The tamper shall be made of a nonabsorptive, nonabrasive, nonbrittle material such as a rubber compound having a Shore A durometer hardness of 80 + 10, or seasoned oak wood rendered nonabsorptive by immersion for 15 minutes in paraffin at approximately 392°F (200°C), and shall have a cross-section of ½ in. × 1 in. (13 mm × 25 mm) and a length of about 5 to 6 in. (125 to 150 mm). The tamping face shall be flat and at right angles to the length of the tamper.

e. Trowel

A trowel which has a steel blade 4 to 6 in. (100 to 150 mm) in length, with straightedges.

3. PROCEDURE

a. Three or more specimens shall be made for each period of test specified.

b. Seal the surfaces where the halves of the mold join by applying a coating of light cup grease. The amount should be sufficient to extrude slightly when the halves are tightened together. Repeat this process for attaching the mold to the base plate. Remove any excess grease.

c. Apply a thin coating of release agent to the interior faces of the mold and base plate. (WD-40 has been found to work well as a release agent) Wipe the mold faces and base plate as necessary to remove any excess release agent and to achieve a thin, even coating on the interior surfaces. Adequate coating is that which is just sufficient to allow a distinct fingerprint to remain following light finger pressure.

d. The grout or mortar shall be mixed according to the manufacturer's instructions. Begin molding the specimens within an elapsed time of not more than 2 ½ minutes from completion of the mixing.

e. For plastic mixes, place a first layer of mortar about 1 in. (25 mm) deep in all the cube compartments (about one-half the depth of the mold). Tamp the mortar in each cube compartment 32 times in about 10 seconds making four rounds, each round perpendicular to the other and consisting of eight adjoining strokes over the surface of the specimen, as illustrated in Figure 1, below. The tamping pressure should be just sufficient to ensure uniform filling of the molds. The four rounds of tamping (32 strokes) shall be completed in one cube before going on to the next. When the tamping of the first layer is completed, slightly over fill the compartments with the remaining mortar and then tamp as specified for the first layer. During tamping of the second layer, bring in the mortar forced out onto the tops of the molds after each round of tamping, by means of gloved fingers and the tamper, before starting the next round of tamping. On completion of tamping, the tops of all the cubes should extend slightly above the tops of the molds.

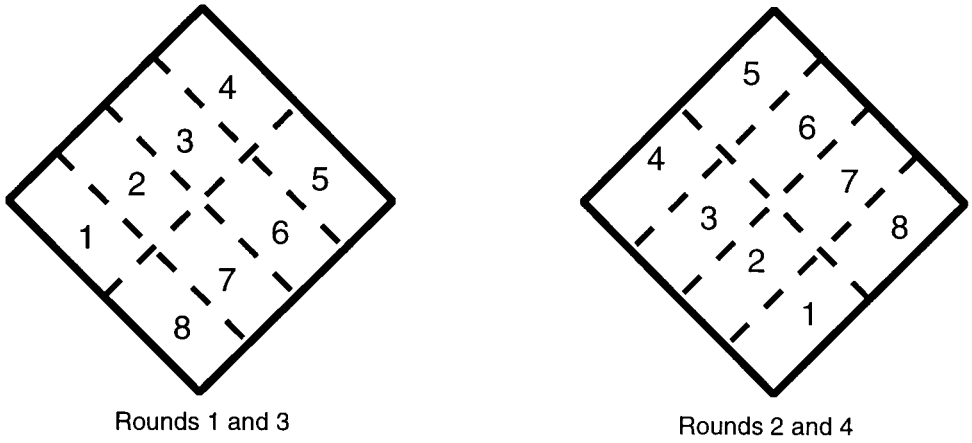

Figure 1

f. Bring in the mortar that has been forced out onto the tops of the molds with a trowel and smooth off the cubes by drawing the flat side of the trowel (with the leading edge slightly raised) once across the top of each cube at right angles to the length of the mold. Then, for the purpose of leveling the mortar and making the mortar that protrudes above the top of the mold of more uniform thickness, draw the flat trailing edge of the trowel (with leading edge slightly raised) once lightly along the length of the mold. Cut off the mortar to a plane surface flush with the top of the mold by drawing the straight edge of the trowel (held nearly perpendicular to the mold) with a sawing motion over the length of the mold.

g. When fabricating fluid mixes, steps e. and f. need not be followed. Instead, the cube mold is filled with mortar and cut off to a plane surface with a sawing motion over the length of the mold.

h. Immediately after molding, place cover plate on top of the mold, cover the sample with wet burlap, and place it in a plastic sack out of direct sunlight. Allow the sample to set undisturbed, away from vibration, for a minimum of four hours before moving. Deliver the sample to the regional or FOSSC Materials Laboratory within 24 hours. Once received in the lab, specimens are immediately placed in a moist curing room, all molded test specimens are kept on the base plates from 20 to 24 hours with their upper surfaces exposed to the moist air but protected from dripping water. If the specimens are removed from the molds before 24 hours, keep them on the shelves of the moist curing room until they are 24 hours old; and then immerse the specimens (except those for the 24-hour test) in saturated lime water in storage tanks made of noncorroding materials. Keep the storage water clean by changing as required.

i. Curing test specimens of material other than hydraulic cement shall be in conformance with the manufacturer’s recommendations.

Performance Exam Checklist

Field Method of Fabrication of 50-mm (2-in.) Cube Specimens for Compressive Strength Testing of Grouts and Mortars

Participant Name _____ Exam Date _____

Procedure Element	Yes	No
1. Three cubes made for each time period of test?	_____	_____
2. All joints (mold halves, mold to base plate) sealed with light cup grease?	_____	_____
3. Adequate coating of release agent applied to interior surfaces of the mold?	_____	_____
4. Grout or mortar mixed according to manufacturer's instructions?	_____	_____
5. Molding began within 2-1/2 minutes from completion of mixing?	_____	_____
6. Molding performed in two lifts? (not necessary if mix is fluid)	_____	_____
7. Lifts tamped 32 times, made up of 4 rounds of 8, each perpendicular to the other?	_____	_____
8. For second layer, mortar forced out of the mold brought back in before each round?	_____	_____
9. Mix extends slightly above the mold at the completion of tamping?	_____	_____
10. Mortar smoothed by drawing flat side of trowel across each cube at right angles?	_____	_____
11. Mortar leveled by drawing the flat side of trowel lightly along the length of mold?	_____	_____
12. Mortar cut off flush with mold with edge of trowel using sawing motion?	_____	_____

Procedure Element	Yes	No
13. Immediately after molding, sample covered with burlap and place in plastic sack?	_____	_____
14. Left undisturbed for at least 4 hours?	_____	_____
15. Delivered to the testing laboratory within 24 hours?	_____	_____

Comments: First attempt: Pass ☐ Fail ☐ Second attempt: Pass ☐ Fail ☐

_____

_____

_____

_____

_____

_____

_____

_____

_____

_____

Signature of Examiner _____

WSDOT Test Method No. 914

Practice for Sampling of Geotextiles for Testing

1. SCOPE

   a. This practice covers a procedure for use in the division of shipments of geotextiles into lots and the sampling of lots for testing.

2. DEFINITIONS

   a. Geotextile — Any permeable textile used with foundation, soil, rock, earth, or any other geotechnical material, as an integral part of a manmade product, structure, or system.

   b. Lot — All geotextile rolls within a consignment (i.e., all rolls sent to the project site) which were manufactured at the same manufacturing plant having the same product name and specifications, style, or physical characteristics of a particular geotextile product.

   c. Sample Lot — From one or more geotextile rolls taken at random to represent an acceptance sampling lot and used as a source of laboratory samples.

   d. Specimen — A specific portion of a material or laboratory sample upon which a test is performed or which is taken for that purpose.

   e. Production Unit — As referred to in this practice, it shall be considered to be synonymous with the geotextile roll as shipped by the manufacturer. Two or more geotextile rolls joined together by sewn seams shall be considered as separate rolls.

   f. Minimum Average Roll Value — The test results of any sampled roll in a lot shall meet or exceed the minimum values specified.

3. SUMMARY OF PRACTICE

   a. Instructions are given within this practice for dividing shipments or consignments of geotextiles into lots and for the determination of the number of production units in a lot sample.

4. SIGNIFICANCE AND USE

   a. This sampling procedure will provide a representation of the lot which is adequate to establish minimum average roll values as defined by this practice.

5. PROCEDURE

   a. Division into lots — Divide the shipment or consignment into lots as defined by 2.b. above.

   b. Determination of lot sample size.

      (1) Take geotextile rolls for the lot sample. Consider the geotextile roll to be the primary sampling units.

      (2) Select at random the number of geotextile rolls from each lot for the lot sample corresponding to the total number of units in the lot, as shown in Table 1. If the lot as defined in this practice contains only a portion of a geotextile roll, the lot shall be considered to contain one production unit for the purpose of sampling.

c. Laboratory sample selection.

(1) Obtain a laboratory sample from each geotextile roll in the lot sample. The minimum laboratory sample size shall be 1.37 m (1.50 yd.) by the full width of the geotextile roll. The laboratory sample must also contain a minimum area of 5.0 m^2 (6.0 $yd.^2$) of geotextile.

(2) The laboratory sample should not be taken from the outer wrap of the roll nor the inner wrap of the core (i.e., do not take the sample from the geotextile at the very ends of the roll).

Table 1

Number of Geotextile Rolls to be Selected as Lot Sample

Number of Rolls in Lot	Number of Rolls to be Selected for Lot Sample
1 to 24	1
25 to 49	2
50 to 99	3
100 to 125	5
125 to 216	6
217 to 343	7
344 to 512	8
513 to 729	9
730 to 1,000	10

6. SAMPLE SUBMITTAL

a. All geotextile samples submitted to the FOSSC Material Laboratory are to be prepared and shipped as follows:

Woven Geotextiles — Roll sample around a 6-in cardboard mailing tube and wrap to protect sample from shipping damage and ultraviolet light (UV) exposure.

Nonwoven Geotextiles — Fold sample to a minimum 2 ft x 2 ft (0.6 m x 0.6 m) square, or roll as for woven geotextile. Wrap or box sample for shipment to protect from shipping damage and ultraviolet (UV) light exposure.

b. If sample is for Acceptance of Lots used on project, the following information must be submitted with the sample:

(1) Manufacturer’s name and current address.

(2) Full product name.

(3) Geotextile roll number(s).

(4) Proposed geotextile use(s).

(5) Certified test results.

Testing by the FOSSC Materials Laboratory will not begin until all of the required information is received.

Performance Exam Checklist

Practice for Sampling Geotextiles for Testing WSDOT T 914

Participant Name _____ Exam Date _____

Procedure Element	Yes	No
1. Sampling	_____	_____
a. Shipment or consignment divided into lots.	_____	_____
b. Determine the number of rolls in the shipment or consignment to be sampled from Table 1.	_____	_____
c. Rolls to be sampled selected at random.	_____	_____
d. Samples are a minimum 1.5 yd. (1.37 m) long by the full width of the roll and a minimum of 6 sy (5 square meters).	_____	_____
e. Sample does not include outer wrap or inner wrap of the roll.	_____	_____
2. Shipment Preparation	_____	_____
a. Woven geotextiles must be rolled and shall not be folded.	_____	_____
b. Non-woven geotextiles should be rolled or folded but not folded to less than a minimum of 2 feet square.	_____	_____
c. Wrap the sample (or box if folded) to protect from ultra-violet light exposure.	_____	_____
3. Sample Transmittal Inclusions	_____	_____
a. Manufacturers name and current address (usually on the mfg. Cert).	_____	_____
b. Full product name (Style 4551, 180N, Geotex 801).	_____	_____
c. Geotextile roll number.	_____	_____
d. Proposed use(s), include survivability and class if appropriate.	_____	_____
e. Certified test results, must include UV stability after 500 hours.	_____	_____
f. Lot number assigned (can be the bill of lading number).	_____	_____

Comments: First attempt: Pass ☐ Fail ☐ Second attempt: Pass ☐ Fail ☐

_____

_____

_____

_____

_____

_____

_____

_____

_____

_____

Signature of Examiner _____

WSDOT Test Method for ASTM C 939[1]

Flow of Grout for Preplaced-Aggregate Concrete (Flow Cone Method)

This standard is issued under the fixed designation C 939; the number immediately following the designation indicates the year of original adoption or, in the case of revision, the year of last revision. A number in parentheses indicates the year of last reapproval. A superscript epsilon (e) indicates an editorial change since the last revision or reapproval. *This specification has been approved for use by agencies of the Department of Defense.*

1. SCOPE

   1.1 This test method covers a procedure, used both in the laboratory and in the field, for determining the time of efflux of a specified volume of fluid hydraulic cement grout through a standardized flow cone and used for preplaced-aggregate (PA) concrete; however, the test method may also be used for other fluid grouts.

   1.2 It is for use with neat grout and with grouts containing fine aggregate all passing a No. 8 (2.36-mm) sieve.

   1.3 This test method is intended for use with grout having an efflux time of 35 s or less.

   1.4 When efflux time exceeds 35 s, flowability is better determined by flow table, found in Test Method C 109, using 5 drops in 3 s.

   1.5 The values stated in SI units are to be regarded as the standard.

   1.6 *This standard does not purport to address all of the safety concerns, if any, associated with its use. It is the responsibility of the user of this standard to establish appropriate safety and health practices and determine the applicability of regulatory limitations prior to use.*

2. REFERENCED DOCUMENTS

   2.1 *ASTM Standards:*

C 109/C109M	Test Method for Compressive Strength of Hydraulic Cement Mortars (Using 2-in. or 50-mm Cube Specimens)
C 938	Practice for Proportioning Grout Mixtures for Preplaced-Aggregate Concrete

3. SUMMARY OF TEST METHOD

   3.1 The time of efflux of a specified volume of grout from a standardized flow cone is measured.

4. SIGNIFICANCE AND USE

   4.1 This test method is applicable to the determination of the fluidity of various fluid grout mixtures.

5. INTERFERENCES

   5.1 The presence of solid particles retained on the 2.36-mm (No. 8) sieve or lumps of unmixed material in the grout may cause the grout to flow unevenly through the discharge tube of the flow cone or stop the flow completely. Uneven flow will result in slower transit of the grout, thereby indicating a false consistency.

[1]This Test Method is based on ASTM C 939-97.

6. APPARATUS

6.1 *Flow Con*e, with dimensions as shown in Figure 1. The discharge tube shall be stainless steel. The body can be stainless steel, cast aluminum, or other essentially noncorroding metal.

Note 1: Cones with high-density polyethylene bodies are acceptable for field use in situations where precision as described in this test method is not required.

6.2 *Receiving Containe*r, capacity 2000 mL, minimum.

6.3 *Ring Stand* or other device, capable of supporting the flow cone in a vertical, steady position over the receiving container.

6.4 *Leve*l, carpenter's or similar.

6.5 *Stop Watc*h, least reading of not more than 0.2 s.

6.6 *Grout Mixe*r, conforming to Practice C 938.

7. TEST SAMPLE

7.1 The grout test sample shall be in excess of 1725 mL and shall be representative of the grout in the mixer.

7.2 When sampling and testing is being done for the purpose of proportioning or comparing mixes or for qualifying materials, the temperature of the dry materials and mixing water shall be such that the temperature of the freshly mixed grout is 73.4 6 3°F (23 6 1.7°C), unless otherwise specified.

8. CALIBRATION OF APPARATUS

8.1 Mount the flow cone firmly in such a manner that it is free of vibration. Level the top to assure verticality. Close the outlet of the discharge tube with a finger or a stopper. Introduce 1725 6 5 mL of water into the cone. Adjust the point gage to indicate the level of the water surface. Then allow the water to drain.

8.2 Before first use of the flow cone with grout and periodically thereafter, check the accuracy of the cone by filling it with water as described in 8.1. After checking or adjusting the point gage, start the stop watch and simultaneously remove the finger. Stop the watch at the first break in the continuous flow of water. The time indicated by the stop watch is the time of efflux of water. If this time is 8.0 6 0.2 s, the cone may be used for determining the time of efflux of grout.

9. PROCEDURE

9.1 Moisten the inside of the flow cone by filling the cone with water and, 1 min before introducing the grout sample, allow the water to drain from the cone. Close the outlet of the discharge tube with a finger or a stopper. Introduce the grout into the cone until the grout surface rises to contact the point gage, start the stop watch, and simultaneously remove the finger or stopper. Stop the watch at the first break in the continuous flow of grout from the discharge tube, then look into the top of the cone; if the grout has passed sufficiently, such that light is visible through the discharge tube, the time indicated by the stop watch is the time of efflux of the grout. If light is not visible through the discharge tube, then the use of the flow cone is not applicable for grout of this consistency. At least two tests having times of efflux within 1.8 s of their average shall be made for each grout mixture.

9.2 The test for time of efflux shall be made within 1 min of drawing of the grout from the mixer or transmission line. When grout is being placed over a significant period of time, the time of efflux may be determined at selected intervals to demonstrate that the consistency is suitable for the work.

10. REPORT

10.1 Report the following information:

10.1.1 Identification of sample,

10.1.2 Identification of materials in the sample, the proportions, and whether laboratory-prepared or taken from the field production mix,

10.1.3 Average time of efflux to nearest 0.2 s and time interval from completion of mixing at which the test was made, and

Note 2: Other means of indicating grout level may be used as long as accurate indication of grout level on volume is obtained.

10.1.4 Temperature, ambient and of the sample at the time of test.

11. PRECISION AND BIAS

11.1 *Precisio*n — The following within-laboratory, multiple-operator precision applies. The single laboratory standard deviation has been found to be 0.88 s. Therefore, results from two properly conducted tests on the same material should not differ by more than 2.49 s.

11.2 *Bia*s — No statement on bias can be prepared because there are no standard reference materials.

12. KEYWORDS

12.1 flow cone; grout; preplaced—aggregate concrete; time of efflux

Performance Exam Checklist

Flow of Grout for Preplaced-Aggregate Concrete (Flow Cone Method)

Procedure Element	Yes	No
1. Is the grout that is being tested a “fluid grout?”	_____	_____
2. Will the grout pass through a No. 8 (2.36 mm) sieve?	_____	_____
3. Is the cone set level and vibration free?	_____	_____
4. Is the grout test sample in excess of 1725 ± 5 mL and representative of the grout being produced?	_____	_____
5. Is the grout being produced at the specified temperature (73.4 ± 3 F)?	_____	_____
6. Does the tester have a verified stopwatch capable measuring to a time of 0.2 sec.?	_____	_____
7. Was the water calibration performed prior to use and is there a record of the previous calibrations for this cone?	_____	_____
8. Was adjustment of the level indicator required?	_____	_____
Note: The calibration with water of a volume of 1725 mL ± 5mL is to be 8 seconds ± 0.2 seconds to be considered valid for acceptance.	_____	_____
9. Was the cone filled with water a minute prior to introducing grout?	_____	_____
10. Water drained and cone outlet closed with a stopper/finger then grout introduced into the cone until the grout surface rises to contact the point gauge?	_____	_____
11. Stopwatch started as stopper/finger is removed and then stopped and then stopped at the first break in continuos flow is observed?	_____	_____
12. Immediately observe to see if discharge tube is clear and light is visible through it.	_____	_____

Procedure Element	**Yes**	**No**
13. Repeat procedure and determine if the second observed flow rate is within ± 5% or less from the average of the two flow rates.	_____	_____
14. Record the average time of efflux to the nearest 0.2 seconds	_____	_____

Comments: First attempt: Pass ☐ Fail ☐ Second attempt: Pass ☐ Fail ☐

_____

_____

_____

_____

_____

_____

_____

_____

_____

_____

Signature of Examiner _____

WSDOT FOP for ASTM D 1186[1]

Nondestructive Measurement of Thickness of Nonmagnetic Coatings on a Ferrous Base

1. SCOPE

   a. This test method is intended for the nondestructive measurement of dry film thickness of nonmagnetic coatings applied over a ferrous base material using the two available testing instruments. These instruments are based on magnetic measuring principles only. Commonly referred to as “Mil” test gage.

   b. One works on the principle of a calibrated spring that determines the force required to pull the magnet away from a ferrous base coated with a nonmagnetic film, see Test Method A. This gage is commonly referred to as a “Banana” gage. The other type of instrument utilizes an electro magnet, see Test Method B.

   c. These instruments are used for testing paint, zinc galvanizing, tape coated pipe and other material coatings that require thickness verification.

   d. The standard does not purport to address all of the safety problems, if any, associated with its use. It is the responsibility of the user of this standard to establish appropriate safety and health practices and determine the applicability of regulatory limitations prior to use.

2. REFERENCE DOCUMENTS:

   ASTM D 1186

   ASTM A 123 (AASHTO M 111)

   ASTM A 153 (AASHTO M 232)

Test Method A — Magnetic Pull-off Gages

3. SUMMARY OF TEST METHOD

   a. Instruments complying with this test method measure thickness by using a spring calibrated to determine the force required to pull a permanent magnet from a ferrous base coated with a nonmagnetic film. One type of these gages is commonly referred to as a “Banana” gage

   b. The attractive force of the magnet to the substrate varies inversely with the thickness of the applied film. The spring tension required to overcome the attraction of the magnet to the substrate is shown on the instrument scale as the distance (in mils or micrometers) between the magnet and the substrate.

4. APPARATUS

   a. Pull-off Gage (Banana Gage) — Mikrotest Model 111 or equivalent

   b. Nonmagnetic Thickness Shims — Shims with assigned thickness values

[1]This FOP is based on AASHTO T 2-91 (1996)

5. CALIBRATION OF APPARATUS

a. Calibrate the instrument in an area free of stray magnetic fields, such as power lines, generators, or welding equipment. There shall be no vibration apparent on the test piece when the instrument is calibrated.

b. Use a bare section of the substrate after the specified surface preparation has been accomplished. If an uncoated section of the substrate is not available, uncoated test panels similar to the type on which the specified surface preparation has been performed may be used.

c. Select calibration shims in the expected thickness range to be measured. For example, if a coating is approximately 3 mils (75 mm) in thickness, calibrate the instrument at 3 mils. Then check the calibration, using shims of both a lesser and greater thickness, to determine the thickness range over which the instrument is calibrated.

d. Lay a calibrated shim on the bare, uncoated substrate and bring the magnet in direct contact with the shim. Place the gage in the right hand, carefully place the probe on the calibrated shim, rest the base of the instrument on the uncoated substrate. Hold the shim in contact with the substrate so it will not flex during calibration. Rotate the scale wheel counterclockwise slowly with the index finger or thumb until the magnet probe comes in contact with the calibrated shim. Reverse the rotation (counterclockwise) slowly until the yellow indicator is visible and click is heard. Read the coating thickness from the dial-type scale. The reading should agree with the shim thickness, if not consult the manufacturer's calibration instructions.

6. PROCEDURE

a. Use the instrument only after it has been calibrated, in accordance with Section 5.

b. Inspect the magnet tip and surface to be measured to assure that they are clean. Adherent magnetic filings or other surface contaminates will effect gage readings.

c. Place the gage in the right hand, carefully place the probe on the test area, rest the base on the test part, if possible. Rotate the scale wheel counterclockwise slowly with the index finger or thumb until the magnet probe comes in contact with the test area. Reverse the rotation (counter clockwise) slowly until the yellow indicator is visible and click is heard. Read the coating thickness from the dial-type scale. If the thickness readings are found to outside the calibration range established in 5, repeat the calibration procedure in the appropriate range.

d. Take a sufficient number of readings to characterize the surface being tested. For field measurements a minimum of five determinations at random of every 100 ft.^{2} (10 m^2) of surface area. Each of the five determination is the mean of three separate gage readings within the area of ½ in. (12 mm) diameter circle. A minimum of three test specimens will be tested.

e. Make measurements at least 1 in. (25 mm) away from any edge or corner of the specimen.

Test Method B — Magnetic Flux Gages

7. SUMMARY OF TEST METHOD

   a. After calibrating the instrument using shims of known thickness and either a bare part of the metal object or metal of the same kind, the instrument is probe is placed in contact with the coated steel metal.

   b. It should be recognized that accuracy of the measurements may be influenced when made closer than 1 in. (25 mm) to an edge or 3 in. (75 mm) to another mass of metal. The edge or mass of steel may cause flux leakage from the instrument, thus distorting the readings.

8. APPARATUS

   a. Positector 6000.

   b. Nonmagnetic Thickness Shims — Shims with assigned thickness values.

9. CALIBRATION OF APPARATUS

   a. Follow the steps outline in 5a. through 5c.

   b. Hold the instrument contact or probe handle firmly on the surface and perpendicular to the measuring plane during calibration and use. Consult manufacturer's written instructions for the specific adjustment of the instrument.

10. PROCEDURE

   a. Follow the steps outline in 6a. through 6b.

   b. Remove the probe's protective cover, place the probe on the test surface and read the digital indicator. Using this gage on other than flat surfaces requires special attention. Rocking motion of the gage causes inaccurate readings.

   c. Follow the steps outlined in 6d. through 6e.

11. COATING REQUIREMENTS

AASHTO M 111 (ASTM A 123)

Table 1 — Minimum Coating Thickness Grade By Steel Category ,
Steel Thickness Range (Measured), in. (mm)

Steel Category	Under 1/16 (1.6)	1/16 (1.6) to under 1/8 (3.2)	1/8 (3.2) to 3/16 (4.8)	3/16 (4.8) to under 1/4 (6.4)	1/4 (6.4) or Over
Structural Shapes	45	65	85	85	100
Strip	45	65	75	85	100
Pipe	------	------	75	75	75
Wire	45	45	65	65	85

Table 2 — Coating Thickness Grade Conversion

Thickness Grade	mils	oz/ft.^{2}	mm	g/m^2
35	1.5	0.8	35	250
45	1.9	1.1	45	320
55	2.1	1.2	55	390
65	2.5	1.5	65	460
75	2.9	1.7	75	515
85	3.4	2.0	85	605
100	3.9	2.3	100	710

AASHTO M 232 (ASTM A 153)

Table 1 — Weight of Zinc Coating for Various Classes of Material

Note 1 — Length of the piece, stated in Classes B-1, B-2, and B-3, refers to the overall dimension and not to its developed length

Note 2 — Based upon mathematical calculations, 1 oz/ft.^{2} of zinc surface corresponds to an average coating thickness of 1.7 mils

Class of Material	Minimum Weight of Zinc Coating, oz/ft.^{2} of Surface[A]	
	Average of Specimens Tested[B]	**Any Individual Specimen**
Class A — Castings — Malleable Iron, Steel	2.00	1.80
Class B — Rolled, pressed, and forged articles (except those which would be included under Class C and D)		
B-1 3/16 in. and over in thickness and over 15 in. in length	2.00	1.80
B-2 under 3/16 in. in thickness and over 15 in. in length	1.50	1.25
B-3 any thickness and 15 in. and under in length	1.30	1.10
Class C — Fasteners over 3/8 in. in diameter and similar articles. Washers 3/16 in. and 1/4 in. in thickness	1.25	1.00
Class D — Fasteners 3/8 in. and under in diameter, rivets, nails, and similar articles. Washers under 3/16 in. in thickness	1.00	0.85

[A] In the case of long pieces, such as anchor rods and similar articles over 5 ft. (1.5 m) in length, the weight of coating shall be determined at each end and the middle of the article. In no case shall individual measurements be below the minimum shown in the "Any Individual Specimen" column.

[B] The number of specimens to be tested per order shall be a minimum of 3 specimens.

12. REPORTS

a. Report the following information: the instrument serial number, range and all field readings.

See attached form

b. Material represented by the test specimens when tested under this method and found to meet the specified minimum coating thickness may be accepted. Any specimens which does not meet the minimum coating thickness will not be retested using this test method. Samples of the material will be submitted to either the Eastern Region Consolidated Materials Laboratory or the OSC Material laboratory for referee testing in accordance with AASHTO T 65.

Field Report of Thickness of Nonmagnetic Coating on a Ferrous Base

D 1186

Contract _____ Bid Item No _____ Item _____

Specimen No. _____

Specification: _____ Coating Thickness Required _____ (mils),(mm)

Surface area of test specimen _____ m^2 (ft^2) Test represents _____

Instrument Serial No. _____ Calibration Date _____

Tested by: _____ Date: ___/___/20___

Reading No.	Test Location	Reading	Avg Readings
1			
2			
3			
4			
5			
6			
7			
8			
9			
10			
11			
12			
13			
14			
15			
16			
17			
18			
19			
20			
21			
22			
23			
24			
25			
26			
27			
28			
29			
30			
Average			

Performance Exam Checklist

Nondestructive Measurement of Thickness of Nonmagnetic Coatings on a Ferrous Base

Technician_____

Date_____

	Test	Retest
1. Instrument calibrated in accordance with the manufacturer's instructions before use employing a suitable thickness standard?	_____	_____
2. Several readings taken and recorded taking into account edge and curvature effects?	_____	_____
3. The average thickness converted to oz. ft^2 (g/m^2) using appropriate conversion factor?	_____	_____

Comments: First attempt: Pass ☐ Fail ☐ Second attempt: Pass ☐ Fail ☐

_____

_____

_____

_____

_____

_____

_____

_____

_____

_____

Page

10-1 General 10-1
10-1.1 Introduction 10-1
10-1.2 Requirements for Notes 10-1
10-1.3 Source Documents 10-2

10-2 Measurement of Items of Work 10-2
10-2.1 General 10-2
10-2.1A Introduction 10-2
10-2.1B Quantity Details 10-2
10-2.1C Item Quantity Ticket 10-2
10-2.1D Conversion Factors 10-3
10-2.2 Items Measured by Weight 10-4
10-2.2A General Instructions 10-4
10-2.2B Weighing of Small Quantities 10-4
10-2.2C Weighing Equipment 10-5
10-2.3 Items Measured by Volume 10-6
10-2.3A Truck Measure 10-6
10-2.3B Cross-Sections 10-7
10-2.3C Neat Line Measurement 10-7
10-2.4 Items Measured by Hour/Day 10-7
10-2.5 Items Measured by Lump Sum 10-7
10-2.6 Items Measured by Other Units 10-8
10-2.6A Linear Measurement 10-8
10-2.6B Area Measurement 10-8
10-2.6C Per Each Measurement 10-8
10-2.7 Items Bid at “No Charge” 10-8

10-3 Final Records for Projects Constructed by Contract 10-8
10-3.1 Records 10-8
10-3.1A Permanent Records 10-8
10-3.1B Temporary Final Records 10-9
10-3.2 Contracts 10-9
10-3.3 Change Orders 10-9
10-3.4 Contract Estimate Payments 10-9
10-3.5 Final Record Book No. 1 10-9
10-3.6 Diary Records 10-10
10-3.6A Project Engineer’s Diary 10-10
10-3.6B Inspector’s Daily Report 10-10

Page

10-3.7 Record of Accidents and Traffic Control 10-11
10-3.7A Record of Accidents and Traffic Surveillance 10-11
10-3.7B Contractor's Daily Report of Traffic Control 10-11
10-3.8 Pile Driving Records 10-11
10-3.9 Post Tensioning Records 10-11
10-3.10 Miscellaneous Records 10-11
10-3.11 As-Built Plans 10-11
10-3.12 Final Record Field Notebooks 10-12
10-3.13 Electronically Produced Documents 10-13
10-3.14 Photographs 10-13
10-3.15 Pre-Estimate Reports 10-13
10-3.16 Estimate Reports 10-14

10-4 Project Ledger System 10-14
10-4.1 General 10-14
10-4.2 Source Documents 10-14
10-4.3 Source Document Filing Systems 10-15

10-5 Region Project Documentation Reviews 10-15
10-5.1 General 10-15
10-5.2 Review Procedures for Final Estimates and Final Records 10-16

P65:DP/CM

10-1 General

10-1.1 Introduction

This chapter is intended to provide reference and guidance for the project office's use in the keeping of Construction Contract Records. While there may be differing needs or circumstances that must also be met within each project office, it is intended that this guidance be used to help identify the minimum requirements that are necessary in order to establish an adequate method of record keeping. These minimum requirements also help to establish a basic level of uniformity among all project offices statewide. This can help to facilitate the review of records by others and promotes greater efficiency when engineering personnel are transferred or reassigned between different projects or even different project offices. If a clear method of record keeping can be identified prior to the beginning of work, then original field notes and records can be easily prepared and maintained as the work progresses. This will also help to reduce the effort required to produce the final contract records upon completion of the project.

Successful contract administration requires that measurements and calculations of contract quantities are accurate, that records of such quantities are complete, that records are sufficiently detailed in a manner that will withstand an audit, and that records of all other activities pertaining to the contract contain sufficient details which are clear enough to be read and understood by anyone unfamiliar with the project. The Project Engineer is responsible to ensure that these accurate and complete records are maintained for all construction project work. If questions or assistance is needed, the statewide Documentation Engineer as well as the Regional Documentation Engineer are both available as resources for the Construction Project Office's use.

It is recommended that original field notes be kept in a form that can be filed and retained as basic documentation. Field notes taken on scratch paper and then passed to the office should not be considered as acceptable documentation. Transcription of field notes to final record form should be avoided due to the possibilities of error and the unnecessary cost of duplication.

Region personnel should ensure that notes are made correctly and are complete with all pertinent information. Sample notes have been included with this chapter and are intended as a guide or reference in preparing final record notes.

Facsimile machines and electronic mail are normal business practices in most state and private offices. It is acceptable to take action on these types of correspondence; however, in order to properly document and follow the conditions noted in the contract, facsimile and electronic mail should be followed up by exchanging or mailing original copies of the documents. This is especially true for any item that requires a commitment by either the Contractor or the Washington State Department of Transportation (WSDOT). Follow up mail copies are required for all issues that require a signature.

10-1.2 Requirements for Notes

Documentation of contract items that are not specifically covered by the sample field notes presented in this chapter can, in most instances, be created using the examples shown for similar items as a guide. The following notations should be carefully observed for correct procedure:

1. Each set of notes should contain the date when they were made and the initials of the persons making them.

2. Each set of notes, except staking notes, should contain the date when the phases of work are accomplished, the initials of the persons who compute and check the quantities noted, the dates when the quantities were computed, the dates when the computations were subsequently checked, the locations where the work was performed and the corresponding group number.

3. When field notes are used as the basic source document in supporting a payment to the Contractor, they must include the date and initials of the person making the entry into the project ledger, the person verifying the entry, and the six-digit entry number.

4. Each pay quantity identified in the field notes should be designated with the corresponding item number and item name listed in the contract.

5. It is recommended that the correct field book or loose leaf sheet always be used for the particular kind of work being staked or measured.

6. The degree of accuracy required for computing unit quantities should be consistent with standards established in Chapter 10-2.1B.

7. It is recommended that sets of field notes and field books be numbered and titled in order to prevent their loss and to aid in tracking payments and their supporting information.

10-1.3 Source Documents

Field notes are one of the many items that might be considered a Source Document. It is recommended that all field notes, base line notes, centerline notes, and grade books be recorded in bound books. If loose-leaf books are to be used, care must be exercised to prevent lost pages.

Notes should be recorded in a manner that is neat, clear, uncrowded, and in sufficient detail so as to be easily understood.

Original entries later determined to be in error must not be obliterated by erasing, application of correction fluid, or taped over. Instead a line should be cleanly drawn through the mistaken entry and corrections entered directly above with the initials of the person making the change. This is very important as erasures will destroy the legal standing of notes. When revisions require abandonment of a considerable portion of notes, they shall be crossed out and a cross-reference made of the book and page number where the revised notes may be found.

Each Final Records book should be labeled and contain a title page using Forms 422-009 and 422-009B. Each book is to be numbered and a table of contents included on the first page following each book's title sheet. It is essential that original field notes and documents be carefully organized, kept, recorded, and maintained in safe filing facilities during the active stage of a project. These documents should be transferred to safe, adequate, and recoverable storage after the contract is completed. At all times, when not in use, all source documents, reports, survey notes, etc., should be kept in fire resistant files where possible. Additional information on source documents can also be found in Section 10-4.2 of this chapter.

10-2 Measurement of Items of Work

10-2.1 General

10-2.1A Introduction

It is essential that the Project Engineer ensure proper controls are exercised when measuring items of work. The Project Engineer should also ensure that payments are not made for any item that cannot be substantiated by the project records, regardless of the work's stage of completion. Items that are paid on the basis of weight or truck volume require measurement of the quantities involved, evidence for receipt of the materials, and documentation for both of these operations through the use of item quantity tickets or other delivery records.

10-2.1B Quantity Details

The number of significant decimal places to which quantities should be measured and/or computed varies with the value or unit bid price of the respective items involved. Unless advised otherwise, the Project Engineer should use the following guidelines.

Bid Price	Significant Decimal Per Unit
Less than $10 per unit	1.
From $10 to $100 per unit	0.1
Over $100 per unit	0.01

Quite often, good practice would dictate that the various parts of a particular quantity be calculated to a higher significant decimal place or in some other unit, a unit other than that used for payment, and then be converted to the payment unit in the summation. Good judgment should be used in selecting when to actually apply rounding to the quantity. In general, it is considered proper to apply rounding at the first summation of each isolated part. For example, at the summation of a day's item quantity tickets the quantity to be recorded should be rounded to the proper significant decimal place and the rounded quantity recorded into the project ledger.

10-2.1C Item Quantity Ticket

A three part Item Quantity Ticket (IQT), Form 422-021, has been developed for use as a tool in documenting the many items which are paid for on the basis of quantities of materials or other bid item services that are received at the project site. An example of an IQT can be found in Figure 10-1. When using either the State provided IQT or Contractor provided IQT, the Project Engineer should ensure that the items noted below, identified as minimum required information for documenting receipt of materials and for supporting payment of those materials, are completely filled out on each IQT utilized. Other or additional information may be added to the item quantity tickets at the option of the Project Office. However, this additional information would be intended only as a convenience for project staff in their work monitoring material use. The Project Engineer should also ensure that the carrier transporting each load of material or the person responsible for the particular contract bid item or service is issued an item quantity ticket for each delivery of the material or service to the jobsite.

In lieu of using Form 422-021, tickets may also be furnished by the Contractor, commercial scale companies, or suppliers at commercial plants or material sources. These tickets are sometimes electronically produced. In some instances these tickets can be programmed in advance of the hauling to accurately print, on each ticket, the minimum

required information as noted below. While this can be done by the contractor in an effort to cooperate with the Project Office towards successful completion of the project, the Project Engineer must ultimately ensure that the minimum required information is accurately noted on each ticket.

The following minimum required information is to be recorded on each State-provided IQT, Contractor-provided IQT, or IQT's produced by fully automated scales:

- Contract Number
- Date
- Contract Unit Bid Item No.
- Initials of person accepting the item on the jobsite
- Unit of measure
- Identification of hauling vehicle, as appropriate
- Record of the gross, tare, and net weights. If the scale has a tare beam so that the net weight can be read directly or when using batch plants with direct reading scales, only the net weight need be recorded. If the unit of measurement is cubic meters, cubic yards, hours, etc. only the net amount need be recorded.

In addition to the minimum required information, there are a number of other items that could also be included on the item quantity tickets. While this information is helpful to others who may also be using these same tickets for monitoring materials, materials placement, or other issues, this additional information is not required for documentation supporting payment for materials received. Placing this information on item quantity tickets can be helpful, but is solely at the option of the Project Office. Some of these optional items may include:

- The Group, Station, Mile, or Kilometer of material placement or use can be noted to help identify material's location on the jobsite. It can also be used to help identify group payment.
- Contractor/Subcontractor completing the work represented by the ticket noted.
- If a ticket is issued for an overweight load, the legal gross weight for the hauling conveyance, corrections or adjustments to the gross and net quantities, or any other pertinent information, may be recorded in the remarks section.
- Legal gross weight for the hauling vehicle.
- Cumulative totals for the day.
- Pit number identifying the source of the material.
- Time weighed and initials of the person issuing the ticket.
- Time materials or services are received on the jobsite.
- Description of the material that matches the unit bid item name.
- Ticket serial number, etc.

A representative of WSDOT should be assigned as a receiver at the delivery site or at the site where the item is to be placed. The receiver should collect the tickets from the carrier upon delivery of the ticketed material, record any required or additional information on the ticket as necessary, and retain the original copy for payment. When using Contractor or State provided multiple part tickets, the Contractor's representative should be provided the copy marked "Contractor" either upon delivery or at the end of each day's operation.

For materials or services that are not paid for by weight, the receiver should complete the ticket at the point of delivery. The appropriate items required to identify the material or bid item service, the quantity, and its placement should then be filled in.

Payment and documentation of materials received should be based on the original tickets received at the project site. Any tickets that may be identified as missing should be reconciled immediately with the Contractor so they will not be in contention for payment at a later date. Unless the Project Engineer decides otherwise, when using the State provided item quantity tickets it is not necessary to retain the goldenrod or "Book" copy. Once the Contractor has been provided with the green copy of the ticket marked "Contractor" and the white copy of the ticket marked "Original" has been reconciled and approved for payment, the goldenrod or "Book" copy may be discarded.

10-2.1D Conversion Factors

Conversion factors for liquid asphalt are found in Section 1-09.1 of the *Standard Specifications*. A conversion factor for aggregates can be found in Section 1-09.2(5) of the *Standard Specifications* for use when "minor or incidental" quantities are involved.

When it becomes necessary to use an unpublished conversion factor such as tons to cubic yards (tonnes to cubic meters) or vice versa for a contract pay item, the Project Engineer must perform adequate tests and retain supporting data establishing the conversion factor or new price quotation. A letter of agreement or change order for the conversion factor is needed.

10-2.2 Items Measured by Weight

10-2.2A General Instructions

All materials paid on the basis of weight are to be weighed in accordance with the provisions of the *Standard Specifications* by a representative of WSDOT, or at commercial scale operated by a commercial operator. If a commercial scale is utilized, a WSDOT representative will periodically observe and check the weighing operation on a nonscheduled basis, but not less than twice a week. The weigher, either WSDOT or commercial, will record the necessary weight and information on an Item Quantity Ticket in accordance with the instructions in Chapter 10-2.1C of this manual.

When platform scales are used, the tare weight of each truck is to be taken at least twice daily and recorded on a tare sheet, scaleperson's diary, or shown on the Scaleman's Daily Report Form 422-027. The tare weight is the weight of the truck without a load. When using a tare beam scale, the tare for each individual truck is to be set on the beam at the time of weighing, not the average tare weight for all trucks.

In accordance with Section 1-09.2(3) of the *Standard Specifications*, the operator will test the scales at least once daily. When commercial scales are used, the test methods and procedures are to be approved in advance by the Project Engineer. Several times each day the operator will make certain the scale balances and returns to zero when the load is removed. The results of scale testing, AM/PM tare weight, and balancing of the scale are to be recorded for each day's production on the Scaleman's Daily Report Form 422-027. These daily reports are required for each day's production. These requirements apply to state-provided weighers as well as contractor-provided commercial weighers.

For most materials, the loads and the tare weights will be weighed to the nearest 100 pounds (50 kilograms). Item Quantity Tickets will only be issued for weights up to the maximum legal amount for each hauling vehicle. Maximum legal gross vehicle weights are determined by either the individual vehicle's license, the maximum allowed on the haul route if on a public road, or by a current overlegal weight permit. If the gross load is over the legal limit, WSDOT's weighperson, the commercial weigher, or, if missed at the scales, the material receiver shall promptly advise the Contractor and/or supplier. The Contractor or supplier should be given the opportunity to unload the surplus material and then reweigh. If the Contractor elects not to decrease the load, the actual weight of the load will be recorded on the ticket. This weight will then be crossed out and the maximum gross legal weight shown in its place for use in determination of the pay weight. A weight ticket should not be issued for any material over the maximum gross legal weight for the hauling vehicle.

Occasionally a weight ticket showing an overlegal load will escape notice of both the weigher at the scales and the material receiver on the grade. Should this happen and the weight ticket is transferred to the project office for processing and payment along with other weight tickets within legal weight limitations, the project office will correct the white "Office" copy of the ticket, deducting the weight of the excess materials. This is in accordance with Section 1-09.2(6) of the *Standard Specifications*, which requires that payment not be made for material over the maximum gross legal weight for the hauling vehicle.

In the determination of quantities for materials produced from batch-type mixing plants, where individual components of each batch of materials are weighed before mixing, the batch weights will be acceptable for measurement and payment provided that a WSDOT representative is assigned to observe and check on the weighing operations and periodic checks are made and recorded in the checker's diary of the batch weights. This checker should also observe and periodically record the number of batches placed in each truck and shall issue Item Quantity Tickets for all truck loads dispatched.

When surfacing materials, gravel backfill, riprap, and other similar materials are involved on a project and it is reasonably certain that no diversion or substitution of materials can occur, the requirement for issuance of individual weight tickets for each truck load can be waived. However the procedure must be approved, by the Project Engineer, in advance of the hauling operation. The information normally required for the Item Quantity Tickets shall be recorded by the weighperson on a scale sheet and the receiver at the point of delivery shall keep a delivery record showing the truck number and delivery time for each load placed, plus any other pertinent information. The yield will be computed periodically on the basis of weight subtotals sent out by the weighperson at regular intervals during the day. At the end of each day's operation, the receiver will confirm the number of loads delivered with the scale sheet prepared by the weighperson. In cases of unexplainable discrepancies, the receiver's record shall prevail.

10-2.2B Weighing of Small Quantities

When materials are received intermittently throughout the day, and the quantities amount to less than 200 tons (tonnes) of untreated materials or 100 tons (tonnes) of treated materials per day, the Project Engineer may choose to receive the material on the basis of weights supplied by the Contractor or supplier. The Project Engineer should ensure that an Item Quantity Ticket is filled out completely and signed by the person who is the weigher of the material. A Scaleman's Daily report is not required for the weighing of these small quantities of materials. Under these conditions, the acceptance of the material will depend entirely

on the judgment of the receiver. The receiver of the material should observe the load to ensure the quantity of material shown on the weight ticket appears to be reasonable. The receiver should note this observation in the remarks section on the weight ticket supplied by the Contractor.

The Project Engineer should ensure that, when accumulating small quantities of materials over a period of days, the total quantity of material on a project to be accepted on the basis of weights supplied by the Contractor or supplier, does not exceed the maximum quantities for treated and untreated materials.

The specific materials acceptance requirements for receipt of Small Quantities of materials are further outlined in Chapter 9-5.2C of this manual.

10-2.2C Weighing Equipment

Scales for the weighing of natural, manufactured, or processed highway and bridge construction materials that are required to be proportioned or measured and paid for by weight, are to be furnished, erected, and maintained by the Contractor, or be permanently installed, certified, commercial scales. All weighing equipment must meet the specific requirements noted in Section 1-09.2 of the *Standard Specifications*.

10-2.2C(1) General Requirements of Weighing Equipment

Equipment for weighing highway and bridge construction materials must be accurate to within 0.50 percent of the correct weight throughout its range of use. Before a scale can be used at a new site it must be certified by the Washington State Department of Agriculture's Weights and Measures Section or tested by an agent of the scale's manufacturer with at least 10,000 lb. (4,500 kilograms). Once the scale has been set up and certified for use, the scale certification or scale test must be maintained current every 6 months throughout the life of the project. A copy of the current certification or test report must be attached to the scale or posted at the scale site and furnished to the Project Engineer for the project files. The current certification or test must be noted on the Scaleman's Daily Report, Form 422-027. If any question develops concerning accuracy and adjustment of the scales, the Contractor must have them checked and adjusted by a competent commercial scale testing service. The scale operator is required to inspect the scales at least once daily. All platforms, bunkers, knife edges, and any other mechanical moving parts must be free from accumulations of material which may cause binding and introduction of errors. Checks are to be made throughout each day to see that the scales are balanced and return to zero when no load is on them. These same checks are also required of commercial weighers.

10-2.2C(2) Specific Requirements for Batching Scales

The weighing equipment and the hopper are arranged so that the operator can conveniently add or remove material in the hopper and view beams or dials simultaneously. Weighing hoppers mounted on platform scales are to have the center of gravity directly over the center line of the platform.

The scales used for weighing Portland cement and asphalt cement should be separate from those for weighing other materials. This is primarily due to the timing requirements for introducing these materials into a mixing drum.

When proportioning scales are used for measurement for payment, a check of the proportioning scales by weighing a loaded truck of mixed material should be made at least daily to establish the reliability for determinations made for quantity of material received.

10-2.2C(3) Specific Requirements for Platform Scales

Platform scales are to be of sufficient size and capacity to weigh the entire hauling vehicle or combination of connected vehicles at one time. No part of the connected vehicles or combination is to be permitted off the platform at the time of weighing.

Every day that the scale is utilized, one of the following three methods of checking the scales must be used to determine if the scale is operating to within one-half of one percent of the true weight of the weighed load. The method used to make this determination, including the calculation and the results of the test performed, are to be recorded on the Scaleman's Daily Report Form 422-027. The requirement to complete and report this test also applies to commercial weighers.

The three methods identified for checking the scales are:

1. Weigh a loaded truck on another scale which has been inspected or certified, then reweigh the weight of the loaded truck on your scale.

2. Weigh your State vehicle on a separate certified scale and check your scale with it.

3. If one truck is used for an extended period of time, use it as a "tattle-tale" weight check. The tare weight of the truck should be established just after the scale has been tested by an agency or checked by methods (1) or (2). When the truck is originally weighed, check the amount of fuel and make the daily check when the amount of fuel is the same, and check to see that the truck is free of mud, etc. This procedure is best utilized during dry weather. When this procedure is used, the scales are also to be checked by methods (1) or (2) twice weekly.

Abrupt stops by locking and holding brakes, as well as large idling engines, will affect the accuracy of the scales. Occasional checks of the weight should be made with the brakes off and the motor stopped.

10-2.2C(4) Specific Requirements for Belt Conveyer Scales

Conveyor belt scales may also be used for untreated materials provided that both the method and/or device meets the general requirements noted for weighing equipment in Section 1-09.2 of the *Standard Specifications*. The belt must be kept clean during weighing operations in order to prevent any material clinging to the belt to also be weighed as it passes over the scales. Zero load tests are to be made occasionally to determine that the scales are properly adjusted. If a problem develops concerning accuracy of the scales, then these checks must be completed more frequently. The belt scales are equipped with recording odometers. Most of these record the weight of each load on the ticket to the nearest 0.1 ton (tonne) increments but the recording is a cumulative process on the totalizer. To obtain greater accuracy during the scale checks, the tonnage values should be obtained from readings taken of the sealed odometer at the beginning and end of each check period.

Three methods recognized for checking conveyor belt weighing are as follows:

1. Check five or more sequential hauling unit payloads on State tested platform scales.

2. Chain test. The chain used consists of a set of rollers accurately calibrated to its weight per foot (weight per meter). During the test, the chain must cover 5 idlers on the belt, 2 approach and 2 retreat idlers along with the weigh idler, plus about 1 foot (0.3 meter) additional on each end. One end is attached to a stationary part of the structure and allowed to ride on the belt over the scale. Care must be taken in sorting and placing this chain on the belt. The test is made by comparing the weight recorded on the meter with the weight obtained by multiplying the weight per foot (meter) of the chain by the number of feet (meters) the belt traveled. The number of feet (meters) the belt traveled is normally determined by measuring the length of the belt to the nearest 0.01 foot (3 millimeters) and counting the number of revolutions of the belt during the test. Additional information regarding the chain test can be found in the resource, National Institute of Standards and Technology (NIST), Handbook No. 44. When performed, the chain test should only be observed by the inspector. The test itself can be very dangerous and should be performed only by an experienced member of the Contractor's staff.

3. Known weight test. The static weight test is the most convenient form of checking the belt scales but is not as accurate as the chain test since the static weight is applied directly to the scale carriage, belt effects are not taken into consideration during the test. The test weight is hung directly from the weigh idler. This weight must be converted to pounds per foot (kilograms per meter) by dividing it by the distance between the weigh idler and the approach idler. This distance must be measured to the nearest 0.01 foot (3 millimeters). If the space from the weigh idler to either adjacent approach idler is not the same, use the average of the two spaces. With this weight foot (per meter) of the static test weight determined, measurement of belt travel and calculation is the same as with the chain test.

For methods 2 and 3, the duration of the tests must be at least ten minutes.

10-2.3 Items Measured by Volume

10-2.3A Truck Measure

Except as noted below, when materials are measured and paid on the basis of volume delivered in trucks, ensure that a receiver is assigned at the point of delivery to issue or receive load tickets and to make periodic computations of yield where applicable.

Item Quantity Tickets (see Chapter 10-2.1C) should be used for recording the volume of materials paid on the basis of truck measure. The tickets should include all information previously noted as required for materials measured by weight, with the substitution of measured volume in place of measured weight to be shown as the quantity received.

Surfacing Material, Gravel, Topsoil, etc.

In lieu of issuing individual load tickets when surfacing materials, gravel backfill, top soil, etc., are measured and paid for on the basis of volume delivered in trucks, it is acceptable for the Project Engineer to maintain a field book record showing a recording for each delivery, issuing one ticket for the total amount delivered for each item at the end of each work shift. The field book record will show the truck number, time of delivery, and volume for each load. The ticket issued shall show all pertinent data including reference to the field book number.

In documenting the size of loads received, ensure the following procedures are followed:

1. The truck box of each hauling conveyance will be measured, calculated, and recorded for final records to the nearest 0.1 cubic yard (cubic meter) based on a struck or water level height. Although state law requires 6 inches (152 millimeters) of freeboard on loaded aggregate material trucks, a water level measurement is fairly accurate due to the normal practice of heaping material in the center.

2. The material receiver should have sufficient loads leveled at the point of delivery in order to judge the quantity being hauled.

3. Load volume will be recorded to the nearest cubic yard (0.5 cubic meter) for pay purposes using the volume computed in part (1) above. If the Inspector questions whether a truck is fully loaded, the load will be leveled. If the vehicle is not fully loaded, the Inspector will measure and document the actual load to the nearest cubic yard (0.5 cubic meter).

Water

In order to document the amount of water delivered to the project, a Water Delivery Record, Form 422-024, should be maintained showing all pertinent information including time, volume, location of delivery for each load, contract number, and truck number. If the Water Delivery Record is maintained by the driver, it should be signed by the truck driver or the Contractor and initialed by the Inspector. Daily spot checks should also be completed verifying the quantities being delivered. In performing these spot checks, things that could be looked for might be the truck's condition, full or empty, and if it is correct in relation to its delivery schedule. When performed, random spot checks should be noted on the Delivery Record itself. At the end of each work shift, an Item Quantity Ticket should be issued to cover the water delivered to the project that day. The Water Delivery Record should be maintained in a manner that allows it to be easily referenced to the WSDOT copy of the Item Quantity Ticket that includes it.

The Project Engineer should ensure that the capacity of each water truck is determined by measuring or weighing, and is recorded in the project records. It is recommended that copies of the truck identification and capacity records be attached to the water ticket book to ensure the information is available to the field Inspector.

When water meters are installed at the discharge point for hydrants or water trucks, the Inspector should record the meter reading at the beginning and end of each shift and issue a ticket for the net quantity of water placed in accordance with contract specifications for the item. The Project Engineer should also ensure that the meters are checked for accuracy and that the checks are recorded in support of payment documentation.

10-2.3B Cross-Sections

Many excavation items are measured by field cross-sections and/or template notes. The Project Engineer should ensure that the project is staked and measured accurately in accordance with guidance noted in the "Basic Surveying" manual along with good engineering practices. As a minimum, the field notes should show the date the data was taken, weather, crew members, and their assigned duties. When re-measurements are required, it is important that the same base line and elevation datum be used.

Documentation of volume measurement for excavation areas which require original and final measurements should contain cross-references between the original notes and the re-measure notes. Also references should be made to the transit notes and elevation datum for that excavation area.

10-2.3C Neat Line Measurement

Some items, such as concrete volumes, are paid based on dimensions detailed in the plans. For these items, the quantities need to be calculated and the calculations made a part of the record. If additional sketches or dimensions are also required in order to compute the quantities, these should be included in the records as well.

Other items, such as structure excavation and gravel backfill, are measured for payment using neat line volumes based on plan dimensions as a maximum limit. These items require field measurement to determine pay quantities that may be less than neat line maximums. Many times, sketches with the dimensions shown are desirable. The dimensions should show the limits of the actual work, except when these limits exceed the maximum allowed for payment, then the dimensions should be limited to the maximum allowed.

10-2.4 Items Measured by Hour/Day

When contract items are to be measured and paid for on an hourly or daily basis, ensure that a WSDOT representative is assigned to verify the hours or days of payment, and issue Item Quantity Tickets or other verified field note records. At least one ticket should be issued at the end of each work shift or working period. The Project Engineer should ensure that tickets show all pertinent information for the item involved. Some items measured by the hour may be eligible for payment during non-shift hours; for example, a 24-hour flashing arrow used for lane closures or detours in effect during nonworking hours. In these situations, an Item Quantity Ticket for one shift may show more hours for payment than are actually available within the shift.

In order to ensure agreement on the hours or days of work performed, Item Quantity Tickets for items of work measured by the hour or by the day should be initialed by the Inspector and signed by the Contractor's representative on a day-to-day basis.

10-2.5 Items Measured by Lump Sum

For items that are to be paid on a Lump Sum basis, the project records should identify the item, the date that the material was received, and/or the date work was accomplished. This can be accomplished by ensuring that a field note record is made showing the dates work was performed, has the initial of the Inspector, and shows the work to be 100 percent complete. A field note should also be used to show any estimated portions for progress payment of a

Lump Sum amount prior to 100 percent completion. It must include the basis on which any quantities used for progress estimate payments were calculated.

10-2.6 Items Measured by Other Units

10-2.6A Linear Measurement

Records for materials measured by length should show the length measured, initials of the persons making the measurements, and the date measured.

For features, such as guard rail and barrier, that are paid by length and which contain repetitive elements or units, the length may be "measured" by calculation. In other words, if the length of a single element is known, then the number of elements may be counted and multiplied by that amount and a total "measured" length determined. Care should be taken to account for odd length elements, such as end sections and custom-fabricated pieces, and for areas where elements overlap or gaps exist.

Records for measurement should also include the beginning and ending stations of the work, recorded by the Inspector or person making the measurement, tying the work to its location on the project. The dates of construction should also be recorded.

10-2.6B Area Measurement

Records for materials or work measured by area should show the length and width measured or otherwise determined, initials of the persons making the measurements, and the date measured. In many instances a sketch of the area with the measurements would be very helpful in showing the computed area. The dates of construction should also be recorded.

10-2.6C Per Each Measurement

Records for materials or work measured per each unit should provide a listing showing the location of each item constructed, dates constructed, and initials of the Inspector or person measuring the item.

10-2.7 Items Bid at "No Charge"

Normal documentation procedures are not required for items bid at "no charge" if the items do not physically constitute a portion of the finished work. However, notes in the diary or Inspector's Daily Report are necessary to show when the work was done. Examples of these items might include water, haul, and embankment compaction.

For items bid at "no charge" which physically constitute a portion of the finished work, normal documentation procedures, such as Item Quantity Tickets or cross-sections, are required to show how the item was incorporated into the project. Examples of these items might include layering materials and prime coat aggregate.

10-3 Final Records for Projects Constructed by Contract

10-3.1 Records

These records consist of field books, Inspector's record of field tests, project and Inspector's diaries, Inspector's Daily Reports, invoices, weigh bills, Item Quantity Tickets, receiving reports, project ledgers, mass diagrams, plotted cross-sections, computer listings, working profiles, and any other documents that could be considered a basis of payment for work performed or materials furnished. All records that are created during the administration of a construction project can be placed in one of two categories, *Permanent Records*, records kept by the Olympia Service Center and State Archives for future reference, and *Temporary Records*, records kept by the Region for a limited period of time after which they are discarded by the Region.

10-3.1A Permanent Records

The Region should ensure that those records designated as *Permanent Records*, records that are to be permanently filed, are assembled as a portion of the overall project final records and are submitted to Olympia Service Center, Engineering Records for filing. All final records sent to the Olympia Service Center for filing will be kept permanently as the Permanent Final Records for the completed project.

All final record books prepared for *Permanent Final Records* are to be numbered as outlined below.

Permanent Records consist of the following:

Records provided by Olympia Service Center:

- Contracts
- Change Orders
- Contract Estimate Payments

Records provided by the Project Office in books numbered as follows:

- Final Record Book Number 1
- Project Engineer's Diary – Book Number 2
- Inspector's Daily Reports – Book Number 3
- Traffic Control Reports – Book Number 4
  Contractors Daily Report of Traffic Control
  Record of Accidents and Traffic Surveillance
- Pile Driving Records – Book Number 5
- Post Tensioning Records – Book Number 6
- Miscellaneous Records – Book No. 7
- As Built Plans and Completed Contractor Provided Shop Drawings

10-3.1B Temporary Final Records

All records designated as *Temporary Final Records* are to be retained within the Region for a period of three years after which they may be destroyed. If a claim, lawsuit, or other circumstance is found to be pending at the end of this three-year period, the Region should further retain those pertinent records until the issues have been resolved. The Region should ensure that those records designated as *Temporary Final Records* are also assembled as a portion of the overall project final records. The date for the beginning of this three-year retention period for State-funded projects is the Acceptance Date, the date the State Construction Engineer signs the Final Contract Voucher Certification accepting the project. If Federal funds are involved in the project, the date for the beginning of this three-year retention period is the date that FHWA accepts the final payment voucher. The Olympia Service Center Accounting Office sends a copy of Retention of Records on Federal Aid Projects (DOT Form 133-072) to the Region which specifically indicates the starting and ending dates for this period.

The following list contains some of the items which may be kept as *Temporary Final Records*. This listing is not a complete listing of all the possible items which could be grouped into this category. In short, *Temporary Final Records* consist of all project records that are not kept as *Permanent Final Records*. If *Temporary Final Records* are kept in numbered books then, in order to eliminate confusion with *Permanent Final Records*, these books are to be numbered consecutively beginning with Book Number 8. Examples of *Temporary Final Records* include:

- Item Quantity Tickets
- Project Engineer's Copy of Estimates
- Project Correspondence
- Inspector's Record of Field Tests
- Scaleman's Diary and Scale Checks
- Scale Test Reports
- Concrete Pour Records
- Record of Field Audits
- Approval of Source of Materials
- Quantity Computation Sheets
- Surfacing Depth Check Records
- Prints of Shop Drawings
- Contractor's Payrolls (Federal Aid Projects)
- Source document files
- Alignment (Transit) Book
- Grade Book
- Cross-Section Notes
- Drainage Notes
- Photographs
- Mass Diagrams
- Computer Summary Sheets
- Computer Listings
- Falsework and Form Plans
- Daily Report of Force Account Worked
- Quarterly Report of Amounts Credited DBE Participation
- Annual Report of Amounts Paid as MBE/WBE Participation

10-3.2 Contracts

The signed original contract documents are maintained in the Contract Processing Section of the Olympia Service Center Accounting Office during the active stage of a contract. After final payment has been made, Accounting sends these documents to Records Services for permanent filing.

10-3.3 Change Orders

Approved change orders are a legal part of the contract documents and are treated just like the original contract documents. For a complete discussion of change orders, see Chapter 1-2.4C.

10-3.4 Contract Estimate Payments

Documentation of contract estimate payments is facilitated by use of the electronic Contract Administration and Payment System (CAPS) which includes both the monthly progress estimates and the final estimate. For a complete discussion of the contract estimate process, see Chapter 1-3.1. Specific information on the final estimate package is found in Chapter 1-3.1D. After final payment has been made, Accounting sends these documents to Records Services for permanent filing.

10-3.5 Final Record Book No. 1

Final Record Book No. 1 is the first book of the *Permanent Final Records* for a construction contract. It contains indices to the records that have been compiled for both *Permanent and Temporary Final Records*. It also identifies the people who worked on the project and provides specific summary information. Final Record Book No. 1 is to be signed by the Regional Administrator or designee. Final Record Book No. 1 should contain a title sheet, Form 422-009, and should be assembled with a semi rigid, water resistant cover.

The following records are to be incorporated into Final Record Book No. 1 in the order as arranged below. No other material is to be included in this book.

1. *Index*. There are two indices referred to within Final Record Book No. 1. The first is an index or detailed listing showing the various sections of Final Record Book No. 1 itself. An example of an index for Final Record Book No. 1 can be found in Figure 10-2. The second index is actually the first section of the book. It provides a detailed listing of all records that have been kept and assembled for the project, including both *Permanent Records* and *Temporary Records*. An example of this listing or index for Section 1 can be found in Figure 10-3.

2. *WSDOT Personnel List*. Section 2 of Final Record Book No. 1 contains a listing of all WSDOT personnel assigned to the project and their classifications. Each person noted should place their identifying initials after their name on the listing in the same manner as it appears in other final record documents.

3. *Comparison of Quantities*. Section 3 of Final Record Book No. 1 contains this CAPS report prepared from the Final Estimate.

4. *Final Estimate Sheets*. Section 4 of Final Record Book No. 1 contains a copy of the Final Contract Voucher Certification.

5. *Contract Estimate Payment Totals*. Section 5 of Final Record Book No.1 contains a copy of this report obtained from the final estimate.

6. *Affidavit of Wages Paid*. Section 6 of Final Records Book No. 1 contains all Affidavit of Wages Paid received from the Contractor, subcontractors, lower tier subcontractors or suppliers performing work or providing certain products to the project.

7. *Change Orders*. Section 7 of Final Records Book No. 1 contains a listing of all Change Orders prepared for the completed project.

8. *Record of Construction Materials*. Section 8 of Final Records Book No. 1 contains a tabulation showing the source of all construction materials. If material of a certain type was obtained from two or more sources, the station limits or parts of a structure relative to each source should be shown. Depending on the size of project and the method used to record this activity, a copy of the completed Record of Materials (ROM) or a summary from the contract's ROM database may satisfy this requirement. This is an acceptable method as opposed to preparing a separate or duplicate listing.

When preparing the individual Final Record Books, other than Book No. 1, it is not necessary to label pages within each book. Where it is appropriate, a table of contents may be added to identify sections within a particular book.

10-3.6 Diary Records

Diary records consist of both the Project Diary(s) and the Inspector's Daily Report (IDR). Together they should provide a complete narrative picture of the project, covering both the normal work processes and anything unusual that might have occurred on the project. Diary records are to be included in the project's *Permanent Final Records*.

10-3.6A Project Engineer's Diary

A complete, well-kept Project Diary is a valuable administration tool. It is a collection point for many of the project's pertinent facts arranged in chronological order. It may show how questions were answered, how problems were solved, progress of the work, and unusual conditions pertaining to working days charged. It can provide data for analysis of both claims and requests for extensions of contract time. It is also available for reference long after the work is completed.

The Project Engineer should ensure that a Project Diary is kept current for every construction contract. It is recommended that the Project Diary be maintained primarily by the Project Engineer. However this responsibility may be delegated to the Assistant Project Engineer or to the Chief Field Inspector. At a minimum, one Construction Project Diary is required for each project. The Project Diary should be used to record all matters of importance which are not covered by other routine reports or may contain a record of routine matters if the circumstances are unusual, conferences with the Contractor or the Contractor's field representative, agreements made, special notes regarding equipment or organization, labor conditions, weather or other causes for delays if of any consequence, and any other matters that might have a bearing on the completion of the project. To avoid keeping separate diaries and to avoid duplication, the Project Engineer and the principal assistant(s) may make entries in the same diary. Each diary entry should include the date of the entry and be followed by a signature or initials on the line immediately under the entry to identify the writer. The Project Engineer is responsible for ensuring the existence of a Construction Project Diary for each project.

10-3.6B Inspector's Daily Report

The Inspector's Daily Report (IDR) is a record of operations for a specific type of work on the project, such as surfacing, grading, paving, bridge, etc., which is being inspected by the writer. Page one of the IDR is a structured sheet of questions addressing identification of work operations and the associated labor and equipment being used to accomplish the work. This page should be filled out completely for all questions that pertain to the specific type of work activity being inspected. Page two is a narrative portion which should include a notation of any orders given or received, discussions with the Contractor, unusual

conditions, delays in the operations, and the presence of any visitors. If an operation is being inspected which results in the partial payment of an item, the item should be identified along with the basis for calculating the partial payment. It is also of value to note the Inspector's or Engineer's activities in the daily report.

The Project Engineer should ensure that the Inspector's Daily Report, Forms 422-004, 422-004A, and 422-004B, is utilized for completing this daily report of activities. Each page of these forms is printed separately in a tablet in duplicate on NCR paper. Both types of tablets have the instructions printed on the tablet cover. The original copy is to be submitted to the Project Engineer each day.

If necessary, the Project Engineer should add comments or remarks on the original copies of the Inspector's Daily Reports to clarify the report. The duplicate copy of the report should remain in the book for the Inspector's immediate information and may be discarded when it is no longer useful for that purpose. The original copies of the Inspector's Daily Report should be included in the Final Records for permanent retention.

Subject to the following, it is acceptable for inspectors to produce IDR's by recording information onto a recording device while at the job site for later transcription to a paper format.

1. All information required on the regular handwritten form must appear on the typed version.

2. The inspector must read and sign the typed document. (It is desirable for this to take place within 24-48 hours of the reporting period. However, it is recognized that certain situations may not permit this time frame and therefore it is not mandatory.)

3. The inspector may make and initial hand corrections to the typed document.

Please note that inspectors who use lap top computers can produce electronic versions of the IDR document. The electronically produced document must be complete, including signature, consistent with the above criteria.

10-3.7 Record of Accidents and Traffic Control

10-3.7A Record of Accidents and Traffic Surveillance

A separate file for each project is to be maintained containing information or documents pertaining to accidents that may have occurred on the project. This could include notes or letters to the file regarding an accident, supporting information for changes made to traffic control in response to an accident, and any accident reports that can be obtained. It should be noted that Chapter 1-2 of this manual does not require an accident report be obtained for every accident that may occur within the project limits. This file should also contain the records of traffic control surveillance prepared in accordance with Chapter 1-2 of this manual. Information in this file should be kept current and upon completion of the contract, submitted to the Olympia Service Center Engineering Records as a part of the project's *Permanent Final Records*.

10-3.7B Contractor's Daily Report of Traffic Control

The Contractor's Daily Report of Traffic Control (DOT Forms 421-040A and 421-040B), completed by the Contractor's Traffic Control Supervisor, should be included as part of the project's *Permanent Final Records*. The Contractor's Daily Report of Traffic Control is discussed in more detail in Chapter 1-2.3 of this manual.

10-3.8 Pile Driving Records

The Pile Driving Record Book, Form 450-004, should be included and made a part of the *Permanent Final Records*. The requirements for pile driving and pile driving records are further detailed in Chapter 6 of this manual.

10-3.9 Post Tensioning Records

The Post Tensioning Record Book, Form 450-005, should be included and made a part of the *Permanent Final Records*. The requirements for post tensioning and post tensioning records are further detailed in Chapter 6 of this manual.

10-3.10 Miscellaneous Records

Miscellaneous Records are optional records and are to be included as the Project Engineer may decide. This part of the records is intended for items that might be considered of added importance. This might include photographs of special features or construction methods, information regarding opening to traffic or dedication activities, or other documentation of particular importance. Placing these in the *Permanent Final Records* will make them a matter of permanent record where they will be retained for future reference.

10-3.11 As-Built Plans

As-Built Plans are a record of any deviations or changes to the originally intended physical product of a contract. As-Built drawings should reflect the same degree of detail as the original plan drawings. As-Built Plans are necessary as a way of preserving the historical detail of what occurred on the project. As-Built Plans can be also used as a basis to plan and design future projects in the same location and to make repairs to damaged structural components or other non-functioning facilities. In addition, state law requires

that owners of "underground facilities" be able to locate their facilities within 24 inches (600 millimeters) of the outside dimensions. As-Built Plans offer a convenient means for recording the location of these facilities.

Within two weeks after a contract has been awarded, the Olympia Service Center Pre-Contract Administration Office or Printing Services Office will furnish the Region Office with one set of large-size black-line prints of the contract plans which will be marked "For As Constructed Plans Only". These plans shall be used by the Project Engineer solely for the purpose of preparing "As-Built Plans". All corrections, revisions, and additional sketches, necessary to depict the work as it was constructed, should be shown on these plans. Corrections are to be made by lining out quantities or other features that were changed during construction, then placing the correction in red ink. These corrections and revisions are to placed onto the plans in a manner that results in neat and legible sheets. A red reproduction pen that writes sharp, clear, and dark with a medium width line shall be used to mark these notations. Fine lined pens do not reproduce when microfilmed and are not to be used. If electronic versions of these plans are available, corrections noted electronically and plotted in a manner that produces these same results are acceptable. Special care must be taken to ensure that changes in construction are entered onto all contract plan sheets affected by the change. For instance, the change in location of a catch basin or manhole may affect the location listed in the structure note sheet, the drainage plan view sheet, and the drainage profile sheet.

If concrete foundations are partially removed, the remaining portions of the foundations should be shown on the As-Built Plans.

It is not required that the As-Built, Summary of Quantities sheets be revised to reflect final estimate quantities. Summary of Quantity sheets are to be marked identifying original plan quantities shown as preliminary estimates of work. It should also be noted that final As-Built quantities for individual unit bid items are to be obtained from the final CAPS ledger for the project.

Correction tape may only be used to complete corrections or revisions made to the Quantity Tabulation and Structure Note sheets. Correction tape is not to be used for noting corrections on any other plan sheet of the As-Built plans. If electronic versions of these sheets are available, corrections noted electronically that clearly depict that a change has been made and plotted in a manner that produces these same results, are acceptable.

In order to help identify the work completed at a particular location, the Quantity Tabulation sheets must be updated to show the revised quantity for all physical feature items that were changed at that location during construction, e.g., guardrail, posts, anchors, guideposts, stripe, lane markers, monuments, etc.

In order to help identify the structure work completed at a particular location, the Structure Note sheets must be updated to show the revised quantity for all physical feature items that were changed at that location during construction, e.g., pipe, catch basins, manholes, inlets, etc. Any structure notes that were added during construction should also be added to the Structure Note sheet. Any alternates that may have been used in lieu of the items shown should be noted.

In addition to the requirements outlined above for As-Constructed or As-Built contract plans, the *Standard Specifications* also require that the Contractor furnish the Engineer with original reproducible tracings or drawings suitable for microfilming or for use in correcting contract plans for shop drawings, schematic circuit drawings, etc., for Illumination, Traffic Signal Systems, and Electrical for shop drawings, including approved revisions for prestressed structural elements and all other structural steel components fabricated from shop plans. Specific requirements for these plans are outlined in Sections 6-02.3(26)A, 6-03.3(7), and 8-20.3(17) of the *Standard Specifications*.

Upon project completion, all "As-Built" plans are to be arranged in numerical sequence, including a cover sheet with pertinent project data in the lower left corner, and submitted to the Olympia Service Center, Engineering Records, where they will become a part of the project *Permanent Final Records*. The As-Built Plans will be processed for microfilming by Engineering Records and will be returned to the Region along with a set of the microfilm aperture cards when they are completed.

10-3.12 Final Record Field Notebooks

Field notebooks bound books used for a specific kind of work such as alignment notes, grading notes, pile driving notes, or loose-leaf notes for specific kinds of work that are bound together by the Region and are made a part of the project final records. Records that appear in the field books should not be duplicated and placed in other final record books. The only exception to this rule are copies of Field Note Records with multiple item numbers which may be copied as described in Chapter 10-4.3, Structure Notes.

Field notebooks should be consecutively numbered and each should have the pages numbered beginning with number one. Typing information in the field book is not necessary, hand lettering is preferred. As with other project records, erasure corrections of any kind are not permitted.

The quantities for payment for each item of work in the field notebook shall correspond directly to entries in the CAPS project ledger. Adequate cross-referencing must be

made between the field notebook and the project ledger in order to trace item quantities and entries from one to the other.

The field notes should show the initials of the persons or person making them, the date, and the weather conditions if appropriate. In some cases, different stages of work will be noted on the same page, such as staking, measurement, and construction. This would require dates and initials at each stage of work. The notes shall also show the dates that quantities are computed and checked along with the initials of those persons doing the work. In all cases, field notes should be neat and legible and show all necessary information. Figures 10-4 and 10-5 show sample field notes and summary for clearing.

Sketches should be shown when necessary to compute a quantity that cannot be computed from the As-Built Plans. Sometimes structure excavation sketches are helpful for determining the pay limits and computing the volume; other sketches are helpful on special details.

Current business practices provide for electronic calculation and storage of all types of detailed surveying data, quantity calculations, etc. Data forms for template input, calculation setup, forms for direct recording of field information, storage media for electronic files, as well as output for the calculated data shall all be treated as an original source documents. See Chapter 10-3.13 for further direction in regards to electronic data.

Re-measure cross-section notes, where a deviation from the established roadway section or slopes has occurred, should be indexed carefully so that they can be identified readily with the original cross-section. For convenience of calculation on re-measure, plotted cross-sections may also be used.

Structure and drainage notes in the Final Record Field Notebook should show the stationing, distance left or right, angle or skew if applicable, flow line elevation and grade in the case of culverts, drains and ditches, and all information necessary for computation of the pay items involved in the construction. For convenience, it is recommended that all pay quantities pertaining to the construction of items listed on the Structure Notes sheets of the plans, be shown in the field book with structure note number, item number, and quantities, and that cross-references be used to show where the totals were obtained. It should be remembered that quantities must be segregated by group number as shown in the summary of quantities contained in the contract plans.

For use as an example, Figures 10-6 and 10-7 show the front and back of a completed field note for the installation of a reinforced concrete sewer pipe.

10-3.13 Electronically Produced Documents

There are many computer applications available for use on a WSDOT highway construction project. Included are programs for earthwork quantities, mass diagrams, basic cut and fill, geometrics, surveying, and for determining structural quantities. In addition, there are many other “stand alone” applications created by individuals in each office for use on personal computers that are also recognized for these kinds of uses.

When electronic computations are used, the output generated must be bound together and identified with a title sheet for final record purposes. These documents are to be made a part of the three-year *Temporary Final Records* retained by the Region as explained in Chapter 10-3.1. When a computer program is used to calculate quantities for payment, the summary sheets containing the quantities entered in the project ledger must be treated as source documents with all required signatures, dates, ledger entry number, and sufficient cross referencing to provide a good audit trail.

10-3.14 Photographs

A detailed photographic record is an important part of the project documents. A photographic record could consist of filmed photographs, digital photos, infrared photographs, video, etc. A photographic record should be taken of unusual equipment, construction methods, problem areas, areas of possible controversy, traffic control, and especially conditions in the area of an accident. In addition to these are “before” and “after” views taken from the same vantage point. These are particularly useful in documenting the progress of work. When photographs are to be maintained as a part of the project documents they must be fully identified. Photographs should clearly note when they were taken (date and time), where they were taken, and who took the picture. Although photographs are placed in the category of three-year *Temporary Final Records*, some Regions have extended the Region retention period for photographs or have even included them as a part of the project’s *Permanent Final Records* for permanent retention.

10-3.15 Pre-Estimate Reports

A Pre-Estimate report prepares the CAPS system to make an estimate payment. This report provides the opportunity for the project office to preview the estimate and is a means to allow for any corrections or deferments to be made before actual payment. The corrected Pre-Estimate Report used to make a progress payment must be signed by the Project Engineer in order to indicate authorization for payment. The signed Pre-Estimate Report must be retained in the project files, and become a part of the three-year *Temporary Final Records*. For additional information regarding progress payments and the CAPS system, see Chapter 1-3.1B of this manual.

10-3.16 Estimate Reports

When a payment is made to the Contractor for a progress or Final Estimate, the project office receives a copy of all the reports that are sent to the Contractor along with the warrant. The Contract Estimate Payment Advice report and the Contract Estimate Payment Totals report should be compared to the Pre-Estimate report verifying that the amount actually paid is the same as the amount authorized. These estimate reports should be kept with the completed Pre-Estimate reports in the project files, and become a part of the three-year *Temporary Final Records*. For additional information regarding progress payments and the CAPS system, see Chapter 1-3.1B of this manual

10-4 Project Ledger System

10-4.1 General

The Contract Administration and Payment System (CAPS) provides both an accounting and payment system, while also acting as an information collection system. The CAPS program uses an electronic project ledger that is maintained current throughout the life of the project as the backbone of the system. All items of work on a project for which payment is made must be entered into the electronic project ledger. Items posted in the ledger become the basis for payment and summary record document for dollars paid to the Contractor, quantity of work performed by the Contractor, status reports during the active life of the contract, and are also used as the basis for final reports when the project is completed.

As work is completed on the project, the project office continuously enters those quantities into the ledger, those records then become eligible for payment when the next progress estimate is due. Processing of monthly progress and project final estimates is further detailed in Chapter 1-3 of this manual. With the ledger entries completed, the application compiles all those records eligible for payment and transfers the data to the payment portion of the CAPS system. Because of the system's ability to store information it is also used as an extensive resource for corporate information regarding the construction program and is used extensively by many other groups throughout WSDOT.

All electronic data incorporated into the CAPS system is stored on either an active file or a history file. These files are both permanently retained and are available for use whenever the need arises. It is not necessary, or intended, that paper copies of the project ledger be retained for final records.

Detailed instructions for the use of the CAPS system can be found in the CAPS Manual.

A key function of CAPS is to provide a complete audit trail for every pay item. An audit trail must be clearly maintained from the original source document through the actual payment to the Contractor. Audits are an effective tool used by both state and federal governments to ensure established procedures and processes are correctly used to maintain the most effective use of the public's funds. It is important that WSDOT maintain sufficient records and documentation to clearly identify an audit trail that is capable of withstanding the test of audits.

In order to satisfy the requirements of an accounting audit, the following conditions must be met:

- There must be a source document for every ledger entry and vice-versa.
- There must be an orderly filing system to facilitate timely retrieval of source documents.
- Both Interim Progress Estimate and Final Estimate reports must be signed by the Project Engineer.
- The Contract Estimate Payment Advice report must be filed along with its corresponding Progress Estimate report.

10-4.2 Source Documents

Each ledger entry must be supported by a detailed source document which specifically identifies the type, amount, and location of the work or material that is being entered into CAPS for payment. Source documents used to support these entries are intended to be complete documents, documents that stand alone, and fully support the payment that is being made. If information from other documents is used in the source document, these additional document(s) must be clearly identified in order to complete the audit trail.

Some examples of source documents include Item Quantity Tickets, Field Note Records, Inspector's Estimates, and Force Account sheets. Source documents are the beginning of the audit trail. They show that a WSDOT Inspector has observed and determined the amount of work performed by the Contractor. Also, the source document must show that all calculations have been checked by a second WSDOT employee to ensure they are correct.

Source documents must show four sets of dated initials as follows: (1) the person who does the original calculations; (2) the person who checks the original calculations; (3) the person who enters the payment quantity/amount in the CAPS ledger; and (4) the person who verifies the CAPS ledger entry. In addition, the source document must also show the ledger entry number.

Ledger entries for estimates of monthly progress quantities for grading, lump sum, or other such items must also be supported by a source document. Among other things, the source document must show the method used for determining the estimate. These methods and source documents must lead to an accurate measurement after the item of work has been completed. For lump sum items, the field notes or diaries can show an estimated percentage of work completed. If this percentage method is used, then a brief discussion outlining the basis for the calculation and any assumptions that were used should also be included.

Many project offices use electronic data collectors for surveying work. These data collectors eliminate the need for hand-prepared field transit and field level books. Many project offices have also developed or routinely use other electronic programs or applications which perform calculations and produce a report of the results. In using these applications there can be confusion regarding the need for checking data that has been compiled and reported electronically. In the absence of specific direction, when an electronically produced record or set of notes is used as a source document for a contract payment, the individual who originated the document should be noted. A second person can then check both input and output for both reasonableness and accuracy. This check may range from duplicating the process to verifying the input. Whatever the case may be, it is recommended that the dated initials of those two individuals be on the source document.

10-4.3 Source Document Filing Systems

Basic criteria for a good Source Document Filing System would include ease of set up, ease of use, and the capability to retrieve any specific document in a timely manner. The source document filing system should also be set up to coordinate easily with final records requirements. The filing system described here for source documents is not mandatory. However, it is presented as one alternative which works well with the CAPS electronic ledger system, the final records process, and is easy to use. The unique ledger entry number from CAPS makes this method work. Files are set up in two books or sets of notes. The first book is organized by Unit Bid Item Number and the second book is organized by Structure Note Number. Source documents are filed by Unit Bid Item Number except for drainage items, which are filed by Structure Note Number. With this method there is only one item per source document except for the drainage items. Drainage items are filed by Structure Note Number because their source document (field note record) normally has multiple items while the Structure Note Number is unique to a specific drainage facility. For all other items, if more than one item appears on a source document, a copy is made for each item noted, the desired item number is highlighted, and then the copy is filed behind their respective Unit Bid Item Number locations. This works extremely well if the source documents are placed in order by date in their respective files.

To look at the source document for a ledger entry, simply note the item number, entry number, and date; go to the file and look for the entry number within the item file. If files are maintained in order by date, this is made even easier. For ledger entries of drainage items, it is necessary to include the structure note number in the remarks section.

This system allows anyone to easily locate the source documents that support a contract payment. These records are retained in the Project Office until Final Record time when the source documents are bound into books with their respective titles and made a part of the three-year *Temporary Final Records.*

10-5 Region Project Documentation Reviews

10-5.1 General

The Region should ensure that reviews of record keeping and documentation procedures are completed during the progress of the work to help ensure that the original field records are being properly prepared and that proper procedures are being followed. The Region should review specific pay items for correctness of the payments made as well as for procedural requirements for documenting and processing of contract payments. Reviews of specific pay items should be recorded on Forms 421-014 and 421-015. Reviews of procedural items should be recorded on either Form 230-036A or Form 230-036B. Version A should be used for the first review made on a project. Version B places more emphasis on individual pay items and should be used for the second review or on larger projects where this emphasis is more appropriate.

On projects that are estimated to cost more than $500,000, the Region should conduct an interim documentation review when the project is approximately 50 percent complete. This review should be thorough and complete to ensure that the documentation records are adequate and are properly maintained. This review should include both procedural checks for those items listed on Form 230-036A and mathematical checks for specific pay items. Audit work for pay items may also be started at this time in preparation for the Final Records Review at Physical Completion. This early audit work could consist of checking any individual items that have been fully completed at the time of the 50 percent documentation review. During these initial reviews, reviews of completed pay items that are noted on Form 421-014, can be kept and then made a part of the Final Records check upon Physical Completion. These would then become a part of the *Temporary Final Records*.

On projects that are estimated to cost more than $500,000 and require more than 100 working days to construct, the interim documentation review should be considered as early as 30 percent completion but, where possible, no later than 50 percent completion. On these larger projects, it is particularly important that the interim reviews be sufficient to verify both documentation and procedural practices preventing inadequate procedures from becoming overly difficult to correct. However, on many projects, the nature of the work completed at 30 percent may or may not provide an adequate representation of the documentation procedure to merit a documentation review. In theses instances, the Region should exercise considerable judgment regarding the timing of interim documentation reviews.

The Region reviewer should also exercise considerable judgment in deciding whether or not to perform additional documentation reviews in conjunction with the reviews described above. In addition to cost and time, other criteria should also be used to evaluate the need for additional documentation reviews. This could include results of previous documentation reviews as well as the history, knowledge, and experience of the specific project office personnel involved. The Region reviewer should be satisfied on a case by case basis that each project's records are adequate and are being properly maintained.

It is recommended that each time a documentation review is performed on a project, that the Region reviewer discuss the results of the review with the project office staff, leaving a completed copy of Form 230-036 to be included in the project temporary records.

10-5.2 Review Procedures for Final Estimates and Final Records

When work on the project is physically complete, it is important that the records be completed and assembled in as timely a manner as possible. The final quantities should be checked and the final estimate or Final Contract Voucher Certification furnished to the Contractor as soon as is reasonably possible.

In order to facilitate this, the Project Office should ensure that the overall project final records, including the final contract quantities, are made ready for Region review as timely as can be and that the Region has completed their review shortly thereafter.

The Region final records reviewer should check to see that the documentation procedures are correct for each type of payment item. Following this, the reviewer should select about 10 percent of the items and make a check of approximately 10 percent of the quantity records for procedural compliance and mathematical accuracy. Projects with less than 60 pay items may require more than 10 percent to be checked. In these situations, the reviewer must check enough payment items to ensure the procedure and accuracy used for item calculations. Additionally, larger projects (over 250 items) may require less than 10 percent to be reviewed. In most instances however, if care is exercised in selecting the review items to cover the full range of payment types, a review of approximately 25 items is usually sufficient to verify the procedure and accuracy for item calculations. The Region may exercise considerable judgment regarding procedures for this check. A suggested procedure for this check is as follows:

- Quantities based on electronic computations, such as earthwork, re-steel, etc. Determine mathematical accuracy of summaries.
- Items paid by linear measurement, such as curb, gutter, guardrail, slope treatment, etc. Check the mathematical accuracy of the summary on a random basis while still ensuring a representative quantity.
- Quantities paid on the basis of Item Quantity Tickets. Selectively determine accuracy of book totals, machine adding tapes, receiving reports, and summary sheets.
- Items paid per each, such as inlets, lane markers, etc. Similar to the procedures used above for items paid by linear measurement.
- Items paid by unit measurement involving computations such as structure excavation, concrete masonry, clearing, etc. A sampling of the computations (perhaps 5 percent) should be followed through for arithmetical correctness. Verify summary totals.

These random or spot checks are intended to be a review of a representative sampling of the records. As such, the results of this check may be an indicator for the overall condition of the records. The number of errors found within this sampling compared to the number of records checked, can be representative of the potential for errors that might exist within the remaining unchecked records. A significant number or percentage of errors within this sampling may indicate that additional review of the project records is necessary At the discretion of the Region, this review may be expanded in order to account for the results of this sampling. In some instance a complete check of all items might also be desirable. The Regional reviewer should mark, initial and date those portions of the records that have been reviewed. The Examination Sheets for Contract Items, Form 421-014, should be kept until the final record check is completed and then filed with the *Temporary Final Records* where they can be reviewed should an audit occur.

Washington State Department of Transportation

Item Quantity Ticket

Date *	Location	Group
Remarks		

Time Received	○ AM ○ PM	Time Weighed	○ AM ○ PM
Received By *		Weighed By	
Pit Number		Truck Number *	
Check One * ○ Tons ○ Hours ○ Cu. Yds. ○ M. Gal. ○ LBS. ○ Each ○ Days		Legal Gross Weight	
		Gross *	
		Tare *	
		Net *	
Other Unit of Measure		This Load	Total

Item Identification	
Contract Number *	Item Number *
Item Description	
Subcontractor	
Contractor	
*** Required Information**	Ticket Number

DOT Form 422-021
Revised 4/00

Figure 10-1

Contract #6767
Johnson Creek Bridge 113/38

Columbia Basin Region

Final Records Book Number 1

ITEM	SECTION
Listing of All Final Record books	1
Listing of State Personnel	2
Comparison of Quantities	3
Final Contract Voucher	4
Contract Estimate Payment Totals	5
Affidavit of Wages Paid	6
Change Orders	7
Record of Construction Materials	8

Figure 10-2

Contract #6767
Johnson Creek Bridge 112/38
Columbia Basin Region

Permanent Final Records
(Retained at OSC Records Services)

Book Description		Book No.
Final Records Book No. 1		1
Project Engineers Diary		2
Inspector's Daily Reports		3
Traffic Control Reports		4
Pile Driving Records		5
Post Tensioning Records	(Not used for this project)	-
Miscellaneous Records For Permanent Storage		7

As Built Plans (submitted under Separate cover dated 8/10/00)

Temporary Final Records
(Retained Within the Region)

Description

- Item Quantity Tickets
- Project Engineer's Copy of Estimates
- Inspector's Record of Field Tests
- Scaleman's Diary and Scale Checks
- Scale Test Reports
- Concrete Pour Records
- Record of Field Audits
- Surfacing Depth Check Records
- Approval of Source of Materials
- Quantity Computation Sheets
- Source document files
- Drainage Notes
- Contractor's Payrolls (Federal Aid Projects)
- Prints of Shop Drawings
- Alignment (Transit) Book
- Grade Book
- Cross-Section Notes
- Photographs
- Mass Diagrams
- Computer Summary Sheets
- Computer Listings
- Falsework and Form Plans
- Daily Report of Force Account Worked

Figure 10-3

Washington State Department of Transportation **FIELD NOTE RECORD**

BOOK NO. _____ PAGE NO. _____

CONTRACT NO.	STATION	LINE	C/S
4747	see detail	L Line	2316

STAKED BY / MEASURED BY	DATE	WORK STARTED	WORK COMPLETED
G Lewis	2-12-95	2-5-95	2-9-95

CALCULATED BY	DATE	CHECKED BY	DATE	INSPECTOR'S SIGNATURE	DATE
HL	2-14-95	CB	2-15-95	John Smith	2-9-95

Crew: Lewis M, Barnes, Toms
Weather: Clear, cool

Clearing & Grubbing

Group 1 Total 21 172 m^2 From reverse side

= 2.12 hectares

Group 2 Total 14 609 From page 4

= 1.46 hectares

Project Total = 3.58 hectares

ITEM NO.	ITEM	GROUP NO.	DATE	UNIT	QUANTITY	RAMS NO.	BASIS OF MATERIAL ACCEPTANCE	CAPS ENTRY NO.	INTIALS POST	INTIALS CK	EST. NO.
2	clearing & Grub.	1	2/9/95	hectare	2.12	—	—	7	DS 4/16	CR 4/20	1
2	clearing & Grub.	2	2/9/95	hectare	1.46	—	—	8	DS 4/16	CR 4/20	1

DOT Form 422-635 (Front)
Revised 9/95

Figure 10-4

CONTRACT NO. 4747

STATION	LEFT	RIGHT	LENGTH OR WIDTH	AREA m^2	REMARKS
Group 1,	Begin	Clearing			
57+400		8-15			
57+420		8-15	7	140	
57+440		10-15	6	120	
57+460	0	10-15	5	100	
57+480	18-10	12-15	8	160	
57+500	18-3	0	13	260	
57+520	18-1		16	320	
57+540	18-0	0-7	21	420	
57+560	21	7	26.5	530	
57+580	24	7	29.5	590	
57+600	24	7	31		
57+620	24				
57+640				590	
		7	29.5	590	
	21	10	31	620	
61+000	18	7.5	28.25	565	
61+020	18	7.5	25.5	510	
61+040	18	5.5	24.5	490	
61+060	18.5	5.5	23.75	475	
61+080	17.5	5	23.25	465	
61+100	17.5	5.5	22.75	455	
61+120	17.5	5.5	23	460	
61+140	17	5	22.5	450	Group 1 End Clearing
			PAGE TOTAL	21 172	

DOT Form 422-635 (Back)
Revised 9/95

Figure 10-5

Washington State Department of Transportation

FIELD NOTE RECORD FOR DRAINAGE

BOOK NO. _____ PAGE NO. _____

CONTRACT NO.	STATION	LINE	C/S	CODE NO.
4747	62+170 to 62+220	L Line	1701	9-15

STAKED BY	DATE	WORK STARTED	WORK COMPLETED
T. Roberts	1-12-95	1-16-95	1-24-95

CALCULATED BY	DATE	CHECKED BY	DATE	INSPECTOR'S SIGNATURE	DATE
TMC	1-26-95	DCM	1-30-95	C. Stokes	1-24-95

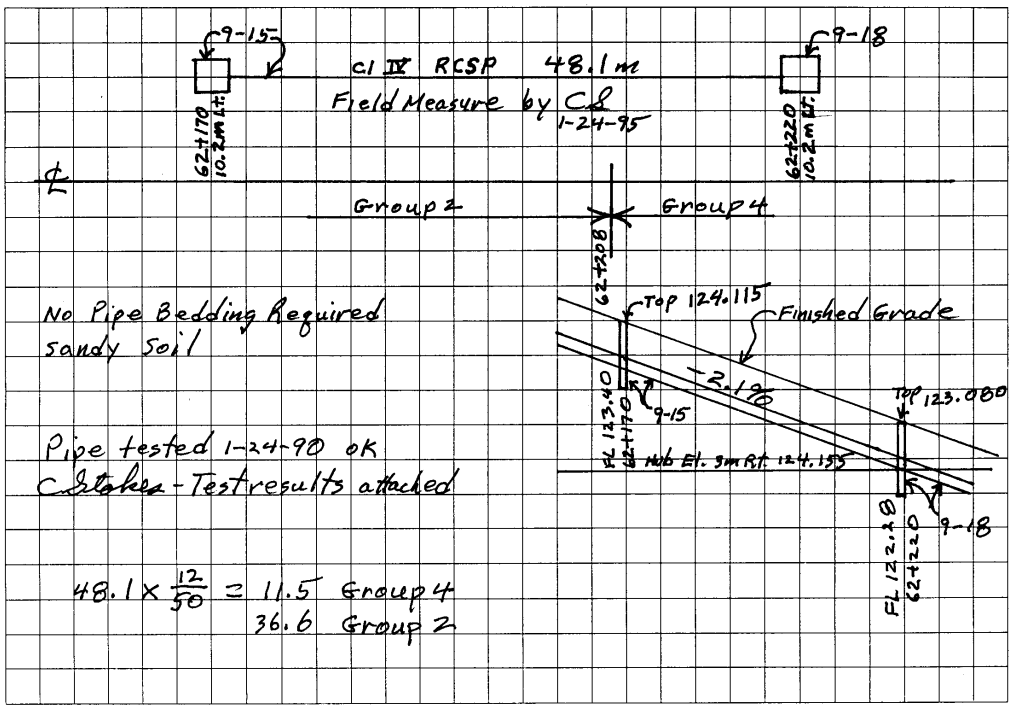

ITEM NO.	ITEM	GROUP NO.	DATE	UNIT	QUANTITY	RAMS NO.	BASIS OF MATERIAL ACCEPTANCE	CAPS ENTRY NO.	INTIALS POST	INTIALS CK	EST. NO.
7	Str. Exc. Cl. B	2	1/18/95	m^3	17.6	—	—	53	DS 1/19	CR 1/20	1
7	" " " "	4	1/18/95	m^3	6.7	—	—	54	DS 1/19	CR 1/20	1
24	Cl. IV RCSP 300 mm	2	1/24/95	m	36.6	4063	Tag A123456	76	DS 1/25	CR 1/26	1
24	" " " "	4	1/24/95	m	11.5	4063	Tag A123456	77	DS 1/25	CR 1/26	1
25	Testing Sewer Pipe	2	1/24/95	m	36.6	—	—	78	DS 1/25	CR 1/26	1
25	" " "	4	1/24/95	m	11.5	—	—	79	DS 1/25	CR 1/26	1
26	C.B. Type 1	2	1/24/95	Each	1	4063	Tag A123456	80	DS 1/25	CR 1/26	1

DOT Form 422-637 (Front)
Revised 9/95

Figure 10-6

BOOK NO. _____ PAGE NO. _____

STRUCTURE EXCAVATION (PIPE STRUCTURE EXCAVATION WIDTH = 1 m)

STATION	FLOW LINE GRADE	ORIGINAL GROUND	SUB-GRADE	CENTERLINE CUT FLOW LINE	CENTERLINE CUT BOTTOM DITCH	RK 1.8m Rt OFFSET HUB	OFFSET CUT-F.L.	REMARKS
CB9-18								
0+000	122.28	123.02		C-0.74		122.97	C-0.69	
0+000.7	122.29	123.02		C-0.73				Begin Str. Exc.
0+010	122.53	122.96		C-0.43				
0+020	122.80	123.14		C-0.34		123.51	C-0.71	
0+030	123.00	123.38		C-0.38				
0+040	123.33	123.60		C-0.27		124.05	C-0.72	
0+049.3	123.38	123.81		C-0.43				End Str. Exc.
0+050	123.40	123.81		C-0.41		124.21	C-0.81	
CB9-15								

0.05m added for pipe thickness

REMARKS Str. Exc.

										m^3	
GRP 4	0+000.7	C-0.74	0.64	X	9.3	X	1	=	5.95		
	0+010	C-0.43	0.48	X	1.5	X	1	=	0.72		
	0+011.5	C-0.42	0.43	X	8.5	X	1	=	3.66	6.7 Group 4	
GRP 2	0+020	C-0.34	0.41	X	10	X	1	=	4.10		
	0+030	C-0.38	0.38	X	10	X	1	=	3.80		
	0+040	C-0.27	0.40	X	9.3	X	1	=	3.72		
	0+049.3	C-0.43							15.3 Group 2		

CB 0.85 X 0.91 X 0.61

1.46 X 1.52 X 1.04 = 2.3 m^3

6.7
15.3
2.3
24.3 m^3 Total Str. Exc.

Pay 6.7 m^3 Grp. 4
17.6 m^3 Grp. 2

DOT Form 422-637 (Back) Revised 9/95

Figure 10-7

11-1 Introduction

This chapter of the manual is published to acquaint engineers and inspectors with the various forms provided by WSDOT for their use in keeping records of the construction activities and payment for the various phases of the work.

The following pages contain a list of forms to be used in reporting project progress. An attempt has been made to include samples of the forms listed in this manual.

No attempt has been made to include the number of copies of the forms to be made for each distribution. Normally, distribution of copies will be as indicated on the form.

Although this chapter only includes the metric version of a form, both English and metric versions are available.

11-2 General Instructions

The following list of forms is categorized under the responsible persons or offices which are engaged in the administration of construction contracts.

When a form is revised, the previous version (except those indicated by an asterisk) may be used until the existing supply is gone. If the supply of the older form is not exhausted at the end of six months after the revision date shown below, the supply of old forms should be discarded and the latest version used. The latest version may be used immediately if desired.

Blank forms should be ordered when supplies run low rather than photocopying an existing form. Blank forms should be photocopied only for emergency use. This will help ensure that the latest version of the form is used.

Form numbers followed by the letters “EF” indicate that an electronic version of the form is also available.

*** Indicates only forms with the revised date shown are to be used. All older forms will be discarded.**

11-2A Project Office

Form No.	Revised Date	Form Name	Page
272-051	8/93	M/D/WBE On-Site Review	65
272-054	5/84	Monthly Employment Utilization Report Worksheet	79
272-060A	3/87	Federal-Aid Highway Construction Annual Project Training Report	91
350-009	12/95	Concrete Cylinder Transmittal	17

Form No.	Revised Date	Form Name	Page
350-012 EF	12/96	Batching Process Verification for Ready Mix Concrete	13
350-016	2/80	Asphalt Sample Label	18
350-023	8/92	Pit Evaluation Report	1
350-026	12/95	Preliminary Sample Transmittal	17
350-042 EF	9/97	Report of Beam Test	19
350-056	7/87	Sample Transmittal	18
350-073	7/95	Asphalt Concrete Test Section Report	21
350-074 EF	5/95	Field Density Test	22
350-092 EF	6/97	Asphalt Concrete Pavement Compaction Control Report	20
350-100A EF	1/97	Asphalt Concrete Mix Test Report	23
350-114	11/95	Summary Report of Acceptance, Sampling and Testing	84
350-115 EF	11/94	Contract Materials Checklist	67
350-566 EF	4/96	Yield and Cement Content	45
350-567 EF	4/96	Concrete Acceptance of Slump and Air Price Adjustment	96
350-568 EF	4/96	Adjust Concrete Mix Design	46
350-572	2/91	Transmittal of Manufacturer's Certificate of Compliance	26
351-006 EF	5/84	Soil Sample Transmittal Letter	2
351-015 EF	11/97	Daily Compaction Test Report	24
410-025 EF	9/86	Transmittal of Falsework, Form, and Shop Drawings	3
410-027	12/95	Test Pile Record	7
420-012 EF	1/96	Recommended Changes to Specifications and Construction Manual	4
421-006 EF	8/92	Order to Suspend Work	86
421-007 EF	8/92	Order to Resume Work	87
421-010 EF	**3/93 ***	**Prime Contractor Performance Report**	9-10
421-026	5/95	Asphalt Concrete Pavement Random Sample Worksheet	92
421-045 EF	2/97	WSP Field Check List	97
422-004 EF	**4/97 ***	**Inspector's Daily Report**	56

Revised Form No.	Date	Form Name	Page
422-004A EF	**12/92 ***	**Inspector's Daily Report**	57
422-004B EF	**4/96 ***	**Inspector's Daily Report**	58
422-007 EF	3/98	Report of Protested Work	98
422-008 EF	**3/98 ***	**Daily Report of Force Account Worked**	27
422-009 EF	3/79	Final Record Notes Title Page	11
422-009B EF	6/81	Final Record Notes Title Page	12
422-010 EF	**9/97 ***	**Force Account Equipment Rate Request**	15
422-012	2/82	Title Sticker — Final Record Books	14
422-020	5/95	Inspector's Record of Field Test	28
422-021	9/95	Item Quantity Ticket	29
422-024	7/95	Water Delivery Record	29
422-027 EF	5/97	Scaleman's Daily Report	30-31
422-568	5/95	Load Tally Sheet	25
422-635 EF	3/98	Field Note Record	32-33
422-636 EF	9/95	Field Note Record (Sketch Grid)	34-35
422-637 EF	9/95	Field Note Record for Drainage	36-37
422-644 EF	**12/95 ***	**Daily Report of BST Operations**	38
424-003 EF	12/96	Employee Interview Report	16
450-001 EF	1/96	Manufacturer's Certificate of Compliance for Ready Mix Concrete	40
450-004	12/95	Pile Book	63
540-020 EF	12/95	Backflow Prevention Assembly Test Report	8
750-001 EF	10/95	Fall Protection Plan	5-6

11-2B Regional Office

Form No.	Revised Date	Form Name	Page
230-036A EF	1/97	Initial Documentation Review (Procedures)	47
230-036B EF	1/97	Follow-Up Documentation Review	48
272-061 EF	5/87	Federal-Aid Highway Construction Cumulative Training Report	90
410-001	8/78	Verbal Approval	42
420-012 EF	1/96	Recommended Changes to Specifications and Construction Manual	4

Form No.	Revised Date	Form Name	Page
421-014 EF	1/97	Examination Sheet for Contract Items	43
421-015	2/78	Recapitulation of Final Contract Examination	44
422-100 EF	10/94	Inspection of Federal-Aid Project	61
FHWA-1392	3/92	Federal-Aid Highway Construction Summary of Employment Data	49-50

11-2C Fabrication Inspector

Form No.	Revised Date	Form Name	Page
350-004	1/96	Fabrication Progress Report	51
350-021	4/96	Approved for Shipment Tag	52
350-086 EF	9/95	Prestress Pile Record	53
450-002	12/95	Prestressed Concrete Girder Report	54
450-005	1/97	Post-Tensioning Record	55

11-2D Olympia Service Center

Form No.	Revised Date	Form Name	Page
410-001	8/78	Verbal Approval	42
422-101 EF	10/94	Final Inspection of Federal-Aid Interstate Project	62
FHWA-1392	3/79	Federal-Aid Highway Construction Summary of Employment Data	49-50

11-2E Materials Laboratory (Olympia Service Center or Region)

Form No.	Revised Date	Form Name	Page
350-054 EF	8/92	Monthly Progress Sampling and Inspection Report	64
350-112 EF	9/97	Correlation — Nuclear Gauge to Core Density	39
350-564	1/96	Gradation Chart	68
351-003	12/95	Log of Test Borings	69-70

11-2F Contractor

Form No.	Revised Date	Form Name	Page
134-146 EF	1/95	Final Contract Voucher Certificate	71
272-049 EF	5/90	Training Program	88
272-050 EF	5/90	Apprentice/Trainee Approval Request	89

Revised Form No.	Date	Form Name	Page
350-040 EF	4/96	Proposed Mix Design	66
350-071 EF	**1/98 ***	**Request for Approval of Material**	72
350-109 EF	8/92	Certification of Materials Origin	85
410-029	8/92	Contractor's Construction Process Evaluation	59-60
420-004 EF	**10/94 ***	**Contractor and Subcontractor or Lower-Tier Subcontractor Certification for Federal-Aid Projects**	73
421-009 EF	12/96	Release — Retained Percentage (Except Landscaping)	74
421-012 EF	**4/94 ***	**Request to Sublet Work**	75
421-023 EF	6/97	Affidavit of Amounts Paid DBE/MBE/WBE Participants	80
421-040A	2/94	Contractor's Daily Report of Traffic Control - Summary	76
421-040B	10/95	Contractor's Daily Report of Traffic Control - Traffic Control Log	77
421-506	9/87	Contract Progress Schedule	78
540-509 EF	3/96	Commercial Pesticide Application Record	41
820-010	3/96	Monthly Employment Utilization Report	94-95
FHWA-1391	3/92	Federal-Aid Highway Construction Contractors' Annual EEO Report	81
FHWA-47	**6/90 ***	**Statement of Materials and Labor Used by Contractors on Highway Construction Involving Federal Funds**	82-83

Alphabetical Listing of Forms

Form No.	Form Name	Page
350-568	Adjust Concrete Mix Design	46
421-023	Affidavit of Amounts Paid DBE/MBE/WBE Participants	80
272-050	Apprentice/Trainee Approval Request	89
350-021	Approved for Shipment Tag	52
350-092	Asphalt Concrete Pavement Compaction Control Report	20
350-100A	Asphlat Concrete Mix Test Report	23
421-026	Asphalt Concrete Pavement Random Sample Worksheet	92
350-073	Asphalt Concrete Test Section Report	21
350-016	Asphalt Sample Label	18

Form No.	Form Name	Page
540-020	Backflow Prevention Assembly Test Report	8
350-012	Batching Process Verification for Ready Mix Concrete	13
350-109	Certification of Materials Origin	85
540-509	Commercial Pesticide Application Record	41
350-567	Concrete Acceptance of Slump and Air Price Adjustment	96
350-009	Concrete Test Cylinder Transmittal Letter	17
350-115	Contract Materials Checklist	67
421-506	Contract Progress Schedule	78
420-004	Contractor and Subcontractor or Lower-Tier Subcontractor Certification for Federal-Aid Projects	73
410-029	Contractor's Construction Process Evaluation	59-60
421-040A	Contractor's Daily Report of Traffic Control - Summary	76
421-040B	Contractor's Daily Report of Traffic Control - Traffic Control Log	77
350-112	Correlation — Nuclear Gauge to Core Density	39
351-015	Daily Compaction Test Report	24
422-008	Daily Report of Force Account Worked	27
422-644	Daily Report of BST Operations	38
424-003	Employee Interview Report	16
421-014	Examination Sheet for Contract Items	44
350-004	Fabrication Progress Report	51
750-001	Fall Protection Plan	5-6
272-060A	Federal-Aid Highway Construction Annual Project Training Report	91
FHWA-1391	Federal-Aid Highway Construction Contractors' Annual EEO Report	81
272-061	Federal-Aid Highway Construction Cumulative Training Report	90
FHWA-1392	Federal-Aid Highway Construction Summary of Employment Data	49-50
350-074	Field Density Test	22
422-635	Field Note Record	32-33
422-637	Field Note Record for Drainage	36-37
422-636	Field Note Record (Sketch Grid)	34-35

Form No.	Form Name	Page
422-101	Final Acceptance of Federal-Aid Interstate Project	62
134-146	Final Contract Voucher Certificate	71
422-009	Final Record Notes Title Page	11
422-009B	Final Record Notes Title Page	12
230-036B	Follow-Up Documentation Review	48
422-010	Force Account Equipment Rate Request	15
350-564	Gradation Chart	68
230-036A	Initial Documentation Review (Procedures)	47
422-100	Inspection of Federal-Aid Project	61
422-004	Inspector's Daily Report	56
422-004A	Inspector's Daily Report	57
422-004B	Inspector's Daily Report	58
422-020	Inspector's Record of Field Test	28
422-021	Item Quantity Ticket	29
422-568	Load Tally Sheet	25
351-003	Log of Test Borings	69-70
272-051	M/D/WBE On-Site Review	65
450-001	Manufacturer's Certificate of Compliance for Ready Mix Concrete	40
820-10	Monthly Employment Utilization Report	94-95
272-054	Monthly Employment Utilization Report Worksheet	79
350-054	Monthly Progress Sampling and Inspection Report	64
421-007	Order to Resume Work	87
421-006	Order to Suspend Work	86
450-004	Pile Book	63
350-023	Pit Evaluation Report	1
450-005	Post-Tensioning Record	55
350-026	Preliminary Sample Transmittal	17
350-086	Prestress Pile Record	53
450-002	Prestressed Concrete Girder Report	54
421-010	Prime Contractor Performance Report	9-10
350-040	Proposed Mix Design	66
421-015	Recapitulation of Final Contract Examination	44

Form No.	Form Name	Page
420-012	Recommended Changes to Specifications and Construction Manual	4
421-009	Release — Retained Percentage (Except Landscaping)	74
350-042	Report of Beam Test	19
422-007 EF	Report of Protested Work	98
350-071	Request for Approval of Material	72
421-012	Request to Sublet Work	75
50-056	Sample Transmittal	18
422-027	Scaleman's Daily Report	30-31
351-006	Soil Sample Transmittal Letter	2
FHWA-47	Statement of Materials and Labor Used by Contractors on Highway Construction	82-83
350-114	Summary Report of Acceptance, Sampling and Testing	84
410-027	Test Pile Record	7
422-012	Title Sticker — Final Record Books	14
272-049	Training Program	88
410-025	Transmittal of Falsework, Form, and Shop Drawings	3
350-572	Transmittal of Manufacturer's Certificate of Compliance	26
410-001	Verbal Approval	42
422-024	Water Delivery Record	29
350-566	Yield and Cement Content	45
421-045	WSP Field Check List	97

11A:P:DP/CM

Washington State
Department of Transportation

Pit Evaluation Report

PIT NO.

LOCATION

(Show approximate limits and measurements of actual deposit, property lines, area already worked, etc. Use notes on sketch to clarify)

SKETCH

PIT OWNED BY

LEASED	FOR HOW LONG?	ROYALTY BASIS	HOW MUCH PER YARD?

DATE LAST WORKED	YDS. REMOVED	CONTRACT NO.

Supplementary data. (Type of material made, quality and uniformity, amount of oversize, difficulties in operation, washing required, any unusual features of pit, etc.)

HAS THE SITE BEEN RECLAIMED?
☐ YES ☐ NO ☐ PARTIAL ☐ COMPLETE

DO RECLAMATION MEASURES CONFORM WITH THE APPROVED RECLAMATION PLAN?
☐ YES ☐ NO IF NO, EXPLAIN:

IS FURTHER TESTING REQUIRED BEFORE ESTIMATE CAN BE MADE OF REMAINING QUANTITY?
☐ YES ☐ NO EXPLAIN:

ESTIMATED CUBIC YEARS STILL AVAILABLE

REMARKS: (Stripping required, recommendations for future development, additional area required)

BY _____
Project Engineer

NOTE: Any testing information by Soils Engineer should be added with red pencil.

DISTRIBUTION: WHITE – District Operations Engineer
CANARY – District Soils Lab.
PINK – Materials Engineer
GOLDENROD – Project Engineer

DOT 350-023
Revised 8/92 Frame

Washington State
Department of Transportation

SOIL SAMPLE TRANSMITTAL LETTER

DEPARTMENT OF TRANSPORTATION
MATERIALS LABORATORY
1655 SOUTH SECOND
TUMWATER, WA 98504

PLACE
DATE

I HAVE FORWARDED BY TODAYS _____ THE FOLLOWING SOIL SAMPLES:

CONTRACT OR JOB NO.	S.R.	SECTION

SAMPLE NO.	STATION AND OFFSET	DEPTH (FROM-TO)	DESCRIPTION	REPRESENTING STATION TO STATION	REMARKS: (Give information regarding proposed use, spec. tests, etc.)

_____
ENGINEER

DISTRIBUTION:
COPY 1 (WHITE) SUBMIT WITH SAMPLES
COPY 2 (CANARY) ADDRESSEE
COPY 3 (PINK) DISTRICT ENGINEER

DOT FORM 321-000 REVISED 5/94 -650- 1

Washington State Department of Transportation

INTRA-DEPARTMENTAL COMMUNICATION

DATE: _____

FROM: PROJECT ENGR. _____

Phone: (SCAN) _____

SUBJECT: TRANSMITTAL OF FALSEWORK, FORM, AND SHOP DRAWINGS.

CONTRACT NO. _____

SR NO. _____

CONTRACT TITLE _____

TO: BRIDGE AND STRUCTURES OFFICE
CONSTRUCTION PLANS ENGINEER

_____

TRANSMITTED HEREWITH FOR REVIEW AND APPROVAL ARE CONTRACT SHOP DRAWINGS AS FOLLOWS:

ITEMS: _____

_____

_____

_____

SUBMITTED BY CONTRACTOR/SUBCONTRACTOR: _____

_____

NOTE: SUPPLIER AND APPROVAL APPLICABLE TO SHOP DRAWINGS ONLY.

MANUFACTURER/SUPPLIER:

_____

_____

APPROVAL OF SOURCE REQUEST: ITEM NO. _____ REQUEST NO. _____

ACTION: APPROVED ☐ PENDING ☐ DATE _____

PROJECT ENGINEER'S REQUIRED REVIEW FOR CONFORMANCE WITH CONTRACT PLANS AND SPECIFICATIONS HAS BEEN MADE AND APPLICABLE ANNOTATIONS MADE IN GREEN.

SIGNATURE: _____
Project Engineer

Distribution: White - Bridge and Structures Office
Canary - Headquarters Materials Office
Pink - District Construction Engineer
Goldenrod - Project Engineer

DOT Form 410-025
Revised 9/86.

Washington State Department of Transportation

Recommended Changes to Specifications and Construction Manual

To: Specifications Engineer Construction Office PO Box 47354 Olympia, WA 98504-7354	From:	
Proposed By	Job Title	Date

Recommended Changes To:

☐ Standard Specifications Section _____ Page _____

☐ General Special Provisions Number _____

☐ Construction Manual Chapter _____ Page _____

Recommended Change:

Reasons for Recommendation:

Signed _____ Date _____

Operations Engineer or Supervisor of Division

DOT Form 420-012 EF
Revised 1/96

Washington State
Department of Transportation

Fall Protection Plan

DATE	LOCATION	SUPERVISOR

DESCRIPTION OF WORK

Recognized Fall Hazards

- ❑ Ladders
- ❑ Forming
- ❑ Catwalks
- ❑ Sloped Access
- ❑ Work over Water
- ❑ Scaffold
- ❑ Pouring
- ❑ Welding at Height
- ❑ Set Girders
- ❑ Leading Edge
- ❑ Bridge Decks
- ❑ Excavations
- ❑ Drilling Shafts
- ❑ Connect Girders
- ❑ Perimeter Edge, Stairwell, Roof, Window Openinn
- ❑ Work Decks
- ❑ Walkways / Ramps
- ❑ Stressing
- ❑ Tieback Strands

Personnel Hoisting

- ❑ Crane
- ❑ Boom Truck
- ❑ Forklift
- ❑ Other _____

Method of Protection

Fall Restraint

Type of Harness _____

Type of Lanyard _____

Anchorage _____

Control Zones / Warning Lines and Monitor _____

Guardrail ❑ Yes ❑ No

Nets ❑ Yes ❑ No

Other _____

Fall Arrest

Type of Harness _____

Type of Lanyard _____

Type of Life Line _____

Anchorage _____

Deceleration Device ❑ Yes ❑ No

Other Type of Equipment Used _____

Overhead Protection

Hard Hats ❑

89 mm Toe Boards ❑

Warning Signs ❑

Debris Nets ❑

Other ❑ _____
Describe

Tool Handling, Storage, and Securing

89 mm Toe Boards ❑

Debris Nets ❑

Tool Buckets ❑

Tool Belts ❑

Other ❑ _____
Describe

Procedure for Assembly, Maintenance, Inspection, and Disassembly of System

Assembly, disassembly, and maintenance of all equipment will be done according to manufacturer's recommended procedures. A visual inspection of all safety equipment will be done daily or before each use. Any defective equipment will be tagged and removed from service immediately.

DOT Form 750-001 Metric (rev 5)
10/95

A COPY OF THIS WORK PLAN MUST BE ON JOB SITE

Emergency Action Plan

First Aid / CPR

NAMES OF TRAINED PERSONNEL ON SITE

LOCATION OF FIRST AID EQUIPMENT

Initiate Emergency Services (call or radio 911 if available)

LOCATION OF PHONE	PHONE NO. OF SHERIFF	PHONE NO. OF EMERG. RESP. TEAM

DESCRIBE PROCEDURE FOR REMOVAL OF INJURED EMPLOYEE (NOTE: no removal will be attempted without supervision of qualified emergency rescue personnel)

Crane ☐ Yes ☐ No _____ Location

Hoist ☐ Yes ☐ No _____ Location

Winch ☐ Yes ☐ No _____ Location

Block / Tackle ☐ Yes ☐ No _____ Location

Other (describe)

Plan Reviewed at Job Site ☐ Yes ☐ No

Employee Signature	Employee Signature
Employee Signature	Employee Signature

DOT 75-0-00 1 (back)
Revised 1/92

Washington State
Department of Transportation

Test Pile Record

Project	Contract
Structure	Date Driven

Specification:
Bearing Newtons, Min Tip Elev. m

Pile:
Type , Size mm, Length m

Location:
Pier Sta. , Offset m L/R

Elevation:
Cutoff m, Ground m, Final Tip m

Pile Hammer:
Type , Make

Ram Wt. kg, Stroke m, Rated Energy Min. N•m, Max N•m

Pile Tip:
Type

Bearing Formula Used: (*check one*)

☐ $P = \frac{1.63\ MH}{S + 25.4}$ ☐ $P = \frac{1.63\ MH}{S + 2.54}$ ☐ $P = \frac{(9.81\ M + .001Ap)H}{6(S + 2.54)}$

Remarks

Tip Elev.	*	Blows/300 mm	Bearing Newtons	Tip Elev.	*	Blows/300 mm	Bearing Newtons

Project Engineer

Inspector

***Gage pressure or blows/minute as appropriate.**

DOT Form 410-027 Metric
Revised 12/95

Distribution: White — OSC Construction/Records Control
Pink — OSC Materials Lab
Green — Region
Goldenrod — Project Engineer

Washington State
Department of Transportation

Backflow Prevention Assembly Test Report

Name of Premises

Service Address

Location of Assembly

Manufacturer | Model | Size | Serial Number

Type of Assembly
☐ RPBA ☐ DCVA ☐ PVB

Line Pressure at Time of Test

	Check Valve No. 1	Check Valve No. 2	Differential Pressure Relief Valve	Pressure Vacuum Breaker
Initial Test	☐ Held At _____ Press. ☐ Leaked ☐ Closed Tight	☐ Leaked ☐ Closed Tight	☐ Opened At _____ Reduced Pressure ☐ Did Not Open	☐ Air Inlet Opened At _____ Press. ☐ Did Not Open
Repairs	☐ Cleaned Replaced: ☐ Disc ☐ Spring ☐ Guide ☐ Pin Retainer ☐ Hinge Pin ☐ Seat ☐ Diaphragm ☐ Other, Describe	☐ Cleaned Replaced: ☐ Disc ☐ Spring ☐ Guide ☐ Pin Retainer ☐ Hinge Pin ☐ Seat ☐ Diaphragm ☐ Other, Describe	☐ Cleaned Replaced: ☐ Disc, Upper ☐ Disc, Lower ☐ Spring Diaphragm, Large ☐ Upper ☐ Lower Diaphragm, Small ☐ Upper ☐ Lower ☐ Spacer, Lower ☐ Other, Describe	☐ Check Valve Held At _____ Press. ☐ Leaked ☐ Cleaned Replaced: Air Inlet ☐ Disc ☐ Check Disc Air Inlet ☐ Spring ☐ Check Spring ☐ Other, Describe
Final Test	RP _____ Press. ☐ Closed Tight	☐ Closed Tight	Opened At _____ Reduced Pressure	Air _____ Press. Check Valve _____ Press.

Remarks

The Above Report is Certified to Be True

Initial Test Performed By	Organization	Certificate Number	Date
Repaired By			Date
Final Test Performed By	Organization	Certificate Number	Date

DOT Form 540-020 CS
Revised 12/95

Distribution: Originator, Project Engineer, Water Purveyor, O.S.C., Maintenance & Operations Roadside

Washington State
Department of Transportation

Prime Contractor Performance Report

Section I Contractor Data

Report type	Contractor no. (HQ use only)
❒ Interim ❒ Final ❒ Special	

Company Name	
Address	Phone no.
Superintendent	Foreman

Section II Project Data

District	Contract no.	County	SR
	FA no.		

Project title			
Authorized working days	Working days charged	Work starting date	Completion date
Contract award amount		Contract completion amount	

Work class performed by contractor:

Description of work:

Section III Numerical Rating

A ADMINISTRATION / MANAGEMENT / SUPERVISION	*Inadequate.	*Below Standard	Standard	Above Standard	*Superior	Rating
1 Supervision and decision making	2	3.8	4.5	5.6	6.4	
2 Coordination and communication with subcontractors and suppliers	2	2.2	3.2	4.2	4.8	
3 Submission of documents and reports	1	1.8	2.7	3.5	4.0	
4 Adequacy and timeliness of progress schedules	1	1.8	2.7	3.5	4.0	
5 Public safety and traffic control	2	2.2	3.2	4.4	4.8	
6 Compliance with laws, ordinances and regulations	1	1.2	1.9	2.5	3.0	
7 Maintenance of employee safety standards	1	1.2	1.9	2.5	3.0	
8 Coordination and cooperation with department personnel on project matters	1	1.2	1.9	2.5	3.0	
9 Compliance with EEO, affirmative action requirements and MBE/DBE/WBE requirements	1	1.2	1.9	2.5	3.0	
10 Public relations with the general public, other agencies and adjacent contractors	1	1.4	2.1	2.8	3.0	
Total	13	18	26	34	39	
Q QUALITY OF WORK						
1 Adherence to plans and specifications	10	14.0	20	26	30	
2 Standards of workmanship	8	11.5	16	21	24	
3 Completion of final (punch list) work	2	2.5	4	5	6	
Total	20	28	40	52	60	
P PROGRESS OF WORK						
1 Completion of project within allotted time	9	12.5	18.0	23.5	27.0	
2 Scheduling and execution of schedule	3	4.6	6.6	8.6	9.9	
3 Delivery of materials and supplies	1	1.3	1.8	2.3	2.7	
4 Operation and use of equipment	1	1.3	1.8	2.3	2.7	
5 Use of personnel	1	1.3	1.8	2.3	2.7	
Total	15	21	30	39	45	
E EQUIPMENT						
1 Condition	1	1.5	2.0	2.5	3.0	
2 Maintenance	1	1.5	2.0	2.5	3.0	
Total	2	3	4	5	6	
Grand Total (A+Q+P+E) (Performance Rating)	50	70	100	130	150	
RANGE	(50–69)	(70–99.9)	(100)	(100.1–130)	(130.1–150)	

* Explain any inadequate, below standard, and superior ratings in narrative section.

PERFORMANCE SCORE

HQ use only

DOT 421-010X Pg 1 of 2
Revised 3/93

DISTRIBUTION: White — Precontract Administration; Canary — District Administrator; Goldenrod — Project Engineer; Pink — Contractor

Contract No. _____

SECTION IV NARRATIVE RATING

A GENERAL ELEMENTS Enter comments which generally describe the contractor's overall performance and provide background data on the project.

B BELOW STANDARD ELEMENTS Enter comments here to substantiate below standard ratings. (See instructions)

C SUPERIOR ELEMENTS Enter comments here to substantiate superior ratings. (See instructions)

SECTION V AUTHENTICATION AND REVIEW

I certify that I have objectively prepared this report basing it upon data contained in available project records and discussed the report with the contractor.

PROJECT ENGINEER DATE

I have reviewed this report for objectivity and accuracy. I have given a copy of this report to the rated contractor and I have advised the contractor that any appeal must be made within 20 calendar days.

DATE COPY GIVEN/MAILED TO CONTRACTOR OPERATIONS ENGINEER OR DESIGNEE DATE

I have reviewed this Contractor Performance Report and make the following comments and changes as cited herein or on attached sheets.

DISTRICT ADMINISTRATOR DATE

DOT 421-010X Pg 2 of 2
Revised 3/93

DISTRIBUTION: White — Precontract Admin. Canary — District Administrator Goldenrod — Project Engineer Pink — Contractor

DEPARTMENT OF TRANSPORTATION

Olympia, Washington

FINAL RECORD NOTES

BOOK NO.

CONTRACT NO. ..... FEDERAL AID NO. .....

SR NO. .....

COUNTY .....

SECTION .....

NATURE OF IMPROVEMENT .....
Grading, Paving, Graveling, Bridge

STATION ..... TO STATION .....

LENGTH .....

CONTRACTOR .....

WORK BEGUN .....

WORK COMPLETED .....

PROJECT ENGINEER .....

DISTRICT ADMINISTRATOR .....

CHECKED AND
APPROVED: .....
District Administrator

DOT FORM 422-009
REVISED 3/79

DEPARTMENT OF TRANSPORTATION

Olympia, Washington

FINAL RECORD NOTES

BOOK NO.

CONTRACT NO. ..... FEDERAL AID NO. .....

SR NO. .....

COUNTY .....

SECTION .....

NATURE OF IMPROVEMENT .....
Grading, Paving, Graveling, Bridge

STATION ..... TO STATION .....

LENGTH .....

CONTRACTOR .....

WORK BEGUN .....

WORK COMPLETED .....

PROJECT ENGINEER .....

DISTRICT ADMINISTRATOR .....

CHECKED AND
APPROVED: .....
District Administrator

DOT FORM 422-009B
REVISED 6/81

Washington State
Department of Transportation

Batching Process Verification For Ready Mix Concrete

Manufacturer's Plant			WSDOT Contract No.	Contractor	
Date	Time Batched	Truck Number	Beg. Revolution-Count	Certified Ticket No.	Total Vol. This Batch
Concrete Class and Design Mix No.			Location		

	Proposed Batch Weights		Actual Batch Weights	
Cement	_____	lb(kg)	_____	lb(kg)
Flyash	_____	lb(kg)	_____	lb(kg)
CCA (No. _____)	_____	lb(kg)	_____	lb(kg) (Sample Req'd)
CCA (No. _____)	_____	lb(kg)	_____	lb(kg) (Sample Req'd)
FCA (No. _____)	_____	lb(kg)	_____	lb(kg)
	(Including weight of free moisture)			
Water	_____	lb(kg)	_____	lb(kg)
	(Less free moisture)			
Admixtures				
AEA	_____	oz(ml)	_____	oz(ml)
WRA	_____	oz(ml)	_____	oz(ml)
Other _____	_____	oz(ml)	_____	oz(ml)

Date of Scale Certifications (Current within 6 months) _____

List other Contracts for which the Verification Inspection is Valid

_____

_____

This Inspection Indicates that Corrective Action is Needed for:

_____

_____

_____

_____

Verification Inspection Performed By (WSDOT Inspector)	Date
Verification Inspection Witnessed By (Producer Representative)	Date

Corrective Action Taken

_____

_____

_____

_____

Distribution: Region Construction, Region Materials, Project Engineer, FOSSC Mats Lab, Producer

DOT Form 350-012 EF
Revised 12/96

Washington State Department of Transportation

FINAL RECORD NOTES

BOOK NO. **OF** **BOOKS**

CONTRACT NO.

SR NO.	FED. AID NO.

COUNTY

SECTION

NATURE OF IMPROVEMENT (Grading, Surfacing, Paving, Bridge)

TYPE OF NOTES (Transit, Level, Cross Section, Drainage, etc.)

Station to Station

CONTRACTOR

WORK BEGUN	WORK COMPLETED

PROJECT ENGINEER

DISTRICT ENGINEER

DOT FORM 422-012 REVISED 2/82

INDEX ON NEXT PAGE

Washington State
Department of Transportation

Force Account Equipment Rate Request

Description			Rental Rate Blue Book							Hourly Rate	
Equipment Type	Manufacturer	Model/Capacity	Code	Sect	Page	Monthly Rate	Rate Adjust. Factor	Adjust. Monthly Rate/Hr	Oper. Cost/Hr	Working Rate	Standby Rate

$$\frac{\text{Monthly Rate X Adjust. Factor}}{176} = \text{Adjusted Monthly Rate/Hr.}$$

Adjusted Monthly Rate/Hr. + Oper. Cost/Hr. = Working Rate

Adjusted Monthly Rate/Hr. X 0.33 = Standby Rate

Note: When rates are not shown in the Rental Rate Blue Book, the following information must be supplied to establish a Rental Rate.

1. Equipment Type
2. Manufacturer
3. Year Manufactured
4. Model or Capacity
5. Purchase Price*
6. Horsepower
7. Gas or Diesel
8. Contractor (Owner of Equipment)

* Cost is to be shown without sales tax.

DOT Form 422-010 EF
Revised 9/97

Contract _____

Requested By _____ Date _____

Approved By _____ Date _____

Washington State
Department of Transportation

Employee Interview Report
Federal-Aid Interstate Project
Minimum Wage Compliance Survey

Contract Number	SR Number	Federal-Aid Number	Contract Title

Contractor	Sub-Contractor

Interviewer	Date

Employee	Employee Labor Description	Current Duties	Hourly Wage Rate			Remarks (4)
			Stated (1)	Record (2)	Min. (3)	

Distribution: Project Engineer (1)

(1) Wage rate claimed by employee
(2) Wage rate recorded on Contractor's payroll
(3) Minimum wage rate prescribed by the contract wage determination schedule
(4) Include reference to supplemental reports, if any

DOT Form 424-003 EF
Revised 12/96

Washington State
Department of Transportation
Materials Laboratory
P.O. Box 167
Olympia, WA 98507-0167

Concrete Cylinder Transmittal

Section	Contract	F.A. No.	SR No.
C.S.	Org.No.	Date	Avg. Temp. First 10 Days
Mixing Plant	Place	Cement	Type
Sand Source	Water Gal/100 wt. of Cement		
Gravel Source	Approx. Slump	Cement lb./c.y.	
Air Ent. Adm. Brand	Amount Air Ent. Adm. per 100 wt.	% Air	
Water Reducing Additive Brand	Amount Water Reducer per 100 wt.		

Cyl No.	Location (Pier, Column, Curb, etc.)	Date Made	Test Age Days	Class Conc.	Cert. No.

Curing Procedure Used

Remarks

DOT Form 350-009
Revised 12/95

Project Engineer's Signature

Phone

Washington State
Department of Transportation
Materials Laboratory
P.O. Box 167
Olympia, WA 98507-0167

Preliminary Sample Transmittal

Date	Org Number	Contract / Job Number	Pit Number	OSC Lab Number
Preliminary Sample Number	Of	Intended Use		
FA Number	Place	S.R. Number	Section	

Natural Deposit Location (County)
1/4, 1/4, Sec. T. N., R. E. or W.W.M. Access @ Sta. No.

Deposit Type	Avg. Stripping Depth	Avg. Depth Other Stripping	Est. Depth	Known Depth	NW-NW	NE-NW	NW-NE	NE-NE
Estimated Area X	Est. Quantity	This Sample is Considered Truly Representative of			SW-NW	SE-NW	SW-NE	SE-NE
Sample Taken as Follows		Water Available ☐ Yes ☐ No	If Ledge, Will it Shoot ☐ Large ☐ Small		NW-SW	NE-SW	NW-SE	NE-SE
Suitable Plant Site Nearby ☐ Yes ☐ No	Are Other Samples from Same Deposit Included in Shipment ? ☐ Yes ☐ No	Grading Satisfactory for Intended Use ? ☐ Yes ☐ No (Why)			SW-SW	SE-SW	SW-SE	SE-SE
Location of Supplemental Material for Shortage		Other Known Deposits Available ☐ Yes ☐ No	Reference					
Characteristics Not Apparent in Sample		If Worked Previously, When and by Whom ?						
Name and Address of Owner								
Does Sketch Attached Show Relationship to Deposit as a Whole ? ☐ Yes ☐ No	Remarks							

DOT Form 350-026
Revised 12/95

Distribution: White - With Sample
Canary - Project Files

Project Engineer's Signature and Phone Number

Washington State Department of Transportation

ACCEPTANCE/ASSURANCE/INDEPENDENT ASSURANCE SAMPLE TRANSMITTAL

NO.

MATERIAL			CONTRACT NO		HDQTRS. LAB. NO.
ACCEPTANCE SAMPLE NO.	ASSURANCE SAMPLE NO.	I.A.S. NO.	SR NO.		DIST. LAB. NO.
BRAND	HEAT NO.		SECTION		
I.D. NO./LOT NO.	REEL NO.		COUNTY		CITY/COUNTY/AGENCY CONT. NO.
CERTIFICATE NO.	TRUCK/CAR NO.		CONTRACTOR		
STOCKPILE NO.	PIT NO.		SUBCONTRACTOR		
USED AT STATION	TO STATION		SAMPLED AT	BY	DATE
FIELD ☐ ACCEPT ☐ REJECT	BASED ON FIELD TEST NO.		TESTED AT	BY	DATE
QUANTITY REPRESENTED	PRODUCED ON DATE		ASPHALT CONTENT IN MIX DESIGN	ASPHALT CONTENT REQUESTED AT JOBSITE	

SCREEN										Coarse/ Fine Fracture	S.E.	Dust Ratio	S/S	% Asph.	Max. Density
FIELD															
DIST. LAB.															
SPEC'S.															

REMARKS: Mix Design Desired ☐ Yes ☐ No

DOT FORM 350-056 7/87

DISTRIBUTION: WHITE - With Sample
CANARY - Project Files

Project Engineer
Organization Code
Phone: (SCAN)

DOTFORM 350-016
2/80

WASHINGTON STATE DEPARTMENT OF TRANSPORTATION

Certificate No. (Notice of Shipment) . . . . . _____

Asphalt Sample No. . . . . _____

Grade . . . . . _____

Supplier/Brand . . . . . _____

Shipped From . . . . . _____

Shipped To . . . . . _____

Contract Number . . . . . _____

Name of Project _____

Sampled By . . . . . _____

Date Sampled . . . . . _____

Washington State Department of Transportation

Report of Beam Test

Place _____ **Region** _____

Date _____

Contract No. _____ Section _____

F.A. No. _____ S.R. No. _____

Beam No. _____ Modulus of Rupture, R _____ N per sq. mm

Designed Age _____ Days Observed Load _____ N

Test Age _____ Days Corrected Load, P _____ N

Sta. No. _____ Span Length, L _____ mm

Date Made _____ Tested _____ Width, b _____ mm; Depth, d _____ mm

Cement per m^3 _____ kg Average Temperature to Date of Test _____ °C

Cement Type, Brand _____ Curing First 24 Hours _____

Certificate No. _____ Subsequent Curing Methods

Mill Test No. _____

Density _____ kg/m^3

Cement Factor _____ kg/m^3

Source of Sand _____

Source of Gravel _____

Total Water in Mixture _____
(includes water in aggregates)

Slump _____

Fracture *(State if unusual collection of large aggregate, unsound aggregate, wood, etc., in plane of fracture; otherwise mark "OK")*

Air-entraining Admixture ☐ Yes ☐ No

Brand _____

Quantity per m^3 _____

% by Air Test _____

Beam was saturated at time of test and was tested with side (*as cast*) in tension unless otherwise noted.

Formula $R = \frac{3\,PL}{2bd^2}$

Project Engineer _____

DOT Form 350-042 Met EF
Revised 9/97

Distribution: White - Record Copy, Materials Lab; Canary - Materials Copy, Materials Lab; Pink - Memo, Region Engineer; Goldenrod - Memo, Retain - Project Engineer

Washington State Department of Transportation

Asphalt Concrete Pavement Compaction Report

Date	Region	Project Engineer	SR Number	Section	Contract Number

Class	Wearing / Leveling	Air Temperatures Start / End	Gauge Serial Number	Rice Density	Correlation Factor	Plan Depth (D)
☐ A ☐ C ☐ E ☐ G ☐ B ☐ D ☐ F ☐ Other _____	☐ Wearing ☐ Base ☐ Leveling					

Beginning Station	Ending Station	☐ Ahead on Sta. ☐ Back on Sta.	Lot Length (A)	Sublot Length [(A) x 0.2] = (L)	Width (W)	Lane ☐ Lt. ☐ Rt. ☐ EB ☐ WB ☐ NB ☐ SB ☐ Other _____	Lot# / Quantity	ACP Test Temp.

Test Number	(X) Value Table (716)	Random Length (X) x (L)	+ Sublot (L) Increment	+/- Beg. Sta. = Test Sta.	(Y) Value Table (716)	Offset (Y) x (W)	Measured Depth	Core Density	Gauge Readings	Average Reading	Corrected Gauge	Percent of Rice
1			Zero									
2			(L)									
3			(L) x 2									
4			(L) x 3									
5			(L) x 4									

Beginning Station	Ending Station	☐ Ahead on Sta. ☐ Back on Sta.	Lot Length (A)	Sublot Length [(A) x 0.2] = (L)	Width (W)	Lane ☐ Lt. ☐ Rt. ☐ EB ☐ WB ☐ NB ☐ SB ☐ Other _____	Lot# / Quantity	ACP Test Temp.

Test Number	(X) Value Table (716)	Random Length (X) x (L)	+ Sublot (L) Increment	+/- Beg. Sta. = Test Sta.	(Y) Value Table (716)	Offset (Y) x (W)	Measured Depth	Core Density	Gauge Readings	Average Reading	Corrected Gauge	Percent of Rice
1			Zero									
2			(L)									
3			(L) x 2									
4			(L) x 3									
5			(L) x 4									

Remarks

Rollers			
Passes			

Roller Codes:
- SDV - Single Drum Vibrator
- DDV - Double Drum Vibrator
- P - Pneumatic
- TS - Tandem Steel

Gauge Operator	Date	Street Inspector	Date	Contractor	Date

DOT Form 350-092 EF
Revised 6/97

Distribution: Original - Project Engineer; Copy - Contractor; Copy - OSC Materials; Copy - Region Materials

Washington State
Department of Transportation

Asphalt Concrete Test Section Report

Date _____

Gauge _____

STANDARD DENSITY READINGS

NO.		READINGS	AVERAGE	CORRECTED
1.	0 °			
	90 °			
2.	0 °			
	90°			
3.	IP*			
SUM				
AVG.				

GAUGE CORRECTION FACTOR: _____

REMARKS: _____

RICE _____ Std Den. % of RICE _____

STAND. DENSITY - INITIAL PT. _____

INSP. _____ ST. INSP. _____

PROJECT: _____

_____ CONT. NO.: _____

PROJ. ENGR.: _____ SR. NO.: _____

Weather: _____ Air Temp _____ to _____

ACP_____ ACB _____ Thickness _____

Wearing _____ Leveling _____ Class B, D, E, F, G

Lt. _____ Rt. _____ Lane NB SB EB WB

Other: _____

ROLLERS: Name, Type and Mass

1. _____
2. _____
3. _____
4. _____

CONTROL STRIP APPROX. _____ SQ. METERS

Sta. _____ Sta. _____

Roller												
Gauge Reading												
Time (min.) After Pavt. Laydown												
Temp.												
Roller Passes	1	2	3	4	5	6	7	8	9	10	11	12
DENSITY k/m³												
TEMP. °C												

*IP = Initial Point

Region Matls. _____
Project Engineer _____

DOT Form 350-073 Metric
Revised 7/95

Washington State
Department of Transportation

Field Density Test

Contract Number _____ SR Number _____ Date _____

Section _____ Inspector _____

* Test Hole Number			
Sta. to Sta.			
* Test Station			
* Reference to Center Line			
* Reference to Subgrade			
* Material (Silt, Clay, Top Course, etc.)			
Depth of Material (if surfacing)			
Wet Density Determination			
Wet Density kg/cu m 0			
90			
Wet Density kg/cu m Average			
Moisture Determination (Field Test)			
Mass of Tare			
Mass Damp Soil + Tare			
Mass Dry Soil + Tare			
Mass of Moisture			
Mass Dry Soil			
* % Moisture (Field Dried) = Mass of Moisture X 100 / Wt. of Dry Soil			
Gradation Determination (Use Dry Soil from Moisture Determination)			
Mass Retained on 4.75 mm Sieve + Tare			
Mass of Tare			
Mass of Material Retained on 4.75 mm Sieve			
% Retained on 4.75 mm Sieve (% Oversize) = Mass Retained on 4.75 mm Sieve X 100 / Wt. of Dry Soil			
% Passing 4.75 mm Sieve = (100 Minus % Retained)			
Dry Density Determination (Field Test)			
* Dry Density kg/cu m = Mass Density / 1 + (% Moisture / 100)			
Specification Density Determination			
* Maximum Density from appropriate curve kg/cu m			
* Standard, Curve or Lab. No.			
* Corrected Maximum Density from flower pot kg/cm (for non-granular mat. only)			
* Density kg/cu m (% of maximum) = Dry Density X 100 / Maximum Density			
Optimum Moisture Determination			
* Optimum Moisture (from curve)			
* Opt. Moisture Corrected (non-granular mat. only)= Opt. Moisture X % Passing 4.75 mm			

Note: If retest, add letter to number such as 1st test No. 27, retest 27A
***Information is to be transferred to DOT Form 351-015, "Daily Compaction Test Report"**

DOT Form 350-074 Metric
Revised 5/95

Washington State
Department of Transportation

Asphalt Concrete Mix Test Report

SIGN ROUTE	SECTION	CONTRACT NO.	PAGE OF

JMF	CLASS MIX	SAMPLE NUMBER ACCEPTANCE	SAMPLE NUMBER ASSURANCE	OIL SOURCE	PLANT LOCATION	AGG SOURCE	DATE SAMPLED

TIME	ASPHALT PERCENTAGES % ORDERED	% TOLERANCE LIMIT

TEMP MIX °C	TEMP ASPH °C	% PARTICLE COATING	% CALC. FROM PRODUCTION	% ANTISTRIP

WATER CONTENT			
1. Mass Original Sample (Water Content)		3. Mass H_2O (1) – (2)	
2. Mass Dry Sample (Constant @ 110 – 132° C)		4. Percent H_2O $\frac{(3)}{(1)}$ X 100	

EXTRACTION DATA			
5. Mass Original Sample		8. Corrected % Asphalt (7) – (4)	
6. Mass Dry Sample $5 - \frac{(5)\,(4)}{100}$		9. Corrected Mass Asphalt $\frac{(8)\,(6)}{100}$	
7. % Asphalt from Nuclear Gauge		10. Mass Dry Aggregate (6) – (9)	

AGGREGATE GRADATION						
SIEVE	MASS RETAINED *(ACCUMULATIVE)* *	PERCENT RETAINED *(ACCUMULATIVE)* **	PERCENT PASSING	JMF	TOLERANCE LIMITS	% FRACTURE
31.5 mm						
25.0 mm						
16.0 mm						
12.5 mm						
9.5 mm						
6.30 mm						
2.00 mm						
0.425 mm						
0.075 mm						
PAN		NOT USED IN COMPUTING GRADING				
		TOTAL AGGREGATE (From Line 10)				

* Weights to nearest gram.
** Compute to nearest percent except 0.075 mm only to nearest 0.1%

CONTRACTOR	DATE	INSPECTOR	DATE

COMMENTS

DOT Form 350-100A Metric
Revised 1/97

DISTRIBUTION: White - OSC Mats Lab; Canary - Region Mats Lab; Pink - Contractor

Washington State Department of Transportation

Daily Compaction Test Report

Project Engineer _____ Contract Number _____

Contractor _____ Date _____

Project Name _____ Page _____ of _____

Test No.	Sta. and Ref. to C/L	Ref. to Sub-grade	Type of Material and Use	Moisture Percent			Percent Passing 4.75 mm Sieve	Dry Density kg/m³					Comp. Method/ % Min.	Check One	
				Opt.	Opt. Corrected	Field Test		Max.	Corr.	Std. No.	Field Test	% Max		Sat.	Fail*

Optimum Moisture - Moisture content of 4.75 mm Sieve minus from Proctor curve.
Corrected Moisture - Optimum moisture corrected for oversize = Optimum Moisture Content x Percent Passing 4.75 mm Sieve.
Maximum Dry Density - Density from Proctor curve or Maximum Density for Granular Materials Curve.
Corrected Density - Proctor Maximum Dry Density Corrected for oversize.
Standard Number - Laboratory or identifying number of Density Standard used, i.e., Proctor No. or Maximum Density Curve.
Field Test - Moisture content or density of field sample tested.
Method of Compaction (specified): A, B, C, Rock Embankment (RO), Bridge Approach Embankment (BA).
** Note corrective action under Remarks.*

Summary of Compaction Quantities

Test Nos.	Lift Thick.	Compaction Equipment Used (Number, Weight, and Type of Units)	No. of Coverages Per Lift	Daily Quantities (M^3 or Tonne)	Accum. Total Quatities	No. of Density Tests Required To Date
Rock Emb.						

Remarks

_____

_____

_____

_____

_____ Inspector

DOT Form 351-015 Met EF
Revised 11/97

Distribution: Region Construction Engineer, Project Engineer, Region Soils Engineer

Washington State
Department of Transportation

LOAD TALLY SHEET

SHEET _____ OF _____

CONTRACT NO	CONTRACTOR	DATE
ITEM NO	MATERIAL	

NET MASS	TRUCK NO	TIME	NET MASS	TRUCK NO	TIME	NET MASS	TRUCK NO	TIME

Washington State
Department of Transportation

Transmittal of Manufacturer's Certificate of Compliance

Date	Contract No.	SR No.
From *(Project Engineer)*	To *(Contractor)*	

The attached Manufacturer's Certificate of Compliance for a quantity of _____ for Bid Item # _____; Material _____ has been checked for conformance to Section 1-06.3 of the *Standard Specifications* per the checklist shown below.

	Yes	No
1. Is the certification being provided PRIOR to the material being installed?	☐	☐
2. If the answer to number 1 above is "NO," attached is a copy of the contractor's approved request for permission to install prior to providing a Mfg. Cert. for acceptance.	☐	☐
3. Is a Mfg. Cert. proper documentation for this item of material? See Note 2.	☐	☐
4. Is this manufacturer an approved source for this bid item?	☐	☐
5. Does the Mfg. Cert. identify the name of the mfg. and/or fabricator?	☐	☐
6. Does the Mfg. Cert. identify the type or size of material being certified?	☐	☐
7a. Does the Mfg. Cert. identify the quantity of material being certified by type, size, lot, or heat number? See Note 3.	☐	☐
7b. Is a Bill of Lading or invoice attached to verify the quantity? See Note 3.	☐	☐
8. Does the Mfg. Cert. identify the applicable specification (i.e., AASHTO, ASTM, AWWA) that the material is to meet? See Note 4.	☐	☐
9. Does the applicable specification (i.e., AASHTO, ASTM, AWWA) shown on the Mfg. Cert. conform to the contract requirements? See Note 6.	☐	☐
10. Is the Mfg. Cert. signed by a corporate official?	☐	☐
11. Where more than a single delivery is made, are the lot numbers identified?	☐	☐
12. Is a supporting mill test attached showing the physical and chemical test values? See Note 5.	☐	☐

Remarks:

Notes:

1. This form not required for concrete delivery tickets.
2. Check the Record of Materials, Special Provisions, or the completed Request for Approval of Material Sources.
3. Not required for concrete admixtures, cement, liquid asphalt, plastic pavement markings, traffic paint. Rebar cut sheets may be used in lieu of a bill of lading or invoice.
4. Check special provisions for specifications or requirements for materials such as guide posts, plastic pavement markings, traffic paint, geotextiles, and others.
5. Test values required to be supplied with Mfg. Cert. for steel reinforcing bars and structural steel. Mfg. Cert. for some steel items, such as steel culvert pipe items, may reference heats used.
6. If answer is "NO," submit Mfg. Cert. to Headquarters Material Laboratory for approval.

☐ Accepted as proper documentation per Section 1-06.3 of the Standard Specifications.

☐ Manufacturer Certificate of Compliance submitted to Headquarter's Materials Laboratory for "APPROVAL ACTION."

☐ Returned to contractor for correction of "NO" answers recorded in Items _____.

Distribution: HQ Lab – Original District Construction	Signed
	Date

DOT 350-572
2/91

Washington State
Department of Transportation

Daily Report of Force Account Worked

Contract Number	Date	Item Number	Item Name

Prime Contractor	Subcontractor / Lower Tier Subcontractor

Line / Station	Group	Basis of Material Acceptance	RAMS Number

Description of Work Performed

Time Worked Record

	Workers and/or Equipment Working	Occupation of Workers or Equipment Size	Hours Worked		Reg. Rate	O.T. Rate	Amount
			Reg.	O.T.			
1							
2							
3							
4							
5							
6							
7							
8							
9							
10							
11							
12							
13							
14							
15							
16							
17							
18							
19							
20							

Calculated By	Date	Checked By	Date	Total

CAPS Entry Number	Entered By	Date	Entry Verified	Date

Inspector	Contractor's Representative	Title

DOT Form 422-008 EF
Revised 3/98

Washington State
Department of Transportation

INSPECTOR'S RECORD OF FIELD TEST

Cont. No. _____ Date _____ Time _____ Pit No. _____
Acceptance Sample No. _____ Assurance Sample No. _____ I.A.S. No. _____
Material _____ Quantity Produced to Date _____

❒ State Provided Source ❒ Contractor's Source ❒ Informational Sample Only
❒ Material Being Placed in Stockpile ❒ Sampled at Point of Acceptance

Total Mass of Sample Taken _____ (before split)

SIZES		RETAINED		PASSING	SPECIFICATIONS	FRACTURE
63 mm	kg		%	%		%
50 mm	"		%	%		%
37.5 mm	"		%	%		%
36.5 mm	"		%	%		%
25.0 mm	"		%	%		%
19.0 mm	"		%	%		%
16.0 mm	"		%	%		%
12.5 mm	"		%	%		%
9.5 mm	"		%	%		%
6.3 mm	"		%	%		%
Pan	"		4.75 mm	%		%
Total	"		2.00 mm	%		%
			0.85 mm	%		%
			0.60 mm	%		%
			0.425 mm	%		%
			0.300 mm	%		%
			0.180 mm	%		%
			0.150 mm	%		%
			0.075 mm	%		%

Fine Grading (6.3 mm)

MM		RETAINED	PASSING
4.75	g	%	%
3.35	"	%	%
2.36	"	%	%
2.00	"	%	%
1.18	"	%	%
0.85	"	%	%
0.60	"	%	%
0.425	"	%	%
0.300	"	%	%
0.180	"	%	%
0.150	"	%	%
0.075	"	%	%
Pan	"		
Total	"		

			SPECIF.
Organic p.p.m.			Max.
Sand Equivalent			Min.
Fracture Fine	%	%	Min.
Other			

Sieving ❒ Wet ❒ Dry

Moisture Content _____

COARSE AGGREGATES			SPECIF.
Wood Waste	%		% Max.
Fracture	%		% Min.

COMPUTATIONS

REMARKS

❒ Conditionally Accepted.
❒ Substandard Material.
❒ Rejected; describe corrective action taken and disposition of non-specification material.
❒ Written notification of rejection forwarded to Prime Contractor.

Inspector: _____ Contractor: by _____

White Copy - Do not detach
Canary Copy - Contractor Foreman

Copies To: Project Engineer
Prime Contractor

DOT Form 422-020X Metric
Revised 5/95

Washington State
Department of Transportation

Water Delivery Record

Contractor / Subcontractor	
Contract No.	Date

Time of Loading Hr. Min.	Quantity	Placed S.B. Lane, Detour, Haul Rd., etc.

Washington State Department of Transportation

Scaleman's Daily Report

Contract No.	Date	Pit No.
Scale Location		
Materials Hauled		
State Scaleman Signature	Contractor's Scaleman Signature	

Morning Tare

Time	Truck No.	Tare	Legal Gross

Afternoon Tare

Time	Truck No.	Tare	Legal Gross

Remarks

Contractor's weighman operated the scales and the state inspector observed ( ) or
weighing operations were performed by the state inspector ( )

Scale Tested By (*Company or Agency)*	Date

The reverse side of this form must be used ***daily*** to document scale checking activity.

DOT Form 422-027
Revised 9/95

Reference: Construction Manual Section 10-2.2C

Everyday use of the following three methods to determine if the scale is operating to within one-half of one percent of the weighed load.

1. Weigh a loaded truck on another sale which as been inspected or certified, then weigh the same truck on your scale.
2. Weigh your vehicle on a certified scale and check your scale with it.
3. If one truck is used for an extended period of time, use it as a "tattle-tale" check. The tare of the truck should be established just after the scale has been certified or checked by methods (1) or (2). When the truck is originally weighed, check the amount of fuel and make the daily check when the amount of fuel is the same, and check to see that the truck is free of mud, etc. This procedure is best utilized during dry weather. When this procedure is used, check the scales by methods (1),or (2) twice weekly.

Use the space below to describe the check method and show the computations for the percent of variance.

In addition, periodic checks must be made throughout each day to see that the scale is balanced and returns to zero. If the scale does not return to zero, check for binding and/or clean the platform.

Time	Results	Time	Results

Abrupt stops by locking and holding brakes will affect the accuracy of the scales as well as large idling engines.

DOT Form 422-027
Revised 5/97

Washington State Department of Transportation

Field Note Record

Contract No.	Station	Line	C/S

Staked By	Date	Work Started	Work Completed

Calculated By	Date	Checked By	Date	Inspector's Signature	Date

Item No.	Material	Manufacturer	Brand Name Model/Type	RAMS/QPL Ref. No.	Appr/Accept Code	Basis of Acceptance

Item No.	Item Description	Group	Date Work Completed	Unit	Quantity	CAPS Entry No.	Posted By		Checked By		Est. No.
							Initials	Date	Initials	Date	

DOT Form 422-635 EF
Revised 3/98

Page No. _____

Contract No. _____

Station	Left	Right	Length or Width	Area	Remarks

Washington State Department of Transportation

FIELD NOTE RECORD (SKETCH GRID)

BOOK NO. _____ PAGE NO. _____

CONTRACT NO.	STATION	LINE	C/S

STAKED BY	DATE	WORK STARTED	WORK COMPLETED

CALCULATED BY	DATE	CHECKED BY	DATE	INSPECTOR'S SIGNATURE	DATE

ITEM NO.	ITEM	GROUP NO.	DATE	UNIT	QUANTITY	RAMS NO.	BASIS OF MATERIAL ACCEPTANCE	CAPS ENTRY NO.	INTIALS		EST. NO.
									POST	CK	

DOT Form 422-636 (Front)
Revised 9/95

DOT 422-536 (Back)
Revised 1/90

Washington State Department of Transportation

FIELD NOTE RECORD FOR DRAINAGE

BOOK NO. _____ PAGE NO. _____

CONTRACT NO.	STATION	LINE	C/S	CODE NO.

STAKED BY	DATE	WORK STARTED	WORK COMPLETED

CALCULATED BY	DATE	CHECKED BY	DATE	INSPECTOR'S SIGNATURE	DATE

ITEM NO.	ITEM	GROUP NO.	DATE	UNIT	QUANTITY	RAMS NO.	BASIS OF MATERIAL ACCEPTANCE	CAPS ENTRY NO.	INTIALS		EST. NO.
									POST	CK	

DOT Form 422-637 (Front)
Revised 9/95

BOOK NO. _____ PAGE NO. _____

STRUCTURE EXCAVATION

(PIPE STRUCTURE EXCAVATION WIDTH =)

STATION	FLOW LINE GRADE	ORIGINAL GROUND	SUB-GRADE	CENTERLINE CUT		OFFSET HUB	OFFSET CUT-F.L.	REMARKS
				FLOW LINE	BOTTOM DITCH			

REMARKS

DOT Form 422-637 (Back)
Revised 9/95

Washington State Department of Transportation

Daily Report of BST Operations

Region	Report No.

Contract No.	Section		Contractor		
Date	Weather	Min/Max Temp.	SR No.	Grade	Class

Application is to a: ☐ New ☐ Old Surface If old is indicated, describe the overall condition of the surface:

Note: List loads of Bituminous Cement for each operation. Where spreads of Bituminous Cement are continuous on same side of road, such loads may be reported as a unit load.

Bituminous Cement Applications

Load Nos.	KP From Sta.	KP to Sta.	Side/ Road	Width in Meters	Area	Hot Liters	Asphalt Temp.	Cold Liters	Yield Asphalt		Yield Aggregate	
									Ordered	Applied	Ordered	Applied

Remarks (Embedment, Rollers, etc.)

Item Quantity Calculations

Item	Location	Quantities Today	Job Total
Preparation of Rdwy.		Kilometers	Kilometers
Asphalt (Grade)		Tonnes	Tonnes
Asphalt (Grade)		Tonnes	Tonnes
Min. Aggr. (Size)		m^3	m^3
Min. Aggr. (Size)		m^3	m^3

Completed Kilometers to Date	Kilometers Today	Total

Superintendent	Foreman
Inspector	Project Engineer

DOT Form 422-644 Metric
Revised 12/95

Washington State Department of Transportation

Correlation - Nuclear Gauge to Core Density

Contract Number	SR Number	Mode ☐ Backscatter ☐ Direct	
Section			
Pit Number	ACP Class	Lift Thickness	Project Engineer

	(1) Station/Offset	(2) Nuclear Gauge Density #/ft^3	(3) Core Density #/ft^3	(4) Density Ratio
1.				
2.				
3.				
4.				
5.				
6.				
7.				
8.				
9.				
10.				

(1) The ten test points can represent either the first two control lots or ten points within the first control lot (Attach the Compaction Control Report).

(2) Nuclear gauge density tests must be taken the day of paving.

(3) Cores must be taken at the same location as the nuclear density readings, the day following paving.

(4) Density Ratio = $\frac{\text{Core Density}}{\text{Nuclear Gauge Density}}$

(5) Calculation of Gauge Correlation Factor (GCF)

Add ten Density Ratios

GCF = $\frac{\text{Sum of Density Ratios}}{10}$ = $\frac{_____}{10}$ = _____

Date of Paving	Date of Coring	Date Project Office Notified of Gauge Correlation Factor

By _____
Signature

DOT Form 350-112 EF
Revised 9/97

Distribution: (White) - Region Materials Lab (Canary) - Project Engineer (Pink) - OSC Materials Lab

Washington State Department of Transportation

Manufacturer's Certificate of Compliance for Ready Mixed Concrete

Manufacturer's Plant			WSDOT Contract Number
Contractor		Date	Time Batched ☐ am ☐ pm
Truck Number	Initial Counter Reading		Quantity
Concrete Class or Design Mix Number	Cement Producer (Brand)	Type	Mill Certificate Number

		Target Mass kg/m³ Agg. Mass at SSD	Actual Mass kg/m³ Include Free Moisture	Moisture %	Actual Mass kg/m³ Agg. Mass at SSD
Cement					
Flyash	Type				
CCA #1	WSDOT or AASHTO Designation				
CCA #2	WSDOT or AASHTO Designation				
FCA	Class 1 or Class 2				
Water	Liters or Kilograms				

Admixtures Used - Brand and Dosage

Admixture	Brand or Type	ml/kg	Total Volume (L) This Batch
Air Entraining			
Water Reducing			
Other			

Signature of Plant Representative

On Site Data

Time Discharged _____ ☐ am ☐ pm Revs at Start of Discharge _____

Water _____ L *1 Liter = 1 kg* Water _____ kg
(Added at Site) (Total Water)

Location Concrete Placed

Test Values

Slump _____ Air _____ Concrete Temp _____ Test Cylinder No. _____

WSDOT Inspector _____

DOT Form 450-001 Metric
Revised 1/96

Washington State Department of Transportation

Commercial Pesticide Application Record

Remember Backflow Protection

Reference (RCW 17.21) A new form shall be filled out each day or time the pesticide tank mixture is modified during the day or each time the Sign Route or County is changed. This Record Must be Retained for 7 Years. This form must be completed on day of application.
WSDOT, Roadside Management Branch, P.O. Box 47358, Olympia, WA 98504-7358. Phone (360) 705-7853.

Contract Number	County	Date of Application	Day of Week	Start ☐ AM ☐ PM Finish ☐ AM ☐ PM

SR	Description of Area Treated	Station to Station

Check Appropriate Boxes

☐ NB ☐ EB ☐ Median ☐ Roadside ☐ Interchange ☐ Spot Spray ☐ Aquatic
☐ SB ☐ WB ☐ Landscaped Area ☐ Rest Area ☐ Bridge ☐ Blanket Spray ☐ Wetlands
☐ Shoulder ☐ Park-n-Ride ☐ Ramp ☐ Banded Width

☐ Weeds ☐ Noxious Weeds ☐ Disease ☐ Seed
☐ Brush ☐ Insects ☐ Other List Pest(s):

Temperature _____ °F(°C) Wind (Direction From) _____ Wind (Range) _____ mph(km/h)
☐ Sunny ☐ Broken ☐ Overcast, No Rain ☐ Light, Scattered Showers ☐ Hard Showers

Material Name	Manufacturer	EPA Reg. No.	Lot Number	Product Per Acre (hectare)	Active Ingredient per Acre(hectare)	Unit	Amount Per Tank	Total Daily Usage	Unit
	Oil (As Carrier)	Units: Ozd= Ounces Dry Lb= Pound g= gram kg=kilogram Ozl= Ounces Liquid Ga= Gallon ml=Milliliter L= Liter Pt= Pint Qt= Quart							
	Water Source								

No. of Tanks per Day _____ Tank Size _____ Gallons(liters).

Total _____ Acres(hectares) Treated at _____ gallons(liters) of spray per acre(hectare).

Equipment Information	Apparatus Number	Calibration Date	Vehicle Speed mph(km/h)	☐ Boom ☐ Other (Specify)

☐ Handspreader ☐ Belly Grinder ☐ Backpack	☐ Handgun ☐ Manifold ☐ Fixed Nozzle ☐ Nozzle Cluster	☐ Tank Mix (Conv.) ☐ Invert ☐ Injection

Nozzle Information	Model Number	Pressure PSI(kPa)	Number of Nozzles	Width of Spray Pattern Feet(meter)

Business Name	Phone

Address	City	State	Zip Code

Applicator /Operator Name	Commercial Pesticide Lic. No.	Commercial Operator Signature

Prime Contactor	Subcontractor	Inspector Name	Phone

Remarks

Pesticide Sensitivity Registration Applies: ☐ Yes ☐ No

Contacts

Division of Emergency Management (1-800-258-5990)

DOT Form 540-509 EF
Revised 3/96

Distribution: Operator Project Engineer OSC Maint.
Send OSCCopy Within 5 Days

VERBAL APPROVAL

DATE: _____ **CONTRACT:** _____

REQUEST BY: _____

APPROVED BY: _____

FHWA: PERSON NOTIFIED _____

DATE: _____ **REMARKS:**

DOT FORM 410-001
REVISED 8/78

Washington State Department of Transportation

Examination Sheet For Contract Items

Item No.	Description	Unit	Price/Unit

Plan Quantity	Present Quantity	Final Quatity	Added Item	C.O. No.

Quantities Examined

Entry #	Date	Location	Grp. #	Est. #	Recorded Qty	Examined Qty	Source
				Total	_____	_____ %	

Documentation Practices Examined

- ☐
- ☐
- ☐
- ☐
- ☐
- ☐
- ☐
- ☐
- ☐
- ☐ _____
- ☐
- ☐
- ☐ _____
- ☐ _____
- ☐ _____

Type of Supporting Records Examined

- ☐
- ☐
- ☐
- ☐
- ☐
- ☐
- ☐
- ☐
- ☐
- ☐
- ☐
- ☐
- ☐ _____
- ☐ _____
- ☐ _____

Review Results

The examination shows this item was measured in accordance with the Contract and the Standard Specifications. _____

The documentation practices were in accordance with the requirements of the Construction Manual. _____

Comments and Recommendations

Project Engineer _____ Examiner _____ Date _____

DOT Form 421-014 EF
Revised 1/97

RECAPITULATION OF FINAL CONTRACT EXAMINATION

Washington State Department of Transportation

Contract No. _____ F. A. Project No. _____

Project Description: _____

_____

Project Engineer: _____ Examiner: _____

Dates of Examination: _____

_____

ITEM NO.	DESCRIPTION	% EXAMINED

+ Item(s) requires Project Engineer's Comment.

See attached Examination Sheets for details on Pay Items.

Date Project Completed _____ Date Final Estimate Sent to Accounting _____.

DOT FORM 421-015(X) REVISED 2/78

Washington State Department of Transportation

Yield and Cement Content

		°C			%
Ticket Number	Plant	Mix Number	Truck Number	Batch Size (BS) m^3	Cylinder Number

Date	Contract Number	Class Concrete	Design Air (DA) %	Min. Cement Content (MCC) kg/m^3	Air Temperature °C

Use Actual Batch Weights Per Truckload

Cement Weight	**[A]**		kg
Fly Ash Weight			kg
Total Cementitous Material	**[B]**		kg
Fine Aggregate	**[C]**		kg
Coarse Aggregate 1			kg
Coarse Aggregate 2			kg
Coarse Aggregate 3			kg
Total Coarse Aggregate	**[D]**		kg
Plant Mix Water			kg
Water Added	Liters X 1 kg/L =		kg
Total Water	**[E]**		kg
Total Weight	**(B+C+D+E) = [F]**		kg

Unit Weight

Yield Bucket Volume	**[G]**		m^3
Gross Weight			kg
Tare Weight			kg
Net Weight	**(Gross Weight - Tare Weight) = [H]**		kg
Unit Weight	**(H / G) = [I]**		kg/m^3

Air Correction

If concrete does not contain an air-entraining agent, then skip Air Correction.

Design Air Correction	**100 - [DA] = [J]**	
Test Air Correction	**100 - [TA] = [K]**	
Air Correction Total	**({J / K} X [I]) = [L]**	

Actual Yield

*If concrete does not contain an air-entraining agent, then [L] = [I].

[F] _____ **/ [L*]** _____ **= [M]** _____ m^3

Calculated Cement Content

[B] _____ **/ [M]** _____ **= [CCC]** _____ kg/m^3

If Calculated Cement Content is 5 kilograms per cubic meter less than the Minimum Cement Content [MCC], then an adjustment in the Aggregate Batch Weights is needed. (See Adjusted Concrete Mix Design).

Calculated By _____

DOT Form 350-566 Metric EF
Revised 4/96

Washington State Department of Transportation

Adjusted Concrete Mix Design

To Contractor _____

The following Contracting Agency Mix Design is to be adjusted as follows:

Approved Mix Design			Adjusted Mix Design		
Designated Mix Design Number			Designated Mix Design Number		
Cement					
Type I		kg/m^3	Type I		kg/m^3
Type II		kg/m^3	Type II		kg/m^3
Other		kg/m^3	Other		kg/m^3
Fly Ash		kg/m^3			kg/m^3
Fine Aggregate					
Pit Number			Pit Number		
Class I		kg/m^3	Class I		kg/m^3
Class II		kg/m^3	Class II		kg/m^3
Coarse Aggregate					
Pit Number			Pit Number		
WSDOT No. 2		kg/m^3	WSDOT No. 2		kg/m^3
WSDOT No. 4		kg/m^3	WSDOT No. 4		kg/m^3
WSDOT No. 5		kg/m^3	WSDOT No. 5		kg/m^3
WSDOT No. 6		kg/m^3	WSDOT No. 6		kg/m^3
AASHTO No. 8		kg/m^3	AASHTO No. 8		kg/m^3
Water (Maximum)		kg/m^3	Water (Maximum)		kg/m^3
Water / Cement Ratio			Water / Cement Ratio		
Water Reducer		ml/m^3	Water Reducer		ml/m^3
Water Reducer/Retarder		ml/m^3	Water Reducer/Retarder		ml/m^3
High-Range Water Reducer		ml/m^3	High-Range Water Reducer		ml/m^3
Air Entrainment		ml/m^3	Air Entrainment		ml/m^3

Adjusted Average Cement Content

_____ kg/m^3 + _____ kg/m^3 = _____ / 2 = [P] _____ kg/m^3

Calculated Cement Content — Calculated Cement Content — Average Calculated Cement Content

Aggregate Correction

[P] _____ kg/m^3 / [MCC] _____ kg/m^3 = [Q] _____

Fine Aggregates		kg X [Q] =		kg
Coarse Aggregate		kg X [Q] =		kg
Coarse Aggregate		kg X [Q] =		kg
Coarse Aggregate		kg X [Q] =		kg

Contractor's Signature _____ Date _____

Project Engineer's Signature _____ Date _____

DOT Form 350-568 Metric EF 4/96 Distribution: Original - Contractor Copy - Project Engineer

Washington State Department of Transportation

Initial Documentation Review (Procedures)

Review Date	Contract Amount $	Start Date	Reviewed By
Project Engineer		% Complete	Federal Aid Number

Preconstruction Information (1-2.1C)	Yes	No
Checklist completed & filed	☐	☐
Davis-Bacon Statement (Federal)	☐	☐
Safety Stds. Questionnaire (1-2.2l(3))	☐	☐
Job Site Posters noted (1-2.2k)	☐	☐
Traffic Control (1-2.3)		
Contractor Letter adopting TCP	☐	☐
Contractor Letter designating TCM/TCS	☐	☐
DOT TCS identified	☐	☐
Force Account (1-2.4D)		
FA Sheet signed by Inspector & Contractor	☐	☐
Equipment Rates correct	☐	☐
Labor Rates correct and documented	☐	☐
OH & P correct	☐	☐
Supplemental markup correct (Sub items)	☐	☐
Progress Schedule (1-2.5A)		
Approved by Project Engineer	☐	☐
Project on Schedule	☐	☐
Emplyee Interviews (1-2.6C(1)) Federal Projects		
On file for Prime Contractor	☐	☐
On file for all Subcontractors over 30%	☐	☐
Statement of Intent to Pay Prevailing Wages (1-2.6B)		
On file for Prime Contractor	☐	☐
Received before first estimate payment	☐	☐
Payroll Review (1-2.6C) (Prime and All Subs)		
First payrolls checked and initialed	☐	☐
All other payrolls checked 10%	☐	☐
Check for the following items		
Contract #, Payroll #, Payroll period	☐	☐
Labor classification correct	☐	☐
Minimum Wage met or exceeded	☐	☐
Overtime shown separately	☐	☐
Travel Pay shown separately	☐	☐
Proof of apprentice registration	☐	☐
Employees address and SSN shown	☐	☐
Fringe benefits Paid	☐	☐
Compliance statement signed	☐	☐

Diary Records (10-3.5)	Yes	No
Project Diary current and signed	☐	☐
IDR's complete	☐	☐
Training (1-2.7B)		
Training program submitted before first estimate	☐	☐
Program approved	☐	☐
Program outline follows requirements	☐	☐
Trainees submitted for approval	☐	☐
"Good Faith Effort" documentation provided if non protected person approved.	☐	☐
Sublets (1-2.4G)		
Sublets approved before working	☐	☐
Monthly Employment Utilization Report DOT Form 820-010 (1-2.7A(3))		
Received monthly from prime and sub	☐	☐
Reviewed by project office	☐	☐
Change Orders (1-2.4C)		
Approved before work starts	☐	☐
M/W/DBE On-Site Reviews (1-2.4H)		
Condition of award M/W/DBE subs on job yet	☐	☐
Reviews made and submitted to OEO	☐	☐
Project Ledger (10-3.9)		
Entries reference source documents	☐	☐
Item Checks (Procedures)		
Item Quantity Tickets	☐	☐
Scaleman's Daily Report	☐	☐
Scale Certification	☐	☐
Truck Measure	☐	☐
Concrete Plant Daily Report	☐	☐
Delivery Tickets	☐	☐
Other	☐	☐
Materials (Chapter 9)		
Record of materials current	☐	☐
Approval of source before use	☐	☐
Certification of origin before use	☐	☐
Certification of American made steel	☐	☐

Remarks (Use back for additional remarks)

DOT Form 230-036A EF
Revised 1/97

Washington State Department of Transportation

Follow-Up Documentation Review

Contract Number	Contract Title		
Review Date	Contract Amount $	Start Date	Reviewed By
Project Engineer		% Complete	Federal Aid Number

Traffic Control (1-2.3)	Yes	No
TCS reports in project files	☐	☐
Force Account (1-2.4D)		
FA Sheet signed by Inspector & Contractor	☐	☐
Equipment Rates correct	☐	☐
Labor Rates correct and documented	☐	☐
OH & P correct	☐	☐
Supplemental markup correct (Sub items)	☐	☐
Progress Schedule (1-2.5A)		
Approved by Project Engineer	☐	☐
Project on Schedule	☐	☐
Employee Interviews (1-2.6C(1)) Federal Projects		
On file for Prime Contractor	☐	☐
On file for all Subcontractors over 30%	☐	☐
Payroll Review (1-2.6C) (Prime and All Subs)		
First payrolls checked and initialed	☐	☐
All other payrolls checked 10%	☐	☐
Check for the following items		
Contract #, Payroll #, Payroll period	☐	☐
Labor classification correct	☐	☐
Minimum Wage met or exceeded	☐	☐
Overtime shown separately	☐	☐
Travel Pay shown separately	☐	☐
Proof of apprentice registration	☐	☐
Employees address and SSN shown	☐	☐
Fringe benefits Paid	☐	☐
Compliance statement signed	☐	☐
Diary Records (10-3.5)		
Project Diary current and signed	☐	☐
IDR's complete	☐	☐
Sublets (1-2.4G)		
Sublets approved before working	☐	☐
Monthly Employment Utilization Report DOT Form 820-010 (1-2.7A(3))		
Received monthly from prime and sub	☐	☐
Reviewed by project office	☐	☐
Change Orders (1-2.4C)		
Approved before work starts	☐	☐
M/W/DBE On-Site Reviews (1-2.4H)		
Condition of award M/W/DBE subs on job yet	☐	☐
Reviews made and submitted to OEO	☐	☐

Item Checks (Procedures)	Yes	No
Item ____ Description _____		
Ledger vs source document	☐	☐
Field Note Record complete	☐	☐
Item Quantity Tickets complete	☐	☐
Scale Cert. Scaleman's Daily Rpt. Wghmstr Lic.	☐	☐
Work noted on Inspector's Daily Report	☐	☐
Material Source Approved	☐	☐
Material Acceptance Documentation	☐	☐
Item ____ Description _____		
Ledger vs source document	☐	☐
Field Note Record complete	☐	☐
Item Quantity Tickets complete	☐	☐
Scale Cert. Scaleman's Daily Rpt. Wghmstr Lic.	☐	☐
Work noted on Inspector's Daily Report	☐	☐
Material Source Approved	☐	☐
Material Acceptance Documentation	☐	☐
Item ____ Description _____		
Ledger vs source document	☐	☐
Field Note Record complete	☐	☐
Item Quantity Tickets complete	☐	☐
Scale Cert. Scaleman's Daily Rpt. Wghmstr Lic.	☐	☐
Work noted on Inspector's Daily Report	☐	☐
Material Source Approved	☐	☐
Material Acceptance Documentation	☐	☐
Item ____ Description _____		
Ledger vs source document	☐	☐
Field Note Record complete	☐	☐
Item Quantity Tickets complete	☐	☐
Scale Cert. Scaleman's Daily Rpt. Wghmstr Lic.	☐	☐
Work noted on Inspector's Daily Report	☐	☐
Material Source Approved	☐	☐
Material Acceptance Documentation	☐	☐

Remarks (Use back for additional remarks)

DOT Form 230-036B EF
Revised 1/97

FEDERAL-AID HIGHWAY CONSTRUCTION

SUMMARY OF EMPLOYMENT DATA (INCLUDING MINORITY BREAKDOWN)
FOR ALL FEDERAL-AID PROJECTS FOR MONTH ENDING JULY 31st, 19_____

NOTE: See Instruction on Reverse

OMB NO. 2125-0019

STATE-REGION (5-8)	NUMBER OF PROJECTS (9-12)	TOTAL DOLLAR VALUE (13-23)
01		

EMPLOYMENT DATA

Table A

JOB CATEGORIES	TOTAL EMPLOYEES		TOTAL MINORITIES		BLACK *Not of Hispanic Origin*		HISPANIC		AMERICAN INDIAN OR ALASKAN NATIVE		ASIAN OR PACIFIC ISLANDER		WHITE *Not of Hispanic Origin*		APPRENTICES		ON THE JOB TRAINEES	
	9-13	14-18	19-23	24-28	29-33	34-38	39-43	44-48	49-53	54-58	59-63	64-68	69-73	74-78	79-83	84-88	89-93	94-98
	M	F	M	F	M	F	M	F	M	F	M	F	M	F	M	F	M	F
02 OFFICIALS *(Managers)*																		
03 SUPERVISORS																		
04 FOREMEN / WOMEN																		
05 CLERICAL																		
06 EQUIPMENT OPERATORS																		
07 MECHANICS																		
08 TRUCK DRIVERS																		
09 IRONWORKERS																		
10 CARPENTERS																		
11 CEMENT MASONS																		
12 ELECTRICIANS																		
13 PIPEFITTERS, PLUMBERS																		
14 PAINTERS																		
15 LABORERS, SEMI-SKILLED																		
16 LABORERS, UNSKILLED																		
17 **TOTAL**																		

Table B

18 APPRENTICES																		
19 ON THE JOB TRAINEES																		

11. PREPARED BY: *(Signature and Title)*	DATE	REVIEWED BY: *(Signature and Title of State Highway Official)*	DATE

This report is required by law and regulatic:. (23 U.S.C. 140a and 23 CFR Part 230). Failure to report will result in noncompliance with this regulation.

Form FHWA-1392 (Rev. 3-92) PREVIOUS EDITIONS ARE OBSOLETE 50625—M-Form1

This form is to be developed from the "Contractor's Annual EEO Report." The data is to be compiled by the State and submitted annually. It should reflect the total employment of all Federal-Aid Highway Projects in the State as of July 31st. The staffing figures to be reported should represent the project work force on board in all or any part of the last payroll period preceding the end of July. The staffing figures to be reported in Table A should include journey-level men and women, apprentices, and on-the-job trainees. Staffing figures to be reported in Table B should include only appentices and on-the-job trainees as indicated.

Entires made for "Job Categories" are to be confined to the listing shown. Miscellaneous job classifications are to be incorporated in the most appropriate category listed on the form. All employees on projects should thus be accounted for.

This information will be useful in complying with the U.S. Senate Committee on Public Works request that the Federal Highway Administration submit a report annually on the status of the Equal Employment Opportunity Program, its effectiveness, and progress made by the States and the Administration in carrying out Section 22(A) of the Federal-Aid Highway Act of 1968. In addition, the form should be used as a valuable tool for States to evaluate their own programs for ensuring equal opportunity.

It is requested that States submit this information annually to the FHWA Divisions no later than September 25.

LINE 01.—State and Region Code. Enter the 4-digit code from the list below.

Alabama	01-04	Montana	30-08
Alaska	02-10	Nebraska	31-07
Arizona	04-09	Nevada	32-09
Arkansas	05-06	New Hampshire	33-01
California	06-09	New Jersey	34-01
Colorado	08-08	New Mexico	35-06
Connecticut	09-01	New York	36-01
Delaware	10-03	North Carolina	37-04
District of Columbia	11-03	North Dakota	38-08
Florida	12-04	Ohio	39-05
Georgia	13-04	Oklahoma	40-06
Hawaii	15-09	Oregon	41-10
Idaho	16-10	Pennsylvania	42-03
Illinois	17-05	Puerto Rico	43-01
Indiana	18-05	Rhode Island	44-01
Iowa	19-07	South Carolina	45-04
Kansas	20-07	South Dakota	46-08
Kentucky	21-04	Tennessee	47-04
Louisiana	22-06	Texas	48-06
Maine	23-01	Utah	49-08
Maryland	24-03	Vermont	50-01
Massachusetts	25-01	Virginia	51-03
Michigan	26-05	Washington	53-10
Minnesota	27-05	West Virginia	54-03
Mississippi	28-04	Wisconsin	55-05
Missouri	29-07	Wyoming	56-08

50525,1—M-Form1

* U.S Government Printing Office1992- 312-673/62902

Washington State
Department of Transportation

Fabrication Progress Report

Report No.	Date
Contract No.	Contractor
Fabricator	Location
Shop Job No.	Period

Contract Item No.			
Girders Series			
Contract Quantity			
Girders in Fabrication			
Girders Fabricated This Period*			
Total Fabricated to Date			
Total Finished and Ready to Ship			
Shipped Previously			
Shipped During This Period			
Total Shipped to Date			

Remarks

*Girder Number	Date Poured	Camber	*Girder Number	Date Poured	Camber

cc: Project Engineer
File

Note: This report will be made out each Thursday and distributed to reach the Project Engineer on the following Monday.

State Inspector

DOT Form 350-004
Revised 1/96

APPROVED FOR SHIPMENT

_____ Date _____

Inspector, Washington State Department of Transportation

MM/DD/YR

DOT FORM 350-021
REVISED 4/96

Washington State Department of Transportation

Prestress Pile Record

Highway No. _____ Section _____

Contract No. _____ Report No. _____ Outside Diameter _____ Wall Thickness _____

Pre-Tension Cables: Lot No. _____ Reel No. _____ Straight Cables: No. _____ Size _____

Elongation: Calculated _____ Measured _____ Straight Jacking Force _____ N/Cable _____ Total Newtons

Pile No.	Cast Length	Date Pour	Begin Pour	End Pour	Air Temp	Conc. Temp.	Slump (mm)	Avg. Temp. Curing	Hours of Cure		Cyl. Nos.	Test Bge.	MPa	Destress Date/Time	Finished Length
									Accel.	Water					

Remarks

_____

_____

_____

_____

Distribution: White - Materials (Record)
Canary - Bridge Engineer (Memo)
Pink - Region Oper. Engineer (Memo)
Goldenrod - Retain (Memo)

Inspector _____ Date _____

DOT Form 350-086 Metric 9/95

Washington State Department of Transportation

Prestressed Concrete Girder Report No. _____

Contract No.	F.A. No.	S.R.	Concrete Mix	Aggregate Source

Section	% Sand Passing 1.18 mm	% Gravel Passing 19.0 mm

Bridge Name	Contractor	Cement Brand	Type	SKS./m^3	Water L/SK

Ft. Series _____

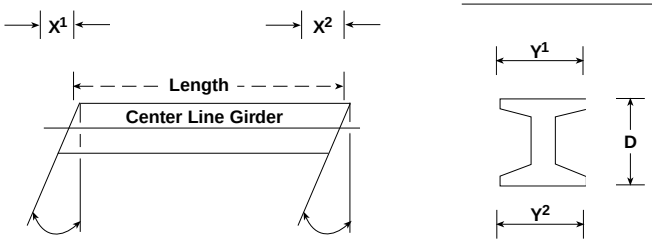

Pretension Cables:

Lab. No.(s)

Strght. Cable No. Size HRPD. Cables No. Size

Strght. Jack Force N/Cable Newtons Total

Elongation Calculated Measured

Hrpd. Jack Force N/Cable Newtons Total

Elongation Calculated Measured

Pre-tension Release Date Time

Specified Release MPa:

Specified Design MPa:

Girder No.	Date Poured	Pour Time Begin	Pour Time End	Air Temp.	Conc. Temp.	Slump	Curing Hr. Steam	Curing Avg. Temp.	Cyl. No.	Date Tested	Age Hrs.	MPa	* Camber	Finished Length	Remarks

Remarks _____

Project Engineer

Field Inspector

Date

*Camber at center of girder.

DOT Form 450-002 M
Revised 12/95

Distribution: White — Materials Lab Canary — Field Inspector

Washington State
Department of Transportation

CONTRACT NO.	PAGE NO.
SECTION	
STRUCTURE	
PROJECT ENGINEER	INSPECTOR

Post-Tensioning Record

Date	Gir. No.	Tendon No.	Jack No.	Jack Location	Req 'd. Jacking Force Per Tendon (kN)	Strands Per Tendon	Gauge @ 20% Jacking Force (MPa)	Gauge @ Req'd. Jacking Force (MPa)	Gauge @ Actual Jacking Force (MPa)	Actual Elong. (mm)	(A) 100% Actual Elong. -20% Actual Elong. (mm)	(B) Calc. 80% Elong. (mm)	% Elong. Per Tendon	100% Actual Elong. -Seated Elong. (mm) = (c)	(c) -Jack Elong. = Seating Take-up (mm)	Req'd. Seating Take-up (mm)

DOT Form 450-005 Met
Revised 1/97

Distribution: Final Records
Olympia Service Center Construction

Note: % Elong. = The sum of columns "A" for both ends of the tendon divided by the sum of columns "B" for both ends of the tendon X 100.
% Elong. shall be between 93% minimum and 107% maximum.

Washington State Department of Transportation

IDR Sheet	of	Sheets	Final Record Book	Page
Contract	SR Nos.		Day	Date

Weather (See Instructions) AM PM

Prime Contractor	Representative / Title
A.	

Subcontractor or Agent	Appr'd	D/M/WBE	Representative / Title
B.			
C.			
D.			
E.			

Contractor's Work Activity

Description and Location

Contractor's Equipment

Operating Contractor's ID (A-E, see above)

	No.	Equipment - ID No. and Description	Opr	Stdby	Down	Idle

Contractor's Workforce

Operating Contractor's ID (A-E, see above)

	Number / Hours								Number			
	Laborers	Carpenters	Operators	Teamsters	Ironworkers	Masons	Flaggers	Electricians	Male	Fmale	Appr	Trnee
	/	/	/	/	/	/	/	/				
	/	/	/	/	/	/	/	/				
	/	/	/	/	/	/	/	/				
	/	/	/	/	/	/	/	/				
	/	/	/	/	/	/	/	/				

Item, Description, and Location of Work (NOTE: Any "NO" is to be explained in Diary)

Item No.	Contract Item Description	Location	Required Backup Samples Taken Y/N	Matls Documentation Approved Y/N	Matls Source Approved Y/N	Pay Note Made Y/N

Traffic Control

Was Class B Traffic Control Labor Required Today? ☐ ☐

Was TCS on Project Site Today? ☐ ☐

Photos / Videos taken Today? ☐ ☐

Inspector's Shift Hours From / To

(Signed) Inspector

Reviewed By

DOT Form 422-004 EF
Revised 4/97

Washington State
Department of Transportation

Inspector's Daily Report

IDR Sheet of Sheets	Final Record Book Page	
Contract	Day S M T W T F S	Date

DIARY — Including but not limited to: a report of the day's operations, time log (if applicable), orders given and received, discussions with contractor, and any applicable statements for the monthly estimate.

DOT Form 422-004A
Revised 12/92

(Signed) Inspector

Washington State Department of Transportation

(Street) Inspector's Daily Report

IDR Sheet 2 of Sheets	Final Record Book	Page
Contract	Day S M T W T F S	Date

DIARY - Including but not limited to: a report of the day's operations, time log (if applicable), orders given and received, discussions with contractor, and any applicable statements for the monthly estimate.

Surface Temp. Min: Max:	Air Temp. Min: Max:	Paver Speed (meters per minute) Min: Max:	Pneumatic Roller Tire Pressure:
From Station	To Station	m^2	Tonnes of Mix

	Base	Leveling	Wearing	Area m^2	Avg. Mass/m^2	Tack Coat
Daily Total						
Previous Total						
Total To Date						
Plan Quantity						

DOT Form 422-004B 4/96

Signed Inspector

Washington State
Department of Transportation

Contractor's Construction Process Evaluation

CONTRACT NO:	**CONTRACT TITLE:**	
TYPE OF WORK:		**CONTRACT AMOUNT:**
CONTRACTOR:	**PROJECT ENGINEER:**	**DISTRICT:**

A. PLANS AND SPECIFICATIONS

	POOR (1)	MARGINAL (2)	SATISFACTORY (3)	GOOD (4)	EXCELLENT (5)
1. Accuracy					
2. Completeness					
3. Clarity					
4. Organization					
5. Match with Field Conditions					

6. Comments and Examples: _____

7. Suggestions for Improving the Plans and Specifications: _____

8. Suggestions for Improving Methods of Measurement and Payment: _____

B. MANAGEMENT AND ADMINISTRATION

	POOR (1)	MARGINAL (2)	SATISFACTORY (3)	GOOD (4)	EXCELLENT (5)
1. Coordination and Cooperation					
2. Anticipation of Problems					
3. Timely Decision-Making					
4. Availability of Project Engineer					
5. Willingness to Resolve Difficult Issues					
6. Accuracy of Progress Payments					
7. Timeliness of Progress Payments					

8. Comments and Examples: _____

9. Suggestions for Improvement: _____

C. INSPECTION AND SURVEYING

	POOR (1)	MARGINAL (2)	SATISFACTORY (3)	GOOD (4)	EXCELLENT (5)
1. Effectiveness of On-Site Supervision					
2. Knowledge and Training of Inspectors					
3. Objectivity and Fairness of Inspectors					
4. Timeliness of Inspection and Surveying					
5. Accuracy and Sufficiency of Surveying					
6. Timeliness of Sampling and Test Results					
7. Accuracy of Sampling and Testing					
8. Attitude Toward Public Safety and Traffic Control					

9. Comments: _____

DOT 410-029 (sheet 1)
Revised 8/92

D. APPROVALS

PLEASE CHECK WHETHER APPROVALS OF THE FOLLOWING WERE A PROBLEM ON THIS PROJECT.

	YES	NO
1. Change Orders		
2. Shop Drawings		
3. Falsework, Formwork, and Shoring Drawings		
4. Material Sources		
5. Preliminary Material Samples		
6. Mix Designs		
7. Progress Schedule		
8. Traffic Control Plans		

9. Description of Problems Indicated Above: _____

10. Suggestions for Modifying Approval Processes: _____

E. CONSTRUCTIBILITY

PLEASE CHECK WHETHER ANY OF THE FOLLOWING WERE A PROBLEM ON THIS PROJECT.

	YES	NO
1. Time Restrictions		
2. Weather Limitations		
3. Traffic Restrictions		
4. Size or Length of Project		
5. Order or Staging of Work		
6. Availability and Accessibility of Staging Areas		
7. Utility and Other Third Party Involvement		

8. Description of Problems Indicated Above: _____

9. Modifications that the State could have made prior to contract that would have resulted in significant cost savings: _____

SIGNATURE OF CONTRACTOR'S REPRESENTATIVE DATE

DOT 410-029 (sheet 2)
Revised 8/92

WHITE – CHIEF CONSTRUCTION ENGINEER CANARY – DISTRICT PINK – CONTRACTOR

Washington State Department of Transportation

Inspection of Federal-Aid Projects

Washington Division	Report Number	Date of Inspection	Federal-Aid No.
Cont. No.	Project Title		

Type of Inspection	Inspected By	Quality of Work	Progress of Work	Time Elapsed	Work Completed
☐ Interim ☐ Final	☐ Region ☐ Construction Office	☐ Satisfactory ☐ Unsatisfactory	☐ Satisfactory ☐ Unsatisfactory	%	%

Inspection Made By	In Company With

Remarks:

DOT Form 422-100
10/94

Washington State Department of Transportation

Final Acceptance of Federal-Aid Interstate Projects

Washington Division	Cont. No.	Federal-aid No.	Date of Final Inspection Report
Date Contract Started		Date Contract Completed	Acceptance by Contracting Agency
Project Title			
Scope of Project			

Note: FHWA 47 ☐ Submitted ☐ Not Required

There is compliance with seciton 1.23 of the Regulations pertaining to encroachments on the right-of-way.

Remarks: Procedures and controls were sufficient to assure that this project has been completed in conformance with the approved plans and specifications including authorized changes and extra work.

I recommend that project closing procedures be implemented.		Accepted by:	
Signature		Signature	
Title	Date	Title	Date

DOT Form 422-101
10/94

Pile Book

Book Number _____

Contract Number _____

Contract Title _____

Structure _____

Washington State
Department of Transportation

DOT Form 450-004X Metric
12/95

Contract Number	Pile Number
Structure	Date Driven
Location	Cut Off Elevation
Type Hammer	Ground Elevation
Leads	Final Tip Elevation
Type Pile	Length in Lead
Pile Size	Cut Off
Date Pile Inspected	Pay Length

Jet Drill	Drive Tip Elev.	"C"	Blows/ 300 mm	Brng Tonnes	Time	Remarks
						Inspected

Washington State
Department of Transportation

Monthly Progress Sampling & Inspection Report

Sheet No. _____ of _____

Month _____, 19____

District No. _____

Cont. _____ SR ____ _____ Proj. Engr. _____

DATE	TYPE OF INSPECTION AND LOCATION	PROG. SPLE. NO.	REMARKS

DISTRIBUTION:
Hqs. Mat'ls. Laboratory
Dist. Oper. Engr.
Proj. Engr.

Dist. Soils Engr. _____

Progress Inspector _____

DOT 350-054
Revised 8/92 Frame

Washington State Department of Transportation

M / D / WBE On-Site Review

	Federal Aid #
Prime Contractor	Contract #
Subcontractor	District
Project Engineer	☐ MBE ☐ DBE ☐ WBE

1. Per the condition of award, indicate M/D/WBE work observed this date (note partial items).

Bid Item No.	Approximate % Complete	Item Description (Note partial items)	Dollar Amount

2. M/D/WBE Subcontractor's Start Date | 3. WSDOT Contract Percent Complete | 4. Anticipated Completion Date

5. Subcontractor's ☐ Site Superintendent ☐ Foreman (Name) | 6. Exclusively Employed by the M/D/WBE Contractor ☐ Yes ☐ No

6a. If No, Please Explain

7. Is Superintendent/Foreman Shown on M/D/WBE's Payroll? ☐ Yes ☐ No | 8. Is Superintendent/Foreman Shown on any other On-Site Contractor's Payroll? ☐ Yes ☐ No

8a. If Yes, Please Explain

9. If known to whom does the M/D/WBE's Superintendent/Foreman directly report to within his/her own organization?
Name Title

10. List Names of M/D/WBE's Crew as Observed. Indicate the Craft (Use additional sheets, if needed)

11. Are any Crew Members on the Prime or any Other Project Subcontractor's Payroll(s)? ☐ Yes ☐ No | 11a. If Yes, Please Indicate

12. List M/D/WBE's Major (Self-Propelled) Equipment Used

13. Does Equipment have M/D/WBE's Markings or Emblems? ☐ Yes ☐ No | 13a. If No Please Indicate

14. Equipment ☐ Owned ☐ Leased From | 15. Has any Other Contractor Performed, on behalf of M/D/WBE, Substantial Amount of Work Designated to the M/D/WBE? ☐ Yes ☐ No

15a. If Yes, Please Explain

16. Has the Minority/Woman Owner been Present on the Job Site? ☐ Yes ☐ No What % _____ | 17. Are Personnel and Equipment Under Direct Supervision of the M/D/WBE Subcontractor? ☐ Yes ☐ No

18. Does the M/D/WBE Subcontractor Appear to have Control over Methods of Work on its Items? ☐ Yes ☐ No

Comments

Note: Attach any Documents pertinent to the review, i.e., Invoices, Photographs, Daily Reports, Correspondence, etc.

Review Conducted By _____ Date of This Review _____

DOT Form 272-051
Revised 8/93

Distribution: White - Project Engineer, Pink - District EEO Officer, Canary - Headquarters EEO Office, Goldenrod - OMWBE

Washington State
Department of Transportation

Proposed Mix Design

Structural Concrete: Section 6-02

From Contractor: _____ by (signature) _____

To WSDOT Project Engineer: _____

The following mix design is proposed for use on:

Contract No: _____ Contract Name: _____

for concrete Class: ❒ 20 ❒ 28 ❒ 28P* ❒ 28D* (check one only)

To be used in Bid Items: _____ It is proposed for supply from: _____ (supplier) _____ (plant location) and for use under (Section 6-02.3(2)A Contractor Provided Mix Design) (Section 6-02.3(2)C Contracting Agency Provided Mix Design).

Designated Mix Design No: ( ) ( )

	Contractor Provided Mix Design Spec. Ref. 6-02.3(2)A	State Provided Mix Design Spec. Ref. 6-02.3(2)C
Cement	Type II _____ kg/cu m Type I P(MS) _____ kg/cu m	Type II _____ kg/cu m *Type I P(MS) _____ kg/cu m
Fly Ash	_____ kg/cu m	*_____ kg/cu m
Microsilica	_____ kg/cu m	*_____ kg/cu m
Fine Aggregate	Pit Number: _____ Class 1 _____ kg/cu m Class 2 _____ kg/cu m	Pit Number: _____ Class 1 _____ kg/cu m
Coarse Aggregate	Pit Number: _____ (ssd) kg/cu m WSDOT No. 2: _____ WSDOT No. 4: _____ WSDOT No. 5: _____ WSDOT No. 6: _____ AASHTO No. 467: _____ AASHTO No. 57: _____ AASHTO No. 67: _____ AASHTO No. 7: _____ AASHTO No. 8: _____	Pit Number: _____ (ssd) kg/cu m WSDOT No. 2: _____ WSDOT No. 4: _____ WSDOT No. 5: _____ WSDOT No. 6: _____
Water (Max)	_____ kg/cu m	_____ kg/cu m
Water Cement Ratio	_____ Max	_____ Max
Water Reducer	_____ ml/kg	_____ ml/kg
High-Range Water Reducer	_____ ml/kg	_____ ml/kg
Air Entrainment	_____ ml/kg	_____ ml/kg

Project acceptance is based on certified conformance to the proportions listed, conformance to contract required properties, and subject to provisions for required compressive strength.

*State provided Class 28P and 28D mixes.

Reviewed by: PE Signature: _____ Date: _____

Mix Design Average 28-day Compressive Strength _____ kPa. Attach Laboratory Test Reports.

Comments:

DOT Form 350-040 Metric
Revised 4/96

Distribution: Original to Contractor OSC Materials Region Materials Project Inspector

Washington State Department of Transportation

Contract Materials Checklist

Contract Number	SR	Federal Aid Number
Project Title		

	Yes	No*	N/A	Item(s)
1. All items on ROM have approved sources, including items added by C.O.		**		
2. Approved sources were used for all items and source used is documented.		**		
3. Use of approved proprietary products and QPL items is documented.				
4. Change of Source letters were initiated when required (see 3-1.7 Constr. Manual).				
5. Acceptance Sample testing frequency is adequate with final quantities considered.		**		
6. Assurance and verification of sample testing frequency is adequate with final quantities considered.				
7. Acceptance Sample Test results produced satisfactory correlation with assurance test results.		***		
8. Acceptance sample test results produced satisfactory correlation with IAS test results.		***		
9. All independent Assurance Samples are on file.				
10. Justification is provided for all material which was accepted and incorporated into the project but which failed to meet specifications when tested.		**		
11. Was credit received for any non specification material used?		**		
12. All required approved catalog cuts are on file.		**		
13. All required documentation for inspected Items Acceptance IIA) is on file.		**		
14. IIA quantities match the final quantities.		**		
15. All required Manufacturers Certifications and Mill Certifications are on file.		**		
16. The manufacturers Certification quantities match the final quantities.		**		
17. Minor quantities are documented.				
18. All material acceptance actions have satisfactory test results or other approved documentation prior to payment for the work.				
19. Pavement and Surfacing depths meet plan requirements.				
20. Pavement and Bridge widths meet plan requirements.				

* All "No" checks constitute materials certification deficiency. These each require a comment or an explanation by the Project Engineer and an attachment to the Certification of Materials detailing the circumstances.

** These deficiencies reflect acceptance of non specification materials and may result in loss of participation on Federal Aid Contracts.

*** Follow up documentation for questionable and excessive deviations is attached.

Comments: (Use additional Sheet if necessary)

Project Engineer Signature — Date

Construction/Operations Engineer Signature — Date

DOT Form 350-115 EF
Revised 11/94

Washington State
Department of Transportation

Gradation Chart

Gradation Chart
Sieve Sizes Raised to 0.45 Power

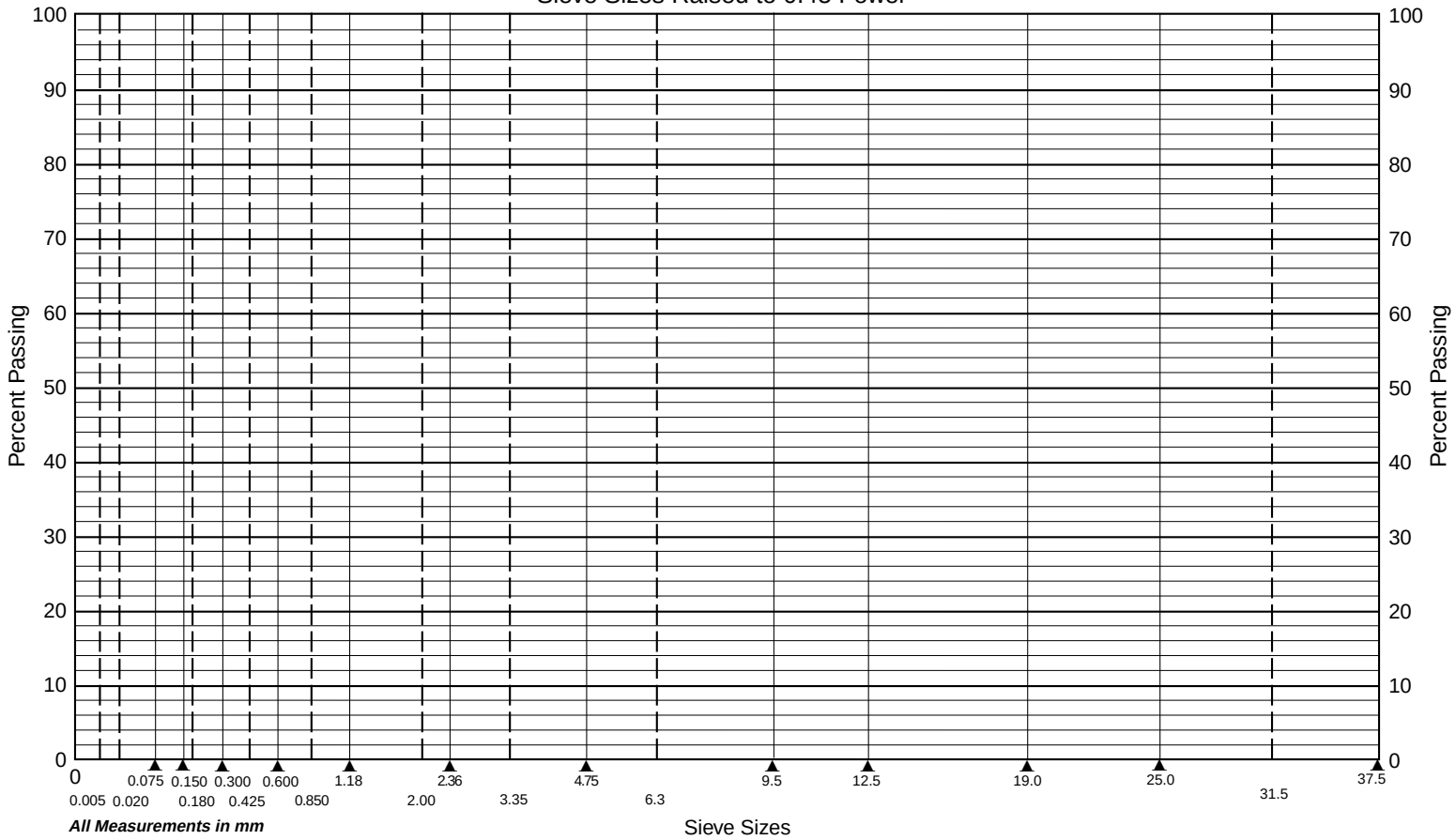

All Measurements in mm

▲ This symbol identifies simplified practice and compatible sieve sizes

Identification of gradations:

Sheet No.

Date

DOT Form 350-564 Metric
Revised 1/96

Washington State
Department of Transportation

Log of Test Boring

____ S.H. ____ S.R. _____ Section _____ Job No. _____

Hole No. _____ Sub Section _____ Cont. Sec. _____

Station _____ Offset _____ Ground El. _____

Type of Boring _____ Casing _____ W.T. El. _____

Inspector _____ Date _____ Sheet _____ of _____

Depth	Blows/ 300 mm	Profile	Sample Tube Nos.	Description of Material

DOT Form 351-003X Metric
Revised 12/95

Copy to _____

Hole No. _____ Sub Section _____ Sheet _____ of _____

Depth	Blows/ 300 mm	Profile	Sample Tube Nos.	Description of Material

DOT Form 351-003A Metric
Revised 12/95

Washington State Department of Transportation

Final Contract Voucher Certificate

Contractor			
Street Address			
City	State	Zip	Date
State Project Number	Federal-Aid Project Number		Highway Number
Job Description (Title)			
Date Work Physically Completed	Final Amount $		

Contractor's Certification

I, The undersigned, having first been duly sworn, certify that I am authorized to sign for the claimant; that in connection with the work performed and to the best of my knowledge no loan, gratuity or gift in any form whatsoever has been extended to any employee of the Department of Transportation nor have I rented or purchased any equipment or materials from any employee of the Department of Transportation; I further certify that the attached final estimate is a true and correct statement showing all the monies due me from the State of Washington for work performed and material furnished under this contract; that I have carefully examined said final estimate and understand the same and that I hereby release the State of Washington from any and all claims of whatsoever nature which I may have, arising out of the performance of said contract, which are not set forth in said estimate.

X _____
Contractor Authorized Signature Required

_____
Type Signature Name

Subscribed and sworn to before me this _____ day of _____ 19 _____

X _____ Notary Public in and for the State of Washington,

residing at _____ .

Department of Transportation Certification

I, certify the attached final estimate to be based upon actual measurements, and to be true and correct.

Approved Date _____

X _____
Project Engineer

X _____
Regional Administrator

Oympia Service Center Use Only

Date of Acceptance _____ By X _____

This Final Contract Voucher Certification is to be prepared by the Engineer and the original forwarded to the Olympia Service Center for acceptance and payment.

Contractors Claims, if any, must be included and the Contractors Certification must be labeled indicating a claim attached.

DOT Form 134-146 EF
Revised 1/95

Distribution: White - Olympia Service Center Canary - Region Pink - Engineer Goldenrod - Contractor

Washington State Department of Transportation

Request for Approval of Material

Contract	FA Number	SR	Date
Section		County	
Contractor	Subcontractor		

For assistance in completing, see Instructions and Example

RAM #

Bid Item No.	Material or Manufacturer's Product/Type	Name of Manufacturer/Fabricator or Pit Number	Specification Reference	PE Appr'l Code	OSC Appr'l Code	File No.

WSDOT USE

Project Engineer	Date	OSC Materials Engineer	Date

Approval Action Codes for use by Project Engineer and OSC Materials Laboratory

1. Conditionally Approved: Acceptance based upon 'Satisfactory' Test Report for samples of materials to be incorporated into project.
2. Conditionally Approved: Submit Mfg. Cert. of Compliance for 'Approval' prior to use of material.
3. Conditionally Approved: Submit Catalog Cuts for 'Approval' prior to use of material.
4. Conditionally Approved: Submit Shop Drawings for 'Approval' prior to fabrication of material.
5. Conditionally Approved: Only 'Approved for Shipment' or 'WSDOT Inspected' material *shall* be used.
6. Conditionally Approved: Submit Materials Certificate of Origin to Project Engineer.
7. Approval Pending: Request Transmitted to OSC Materials Laboratory for Approval Action.
8. Source Approved:
9. Approval Withheld: Submit samples for preliminary evaluation.
10. Approval Withheld:
11.

Remarks:

Project Engineer Distribution

- ☐ Contractor
- ☐ Region Operations Engineer
- ☐ Region Materials
- ☐ OSC Materials Lab

OSC Materials Engineer Distribution

- ☐ General File
- ☐ Fabrication Inspection
- ☐ Signing Inspection
- ☐ Other _____

DOT Form 350-071 EF
Revised 1/98

Washington State
Department of Transportation

Contractor and Subcontractor or Lower Tier Subcontractor Certification for Federal-Aid Projects

(Required for each subcontractor or Lower Tier Subcontractor on all Federal-Aid projects)

Contract Number	Federal-Aid Number	State Route Number

Subcontractor or Lower Tier Subcontractor

To be signed by proposed subcontractor or lower tier subcontractor

The contract documents for this subcontract include as part of the subcontract a special provision entitled "Required Federal-Aid Provisions", the "Required Contract Provisions Federal-Aid Construction Contracts (FHWA 1273)", and the minimum wage rates.

I certify the above statement to be true and correct.

Company _____

By _____ Date _____

Title _____

Contractor Certification

To be completed and signed by the contractor

1. ☐ A written agreement has been executed between my firm and the above subcontractor.

2. ☐ A written agreement has been executed between (the subcontractor) _____ and the above lower tier subcontractor.

All documents required by the special provision entitled "Required Federal-Aid Provisions" are included in the agreement for (1) or (2) marked above.

I certify the above statements under Contractor Certification to be true and correct.

Company _____

By _____ Date _____

Title _____

DOT Form 420-004
Revised 10/94

Washington State Department of Transportation

Release - Retained Percentage (Except Landscaping)

Contractor				
Street Address				
City	State	Zip	Date	
State Project Number	Federal-Aid Project Number		Highway Number	
Job Description (Title)				

Request

The undersigned Contractor hereby requests that payment be made of all amounts retained except for moneys earned on landscaping.

This request is made in accordance with RCW 60.28.011 which includes the following:

> "After completion of all contract work other than landscaping, the contractor may request that the public body release and pay in full the amounts retained during the performance of the contract, and sixty days thereafter the public body must release and pay in full the amounts retained (other than continuing retention of five percent of the moneys earned for landscaping) subject to the provisions of chapters 39.12 and 60.28 RCW."

Retainage eligible for release $ _____

FOREGOING APPROVED

Surety

X _____
Attorney-In-Fact

Date _____

Contractor

X _____
Contractor Authorized Signature

_____
Type Signature Name

Date _____

This Area for Department of Transportation Use Only

1. Amount of Landscaping Moneys Earned to Date _____
2. Remarks _____

All contract work other than landscaping has been completed.

X _____
Project Engineer Date

APPROVED

X _____
OSC Construction Office Date

Distribution: Original - OSC Construction; Canary - Region; Pink - Project File; Goldenrod - Contractor

Washington State
Department of Transportation

Request to Sublet Work

☐ Subcontractor ☐ Lower Tier Subcontractor

Prime Contractor	Federal Employer I.D. No. *	State Contract No.
Job Description (Title)		Request No.

Approval is Requested to Sublet the Following Described Work to:

Subcontractor or Lower Tier Subcontractor			Federal Employer I.D. No. *
Address			Telephone No.
City	State	Zip	Estimated Starting Date
If Lower Tier Subcontractor, ID of Corresponding Subcontractor			** If no Federal Employer ID Number, Use owner's Social Security Number*

Item No.	Partial	Item Description	Amount

I understand and will insure that the subcontractor will comply fully with the plans and specifications under which this work is being performed.

Prime Contractor Signature Date

This Area for Department of Transportation Use Only

Percent of Total Contract

This Request _____ %

Previous Requests _____ %

Sublet to Date _____ %

☐ DBE ☐ MBE ☐ WBE

Remarks:

☐ Approved

Project Engineer Date

Approved District Construction Engineer (when required) Date

DOT Form 421-012X
Revised 4/94

Distribution: White - District Canary - Project Engineer Pink- Contractor

Washington State
Department of Transportation

Contractor's Daily Report of Traffic Control - Summary

Page One

Contract Number _____ SR Number _____ Day _____ Date _____

Photos/Videos taken today for record? ☐ Yes ☐ No

If yes, note locations:

Summary of TCS Activities:

Contractor

Contractor's Traffic Control Supervisor's Signature

WSDOT Project Office
Comments:

To be Completed by Contractor's Traffic Control Supervisor (TCS)

DOT Form 421-040A
2/94

Distribution: White - Contractor Canary - Project Engineer

Washington State
Department of Transportation

Contractor's Daily Report of Traffic Control - Traffic Control Log

Use Separate Sheet for Each Setup
(May be altered to record Class A signs.)

Page _____

Contract Number _____ SR Number _____ Day _____ Date _____

Setup

	Station - Time	Station - Time	
◇	—	—	◇
◇	—	—	◇
◇	—	—	◇
◇	—	—	◇
◇	—	—	◇

Work Area

◇	—	—	◇
◇	—	—	◇
◇	—	—	◇
◇	—	—	◇
◇	—	—	◇

↑ One Way Traffic (one or more lanes) ↑

↓ Two Way Traffic (two or more lanes) ↑

Legend

(List of Signs Used)

1. _____
2. _____
3. _____
4. _____
5. _____
6. _____
7. _____
8. _____

Cones ☐ Yes ☐ No

Piloted ☐ Yes ☐ No

Per Approved Plan ☐ Yes ☐ No

Flagger(s)	Start	End

_____
Contractor

_____
Contractor's Traffic Control Supervisor's Signature

Type of Traffic Control	Time Set Up	Time(s) Checked	Time Removed

To be Completed by Contractor's Traffic Control Supervisor (TCS)

DOT Form 421-040B
Revised 10/95

Distribution: White – Contractor; Canary – Project Engineer

CONTRACT PROGRESS SCHEDULE

PROJECT TITLE	SR NO.	CONTRACT NO.

SHOW DATE CONTRACT TIME STARTS

WORKING DAYS

ITEMS	0	5	10	15	20	25	30	35	40	45	50	55	60	65	70	75	80	85	90	95	100
1																					
2																					
3																					
4																					
5																					
6																					
7																					
8																					
9																					
10																					
11																					
12																					
13																					
14																					
15																					
16																					

INSTRUCTIONS:
1 *Show date Contract Time Starts.*
2 *Fill in pertinent items for the contract; such as, clearing & grubbing, grading & draining, surfacing, CTB, paving or oiling, bridge excavation, bridge substructure, bridge superstructure, miscellaneous items.*
3 *Show by pencil or color the number and sequence of working days allotted to each item shown.*
4 *Submit one copy to Project Engineer.*

NOTE: Use two or more sheets if necessary for working days or items.

CONTRACTOR _____

BY _____

DATE _____

DOT FORM 421-506
REVISED 9/87

MONTHLY EMPLOYMENT UTILIZATION REPORT WORKSHEET

Craft: _____

REPORTING PERIOD	NUMBER OF EMPLOYEES			WORK HOURS OF EMPLOYMENT (Federal & Non-Federal)			WORK HOURS PERCENTAGE		COMPLIANCE	
	TOTAL	MINORITY	FEMALE	TOTAL	MINORITY	FEMALE	MINORITY	FEMALE	YES	NO

Washington State Department of Transportation

Affidavit of Amounts Paid DBE/MBE/WBE Participants

July 1, _____ thru June 30, _____ (Fiscal Year) or Completion Date _____ (Final)	State Contract Number Federal Employer I.D. Number
Contractor	

DBE/MBE/WBE PARTICIPANT NAME AND FEDERAL EMPLOYER I.D. NO.	DBE, MBE, or WBE	ETHNIC CODE	CONTRACT TYPE	BID ITEM NO.(s)	AMOUNT PAID PARTICIPANTS (Including Retainage Held) $

ETHNIC CODE:

B = Black
H = Hispanic
A = Asian Pacific
X = Asian Indian
I = Native American
O = Other

CONTRACT TYPE:

S = Subcontractor
M = Manufacturer
J = Joint Venture
A = Agent
R = Regular Dealer
V = Service Provider

Total DBE/MBE Participation Achieved

Total WBE Participation Achieved

AFFIDAVIT

I, the undersigned, do hereby certify that in connection with all work on the project for which this statement is submitted, each DBE/MBE/WBE participant contracted by me has been paid the amounts shown for bid items, or portions thereof listed.

Signature	Title

Notary Seal

Subscribed and sworn before me this _____ day of _____ , 19 _____

X _____ Notary Public in and for the State of Washington

residing at _____

This form required from the Prime Contractor on all projects annually by the 20th of July and upon completion of the project.

DOT Form 421-023 EF
Revised 6/97

FEDERAL-AID HIGHWAY CONSTRUCTION CONTRACTORS ANNUAL EEO REPORT

OMB NO. 2125-0019

Report For

JULY _____ 19 ____

1. CHECK APPROPRIATE BLOCK ☐ Contractor ☐ Subcontractor	2. NAME AND ADDRESS OF FIRM	3. FEDERAL-AID PROJECT NUMBER	4. TYPE OF CONSTRUCTION

5. COUNTY AND STATE	6. PERCENT COMPLETE	7. BEGINNING CONSTR. DATE	8. DOLLAR AMOUNT OF CONTRACT	9. ESTIMATED PEAK EMPLOYMENT	
				Month and Year (a)	Number of Employees (b)

10. EMPLOYMENT DATA

JOB CATEGORIES	Table A: TOTAL EMPLOYEES		TOTAL MINORITIES		BLACK *Not of Hispanic Origin*		HISPANIC		AMERICAN INDIAN OR ALASKAN NATIVE		ASIAN OR PACIFIC ISLANDER		WHITE *Not of Hispanic Origin*		Table B: APPRENTICES		ON THE JOB TRAINEES	
	M	F	M	F	M	F	M	F	M	F	M	F	M	F	M	F	M	F
OFFICIALS *(Managers)*																		
SUPERVISORS																		
FOREMEN / WOMEN																		
CLERICAL																		
EQUIPMENT OPERATORS																		
MECHANICS																		
TRUCK DRIVERS																		
IRONWORKERS																		
CARPENTERS																		
CEMENT MASONS																		
ELECTRICIANS																		
PIPEFITTERS, PLUMBERS																		
PAINTERS																		
LABORERS, SEMI-SKILLED																		
LABORERS, UNSKILLED																		
TOTAL																		
Table C																		
APPRENTICES																		
ON THE JOB TRAINEES																		

11. PREPARED BY: *(Signature and Title of Contractors Representative)*	DATE	REVIEWED BY: *(Signature and Title of State Highway Official)*	DATE

This report is required by law and regulation (23 U.S.C. 140a and 23 CFR Part 230). Failure to report will result in noncompliance with this regulation.

Form FHWA-1391 (Rev. 3-92) PREVIOUS EDITIONS ARE OBSOLETE

OMB NO. 2125-0033

U.S. Department of Transportation
Federal Highway Administration

STATEMENT OF MATERIALS AND LABOR USED BY CONTRACTORS ON HIGHWAY CONSTRUCTION INVOLVING FEDERAL FUNDS

ALL — *To be completed by Washington Headquarters Personnel* (2–4, 5–8, 9–12, 13–15; 16–18, 19–27, 28–30, 31–33)

PART A *To be completed by FHWA or State Highway Personnel (See instructions on reverse)*

STATE*	COUNTY	FEDERAL PROJECT NO.*	URBAN ( ) RURAL ( )

CARD A

ITEM	DESCRIPTION		ROADWAY	BRIDGE *(Over 20 ft)*	DATE STARTED*
	CONSTRUCTION TYPE CODES				
1	LENGTH OF PROJECT	MILES			DATE COMPLETED*
2	FINAL* CONSTRUCTION COST	DOL			TOTAL NO. BRIDGES

PART B *To be completed by; contractor – see instructions on reverse (REMARKS Attach a plain sheet of paper)*

3	**LABOR*** TOTAL PROJECT	TOTAL LABOR-HOURS	GROSS EARNINGS

	ITEM	DESCRIPTION	UNIT	PROJECT QUANTITY
CARD B	4	TOTAL COST OF ALL MATERIALS & SUPPLIES*	DOL.	
	5	PETROLEUM PRODUCTS*	GAL.	
	6	CEMENT	BBL.	
	7		LB.	
CARD C	8	AGGREGATES PURCHASED	TON.	
	9		CU. YD.	
	10	BITUMINOUS MATERIAL	GAL.	
	11	LUMBER	THSD. BD. FT.	
CARD D	12	REINFORCING STEEL	LB.	
	13	STRUCTURAL STEEL	LB.	
CARD E	14	READY-MIXED CONCRETE	CU. YD.	
	15	PREMIXED BITUMINOUS PAVING MATERIALS	TON.	
	16	AGGREGATES PRODUCED	TON.	
	17		CU. YD.	
CARD F	18	MISCELLANEOUS STEEL	LB.	
	19	NOISE BARRIERS	LIN. FT.	
	20	GUARDRAIL	LIN. FT.	
	21	BRIDGE RAIL	LIN. FT.	
CARD G	22	FINAL CONTRACT AMOUNT FOR SIGNS	DOL.	
	23	FINAL CONTRACT AMT. FOR LIGHTING	DOL.	
	24	FINAL CONTRACT AMT. FOR TRAFFIC SIGNALS	DOL.	

Blocks 48–70 to be completed by FHWA Washington Headquarters Personnel (48, 52–53, 61–62, 70)

CULVERT ITEMS

CARD H — 25 CORR. STEEL CULVERT

SIZE *(In.)*	LGTH *(Lin ft)*

CARD J — 26 CONCRETE PIPE

SIZE *(In.)*	LGTH *(Lin ft)*

CARD K — 27 CLAY PIPE

SIZE *(In.)*	LGTH *(Lin ft)*

CARD L — 28 CORR. ALUMINUM CULVERT

SIZE *(In.)*	LGTH *(Lin ft)*

CARD M — 29 PLASTIC PIPE

SIZE *(In.)*	LGTH *(Lin ft)*

***MUST BE REPORTED ON ALL REPORTS** REVIEWED BY DATE:

FORM FHWA-47 (Rev. 6–90) PREVIOUS EDITIONS ARE OBSOLETE

INSTRUCTIONS FOR PREPARING AND TRANSMITTING FORM FHWA-47

GENERAL REQUIREMENTS

Form FHWA-47 should be transmitted for each Federal-aid primary, urban and Interstate system project involving construction performed under contract awarded by competitive bidding, except projects for which the total final construction cost of roadway and bridge is less than $1,000,000 or projects consisting primarily of (1) the installation of protective devices at railroad grade crossings, or (2) highway beautification.

Form FHWA-47 should be transmitted with or, if data is already available,in advance of the Final Report required by Federal-Aid Highway Program Manual Vol. 6; CH. 4; Sec. 2; Sub. Sec. 8.

A separate form should be transmitted for each contract except that data for two or more contracts on the same project may be combined when such contracts are completed at approximately the same time. In case of a combination, the earliest starting date and the latest completion date should be reported. Where a single contract covers more than one project, one form may be prepared for each project or for the entire contract, provided none of the data are duplicated. A Form FHWA-47 should not be prepared for a contract covering only the purchase of material but the quantity of material should be reported when subsequently included in a construction project. In all cases, only the original of Form FHWA-47, typed or clearly lettered, and no carbon or photocopies, should be transmitted to the Washington Office.

If nonparticipating work is included in the contract, all data should be combined with the Federal-aid data in preparing the form. Data for any subcontract must be combined by the State or the division office with the prime contract if not so combined by the prime contractor. It will be the State's responsibility to see that all prime contract and subcontract costs, material, and labor-hours have been reported for each contract, and no duplication of data are involved. Quantities of State-furnished materials should be included with contract quantities. and costs of STATE-furnished materials should be added to Item 2 "Final Construction Cost" and also to Item 4 "Total Cost of All Materials and Supplies." All quantities should be reported to the nearest whole unit and only in the units specified . All costs should be reported to the nearest dollar.

Check urban or rural to indicate whether the major cost is for work within an urban area or in a rural location.

All figures should be verified for reasonableness by State highway department and Federal Highway Administration division office engineers. The total material cost and the total labor-hours and gross earnings should bear reasonable relationships to the final construction cost. Also the quantity of each material reported should be reasonable with respect to the size and nature of the contract and with respect to the quantities of other materials. For example, if a large quantity of reinforcing steel is reported with no cement or ready-mixed concrete, an error of omission in reporting would be indicated.

Generally, the total cost of materials, supplies, and labor should be substantially less than the final construction cost, as the latter also includes costs of equipment ownership, overhead, and profit which are not required to be reported. If the final construction cost is less or only a few percent more than the total cost of materials, supplies and labor, the indication is that the contractor suffered a loss on the project or that there is an error in reporting. In such case, if it is determined that the figures reported are correct, a statement should be made on a plain sheet of paper marked "Remarks" to the effect that the contractor actually did suffer a loss, (verify with contractor).

Part A– INFORMATION TO BE SUPPLIED BY FEDERAL HIGHWAY ADMINISTRATION OR STATE HIGHWAY PERSONNEL (FEDERAL-AID HIGHWAY PROGRAM, VOL. 6: CH. 1; SECT. 1; SUB. SEC. 11)

Item 1– "Length of Project." – Report official roadway mileage and official bridge mileage.

Item 2 –"Final Construction Cost" – Show best estimate of Federal and State costs incurred to date for contract items, extra work performed by contractor, and State-furnished materials.

PART B–INFORMATION TO BE SUPPLIED BY CONTRACTOR IMMEDIATELY UPON COMPLETION OF CONTRACT OR PROJECT

Specific Instructions for the Following Numbered Items:
Item 3 – Report total labor-hours worked and earnings of all contractor's employees on the project, including those on operation and maintenance of equipment.
Item 4 – This should be the total cost, at the jobsite, of all construction materials and supplies purchased for and used on the project, including the cost of materials for signing and lighting and the cost of any materials and supplies not specifically listed hereon. Costs of equipment or equipment rental and the cost of operating the equipment, except the costs of fuel and lubricants, should not be included in this item. Small items of equipment such as jackhammers, handtools, repair parts, tires, etc., are not considered to be supplies. Costs of such items and also overhead costs should not be included. The amount included here for aggregates produced should be only the cost paid by the contractor for the aggregates and should not include the costs of excavating, processing, loading and hauling. Wages and labor-hours for aggregates produced should, of course, be included with Item 3.
Item 5 – Report total number of gallons of all gasoline, diesel oil, lubricating oil, and grease for equipment and trucks. For conversion purposes use factor of 8 pounds of grease per gallon.
Items 6 and 7 – Report quantity of cement used on project. Do not report here the cement included in Item 14.
Items 8 and 9 – Report quantity of aggregates purchased from commercial producers, such as sand, gravel, crushed stone, etc. Do not report here aggregates included in Items 14 and 15. Aggregates produced by the contractor shall be reported as Items 16 and 17.
Item 10 – Report number of gallons of bitumens such as asphalt and tar. Do not report here bituminous materials included in Item 15.
Item 11 – Report all lumber products purchased for and used on the project, including plywood and pressed wood, but excluding timber piling, lumber in fencing, guardrail, and signs, and lumber purchased for or used on previous projects and previously reported. The quantity of lumber should be reported as the number of thousand board feet and not as the number of board feet.
Item 12 – Report total number of pounds of reinforcement (plain or coated) for both structures and pavement. Include estimated quantities of reinforcing and prestressing steel in purchased precast units, except concrete pipe reinforcement.
Item 13 – Report total number of pounds of structural steel, steel H-piling, and sheet piling.
Item 14 – Report total number of cubic yards of ready-mixed concrete plus estimated quantity of concrete in purchased precast units, excluding Item 26.
Item 15 – Report total number of tons of bituminous paving mixtures that are purchased in a prepared condition ready for placement as they reach the job.
Items 16 and 17 – Report total quantity of aggregates such as sand, gravel, crushed stone, etc., produced by the contractor.
Item 18 – Report estimated total weight of steel products not appropriate for Items 12, 13, and 25, such as joint devices, tubular piling, etc.
Items 19, 20 and 21 – Report total lengths, in linear feet, of all types of noise barriers, guardrail and bridge rail.*
Item 22 – Report final contract amount for all types of signs including foundations, posts, structural supports, etc. Do not include traffic signals.*
Item 23 – Report final contract amount for highway and bridge lighting including foundations, conduits, standards, wiring, switches, luminaires, etc. Do not include traffic signals.*
Item 24 – Report final contract amount for traffic signals.*
Item 25 – Report, by size, regardless of class, type, gauge or coating, number of linear feet of corrugated steel pipe, structural plate pipe, pipe-arches and arches.
Item 26 – Report, by size, regardless of class, type, gauge or coating, total number of linear feet of plain and reinforced concrete drain and culvert pipe.
Item 27 – Report, by size, total number of linear feet of clay pipe.
Item 28 – Report, by size, total number of linear feet of corrugated aluminum culvert.
Item 29 – Report, by size, total number of linear feet of plastic pipe.

*Quantities of steel, concrete and lumber used in connection with Items 19, 20, 21, 22, 23 and 24 should not be reported unless difficulties are encountered in segregating such quantities from total quantities.

FORM FHWA-47 (Rev. 6–90)

★U.S.GPO:1990-0-261-335/16519

Washington State
Department of Transportation

Summary Report of Acceptance Sampling & Testing

INSTRUCTIONS TO USER:

1. Use separate form for each aggregate type.
2. Form may be used for successive days until full.
3. Indicate evaluation (pass/fail) of results and failing attributes by X.
4. Complete test results shall be included if required by Project Engineer.
5. Circle Independent Assurance Samples.
6. Submit to OSC Materials Laboratory.

SR	Section	Contract No.	Page of
Material Produced from Pit or Quarry Site No.			
Aggregate For	Project Engineer		Region

Date										
Time										
Tons Produced to Date										
Acceptance Sample No.										
Assurance Sample No.										
	Specs.									
% Passing 63.0 mm										
50.0 mm										
37.5 mm										
31.5 mm										
25.0 mm										
19.0 mm										
16.0 mm										
12.5 mm										
9.5 mm										
4.25 mm										
3.35 mm										
2.36 mm										
2.00 mm										
1.18 mm										
0.60 mm										
0.425 mm										
0.300 mm										
0.180 mm										
0.150 mm										
0.075 mm										
Dust Ratio										
S.E.										
Fracture										
* Sample Passed Y/N										

Complete if required by Project Engineer

Indicate failing attributes by X

Copies to:

- ☐ OSC Mats Lab
- ☐ Region Mats } As directed by Region
- ☐ Region Const. } As directed by Region

Inspector Signature _____ Date _____

DOT Form 350-114 Metric
Revised 11/95

Distribution: Original - Project Engineer; Duplicate - Retained

Washington State
Department of Transportation

Certification of Materials Origin

(Required for acceptance of Steel or Iron Construction Materials)

Contact	SR
Section	
Contractor	
Subcontractor / Supplier	
Materials: Bid Item	Quantity
Description	

The following Certification of Materials Origin is made for the purposes of establishing materials acceptance under Contract Provisions entitled "American-Made Materials." Materials as described above are furnished for use in compliance with the certification as noted in 1 or 2 below. Manufacturing processes for the materials are defined on the back of this form.

☐ 1. The materials covered by this certification are American-made with all manufacturing processes entirely within the United States of America.

☐ 2. The materials furnished for this project under this certification contain steel or iron manufactured, all or in part, outside the United States of America.

The description and country of origin of these materials is as follows:

_____

_____

The invoice cost for the above described foreign-made materials is:

_____

_____

_____

I declare under penalty of perjury under the laws of the State of Washington that the foregoing is true and correct.

_____
Contractor / Subcontractor / Supplier (Name)

_____ / / _____
Authorized Corporate Official (Signature) Date Place

DOT 350-109
Revised 8/92 Frame

Side 1 of 2

Washington State Department of Transportation

Order to Suspend Work

Contract No. _____ F.A. No. _____

Highway No. _____

Section _____

Date _____

TO: _____

_____

_____

Dear Sir:
You are ordered to suspend work operations on (date) _____
on the items of work and for the reasons as stated below:

This order is in accordance with Section 1-08.6 of the Standard Specifications.

Very Truly Yours,

_____
Project Engineer

Contractor – White
District Operations Engineer– Canary
Project Engineer – Pink
Maintenance – Goldenrod

DOT 421-006
Revised 8/92 Frame

Washington State Department of Transportation

Order to Resume Work

Contract No. _____ F.A. No. _____

Highway No. _____

Section _____

Date _____

TO: _____

_____

_____

Dear Sir:
You are ordered to resume work operations on (date) _____ on the following items of work and for the reasons as stated below, on which work was suspended (date) _____ :

Number of working days in this suspension period _____

Number of unworkable days and suspension previously reported _____

Total authorized suspensions and unworkable days to date _____
(to be reflected on the next weekly statement of working days)

This order is in accordance with Section 1-08.6 of the Standard Specifications.

Very Truly Yours,

_____
Project Engineer

Contractor – White
District Operations Engineer– Canary
Project Engineer – Pink
Maintenance – Goldenrod

DOT 421-007
Revised 8/92 Frame

NOTE: This Training Program shall be submitted to the Engineer at the Pre-Construction Conference. Failure to provide this Training Program may result in the withholding of progress payments.

TRAINING PROGRAM

If you have assigned training requirements to your subcontractor(s), a separate Training Program must be completed and submitted for each subcontractor. Subcontractor(s) programs must be submitted and reviewed by the prime.

☐ **PRIME** ☐ **SUB** **Contractor Name:**	Federal Employer's I.D. No.*	WSDOT Contract No.

Address	City	State	Zip	Date

Federal-Aid Project No.	Project Title	Trainees Assigned	Trainee Hours Assigned

*If no Federal Employer's I.D. no., use owner's social security number.

I. APPROVAL : Approval is requested to provide training, per Section 1-07.11(7) of the Standard Specification in the following areas:

A Apprenticeship/ Trainee Craft	B Number of Trainees Projected	C Hourly Assignment Per Trainee	D Total Hours Assigned to Craft	E BAT or JATC Approved? Yes/No*	F Estimated Start Date

* IF YOUR ANSWER IS NO, PLEASE REFER TO SECTION III . Apprenticeship programs registered with the U.S. Department of Labor, Bureau of Apprentice and Training (BAT), or with the Washington State Department of Labor and Industries Joint ApprenticeshipTraining Council (JATC) will be considered acceptable.

II. AFFIRMATIVE ACTION — This training commitment is not intended and shall not be used, to discriminate against any applicant for training, whether a member of a minority group or not. However, the training and upgrading of minorities and women toward journeyman status is a primary objective of this training provision. Accordingly, the Contractor shall make every effort (documentation will be required if non-protected persons are proposed) to enroll minority trainees and women to the extent that such persons are available within a reasonable area of recruitment.

III. PROGRAMS NOT APPROVED BY BAT OR JATC — A detailed breakdown of the hours assinged to the various skills of the trade must be submitted for other than apprenticeship trades. In addition to completing Section I, the Contractor must provide the following standards:

A. Minimum Qualifications — The Contractor shall establish minimum qualifications for persons entering the training program. (No employee shall be employed as a trainee in any classification in which he/she has successfully completed a training course leading to journeyman status or in which he/she has been employed as a journeyman.)

B. Work Skills — An outline of the work processes in which the trainee will receive supervised work experience and training on-the-job and the allocation of the approximate time to be spent in each major process shall be set forth in these standards.

C. Terms of Training — The term of training (the number of hours required for completion to journeyman status — not to exceed 1,000 hours for any one individual) shall be stated in hours.

D. Program Monitoring — The method for recording and reporting the training completed shall be stated herein.

E. Ratio of Trainees — A numeric ratio of trainees to journeyman shall be established. It shall be consistent with proper supervision, training, safety and continuity of employment. The ratio language shall be specific and clear as to application in terms of job site and workforce during normal operations (considered to fall between 1:10 and 1:4).

I understand and will comply fully with the plans and specifications under which this training is being performed, and will report subsequent revisions to the training program as changes occur.

Primecontractor's Signature Date Subcontractor's Signature (If applicable) Date

THIS AREA FOR DEPARTMENT OF TRANSPORTATION USE ONLY		
DISTRICT APPROVAL ☐ APPROVED ☐ DISAPPROVED	DATE	TITLE

The District may approve pre-approved training and apprentice crafts programs if all other Training Provision Program criteria are met.
NOTE: FHWA concurrence is required for final approval of programs proposed under Section III on Interstate contracts only.

FEDERAL HIGHWAY ADMINISTRATION CONCURRENCE		
FHWA APPROVAL ☐ APPROVED ☐ DISAPPROVED	DATE	TITLE

DOT FORM 272-049 REVISED5/90 DISTRIBUTION: White - Hdqtrs. Copy Canary - Dist. Copy Pink - Contractor Copy

Apprentice/Trainee Approval Request

NOTE: This form shall be submitted for each trainee intended for utilization per the Special Training Provision. The Prime Contractor is required to review and submit this form for approval of its subcontractor(s) trainees.

Prime Contractor	Federal Employer ID No *	WSDOT Contract No.
Subcontractor (If trainee is not employed by prime)	Federal Employer ID No *	Federal-Aid No.

* If no Federal Employer ID, use owner's Social Security N

APPROVAL REQUEST - Approval is requested to provide training, per our approved Training Program, to the following apprentice/trainee:

Trainee		Job Classification of Trainee	
Social Security Number	Employee Status ☐ New Hire ☐ Up-grade	Hours To Be Trained This Project	Trainee Start Date
Wage rate	Type of on the job training ☐ Apprenticeship ☐ Other (describe)		

NOTE: MINIMUM WAGE - Trainees shall be paid in accordance with the provisions of RCW 39.12.021, which reads as f

Apprentice workmen employed upon public works projects for whom an apprenticeship agreement has been registered and approved with th State Apprenticeship Council pursuant to chapter 49.04 RCW, must be paid at least the prevailing hourly rate for an apprentice of that trade Any workman for whom an apprenticeship agreement has not been registered and appproved by the State Apprenticeship Council shall be considered to be a fully qualified journeyman and therefore, shall be paid at the prevailing hourly rate for journeymen.

Ethnic Group	☐ Black	☐ Asian	☐ American Indian	☐ Spanish American	☐ Other	Sex ☐ M ☐ F

Good faith effort documentation is REQUIRED if a non-protected person is proposed for training.

Summary of previous training. (Enter amount and type of training previously received by trainee. If known, please indicate other WSDOT contract(s) trainee has been utilized, per the Special Training Provision.) _____

_____

_____

_____

_____

Prime Contractor's Signature Date (Sub) Contractor's Signature Date

THIS AREA FOR DEPARTMENT OF TRANSPORTATION USE ONLY

☐ APPROVED ☐ DENIED

REMARKS: _____

_____

_____

_____

_____

_____

_____

District Approving Authority Date Title

DOT Form 272-050 Revised 5/90 DISTRIBUTION: White - Contractor Canary - District Pink - Headquarters Goldenrod - Trai

FEDERAL-AID HIGHWAY CONSTRUCTION
CUMULATIVE TRAINING REPORT

INSTRUCTIONS: This report is to be completed annually by the District EEO Officer summarizing the data found on Form DOT 272-060. This report is due at Headquarters by June 20th. A computer generated report providing the same information as requested may be submitted in lieu of this report.

DIST. _____

REPORTING PERIOD
JUNE 1, 19____ TO MAY 31, 19_____

NUMBER RECEIVING TRAINING DURING REPORT PERIOD

TRAINING CLASSIFICATION	TOTAL EMPLOYEES		TOTAL MINORITIES		BLACK *NOT OF HISPANIC ORIGIN*		HISPANIC		AMERICAN INDIAN OR ALASKAN NATIVE		ASIAN OR PACIFIC ISLANDER		WHITE *NOT OF HISPANIC ORIGIN*		**TOTAL HOURS**
	M	F	M	F	M	F	M	F	M	F	M	F	M	F	
EQUIPMENT OPERATORS															
MECHANICS															
TRUCK DRIVERS															
IRONWORKERS															
CARPENTERS															
CEMENT MASONS															
ELECTRICIANS															
LABORERS, BAT/JATC															
LABORERS, NON BAT/JATC															
OTHER SKILLS															
TOTAL															

NUMBER STARTING TRAINING DURING REPORT PERIOD

TRAINING CLASSIFICATION	TOTAL EMPLOYEES		TOTAL MINORITIES		BLACK *NOT OF HISPANIC ORIGIN*		HISPANIC		AMERICAN INDIAN OR ALASKAN NATIVE		ASIAN OR PACIFIC ISLANDER		WHITE *NOT OF HISPANIC ORIGIN*		**TOTAL HOURS**
	M	F	M	F	M	F	M	F	M	F	M	F	M	F	
EQUIPMENT OPERATORS															
MECHANICS															
TRUCK DRIVERS															
IRONWORKERS															
CARPENTERS															
CEMENT MASONS															
ELECTRICIANS															
LABORERS, BAT/JATC															
LABORERS, NON BAT/JACT															
OTHER SKILLS															
TOTAL															

NUMBER COMPLETING TRAINING DURING REPORT PERIOD

TRAINING CLASSIFICATION	TOTAL EMPLOYEES		TOTAL MINORITIES		BLACK *NOT OF HISPANIC ORIGIN*		HISPANIC		AMERICAN INDIAN OR ALASKAN NATIVE		ASIAN OR PACIFIC ISLANDER		WHITE *NOT OF HISPANIC ORIGIN*		**TOTAL HOURS**
	M	F	M	F	M	F	M	F	M	F	M	F	M	F	
EQUIPMENT OPERATORS															
MECHANICS															
TRUCK DRIVERS															
IRONWORKERS															
CARPENTERS															
CEMENT MASONS															
ELECTRICIANS															
LABORERS, BAT/JATC															
LABORERS, NON BAT/JATC															
OTHER SKILLS															
TOTAL															

NUMBER OF PROJECTS UNDER WAY DURING REPORTING PERIOD AND CONTAINING TRAINING SPECIAL PROVISIONS

NUMBER OF NEW HIRES	NUMBER OF UPGRADES
NUMBER IN APPRENTICESHIP TRAINING	NUMBER IN OTHER ON-JOB-TRAINING

REPORT PREPARED BY (SIGNATURE) AND TITLE OF STATE OFFICIAL	DATE

DOT FORM 272-061 5/87

Washington State
Department of Transportation

Federal-Aid Highway Construction Annual Project Training Report

See Instructions for assistance in completing this form.

Prime Contractor	Contract No.	Federal Aid No.

Subcontractor (if applicable)	Project Engineer	Region	Percent Training Complete As of

Reporting Period	No. of Trainees Assigned	Training Hours Assigned	*Ethnic Code: (B) Black (A) Asian (H) Hispanic (NA) Native American
June 1, _____ To May 31, _____			(O) Other (Specify) _____

1	2	3	4		5	6		7	8	9		10	11	
			Gender			New Hire				Apprentice		Training Hrs. Completed This Period	Training Complete	
Name (Last, First)	Social Security No.	Job Classification	Male	Female	*Ethnic Group	Yes	No	Hours Assigned	Trainee Start Date	Yes	No		Yes	No

Total Training Hours _____

Comments:

Report Prepared (Signature) _____ Title _____ Date _____

DOT Form 272-060 EF
Revised 9/97

Use Additional Sheets as Needed

Page _____ of _____

Washington State
Department of Transportation

ASPHALT CONCRETE PAVEMENT RANDOM SAMPLE WORK SHEET

Region	Date	Contract No.	SR No.	Gauge No.	Project Engineer

Section

Length of Control Lot

Note: Formula used for calculation: $L = \frac{1000}{RW}$

Where: L = Linear meters covered by one tonne of material
R = Rate of spread, kg/m^2
W = Width of spread, meters

Length of Pavement _____ Width = _____

Beginning Station _____ Ending Station _____

Use last 2 digits from todays standard count to enter the random number chart _____

(Refer to WSDOT Test Method No. 716, Construction Manual chapter 9)

(x value)		(length)			(y value)		(width)		
_____	X	_____	=	_____	_____	X	_____	=	_____
_____	X	_____	=	_____	_____	X	_____	=	_____
_____	X	_____	=	_____	_____	X	_____	=	_____
_____	X	_____	=	_____	_____	X	_____	=	_____
_____	X	_____	=	_____	_____	X	_____	=	_____

Beginning Station		Length		Test Station	Offset
_____	+	_____	=	_____	_____
_____	+	_____	=	_____	_____
_____	+	_____	=	_____	_____
_____	+	_____	=	_____	_____
_____	+	_____	=	_____	_____

INSPECTOR _____

DOT 421-026X Metric
Revised 5/95

Blank Page

Washington State Department of Transportation

Monthly Employment Utilization Report

WSDOT Contract Number	Federal Aid Number	Employer's I.D. Number	County		Federal Funding Agency

Name and Address of Contractor	Project Description and Location	Reporting Period	Current Goals
		From _____ To _____	Minority _____ Female _____

1. Construction Trade — **Total Federal and Non-Federal Construction Work Hours**

Construction Trade	Classifications	a. Total All Employees By Trade		b. Black (Not of Hispanic Origin)		c. Hispanic		d. Asian or Pacific Islander		e. American Indian or Alaskan Native		2. Minority Percentage	3. Female Percentage	4. Total Number of Employees		5. Total Number of Minority Employees	
		M	F	M	F	M	F	M	F	M	F			M	F	M	F
	Journey Worker																
	Apprentice																
	Trainee																
	Journey Worker																
	Apprentice																
	Trainee																
	Journey Worker																
	Apprentice																
	Trainee																
	Journey Worker																
	Apprentice																
	Trainee																
	Journey Worker																
	Apprentice																
	Trainee																
Total Journey Workers																	
Total Apprentices																	
Total Trainees																	
Grand Total																	

Company Official's Signature and Title	Telephone Number	Date Signed	Page ____ of ____

DOT Form 820-010

This form replaces U.S. Dept. of Labor Form CC 257

Instructions for Completing Monthly Employment Utilization Report (DOT Form 820-010)

The Monthly Utilization Report is to be completed by each subject contractor (both prime and sub) and signed by a responsible official of the company. The reports are to be filed by the 5th day of each month during the term of the contract, and they shall include the total work hours for each employee classification in each trade in the covered area for the monthly reporting period. The prime contractor shall submit a report for each Federally funded project and collect and submit reports for each subcontractor's work force on each project to the Project Engineer.

Compliance Agency	Washington State Department of Transportation or contracting agency responsible for Equal Employment Opportunity.
Contractor	Any contractor who has a construction contract with the Washington State Dept. of Transportation or a contract funded in whole or in part with Federal funds.
Minority	Includes Blacks, Hispanics, American Indians, Alaskan Natives, and Asian and Pacific Islanders - both men and women.
County	County in which contract work is performed.
Employer's Identification Number	Federal Social Security Number used on Employer's Quarterly Federal Tax Return (U.S. Treasury Department Form 941).
Current Goals (Minority & Female)	See Contract Notification.
Reporting Period	Monthly, or as directed by the Project Engineer, beginning with the effective date of the contract.
1. Construction Trade	Only those construction crafts which the contractor employs in the county.
Work-Hours of Employment (a - e)	a. The total number of male hours and total number of female hours worked by each specified group of minority employees in each classification. b. - e. The total number of male hours and the total number of female hours worked by each specified group of minority employees in each classification.
Classification	The level of accomplishment or status of the worker in the trade (Journey, Apprentice, or Trainee).
2. Minority Percentage	The percentage of total minority work hours of all work hours (the sum of columns b, c, d, and e divided by column a; just one figure for each construction trade).
3. Female Percentage	For each trade the number reported in a. F divided by the sum of the numbers reported in a. M and F.
4. Total Number of Employees	The total number of male and total number of female employees working in each classification of each trade on each project during the reporting period.
5. Total Number of Minority Employees	The total number of male minority employees and total number of female employees working in each classification of each trade on each project during the reporting period.

DOT Form 820-010 Instructions

Washington State
Department of Transportation

Concrete Acceptance of Slump and Air Price Adjustment

Date	Time	Contractor	
Truck Number	Pay Item	Unit Contract Price (U.P.)	Contract Number
Volume (V) CY (m^3)	4.5 Min. 7.0 Max (above ground) Air Tested %	High Range Water Reducer (HRWR) Used ☐ ☐	
Specified Slump Inches (mm)	Slump Tested Inches (mm)	Compressive Test Cylinder Number	

Pay Factors (P.F.)

Pay factors (P.F.) for adjusting the concrete price for acceptance due to air contentdeviation and excess slump.

Deviation From Specified % Air	Pay Factors	Maximum Slump Exceeded By	Pay Factors
Up to 0.3%	0.98	1/4 inches (6 mm)	0.98
0.3% - 0.5%	0.96	1/2 inches (13 mm)	0.96

All concrete with an air content less than 4% shall be rejected.

Products of Pay Factors (P.F.)

If deviations occur in the air content and slump within the same testing frequency quantity, the pay factor shall
be the product of the individual pay factors. The following table lists the product of pay factors to be used.

☐
☐
☐

Price Adjustment = U.P.[1/2 (1- P.F.)] V = Credit Amount

U.P. _____ [1/2 (1- P.F. _____)] V _____ = _____

Contractor's Representative
State Representative
State Tester

Form 350-567 EF

Washington State Department of Transportation

WASHINGTON STATE PATROL WSP

WSP Field Check List

Today's Date:

To be Completed by WSDOT Inspector

Contract No.	SR
Milepost From	To

	Begin WSP Shift	End WSP Shift
Date		
Time	:	:

Title	
Project Engineer	WSP Task Order No.
WSDOT Onsite Contact	Field Phone (include area code)
Traffic Control Strategy Meeting Location	Attended By
Traffic Control Strategy (*review with WSP officer*)	

To be Completed by WSP Officer - *Return Completed Form to WSDOT Inspector*

Percent of Time	Duties
	Assistance in traffic control setup and takedown (blue lights)
	Passive presence (yellow lights)
	Proactive patrol in work zone (blue lights)
	Ramp closures (yellow lights)
	Lane closure (yellow lights)
	Road closure (yellow lights)
	Detours (yellow lights)
	Other duties as outlined in Strategy Session (above)

Is a second officer needed for similar work in the future? ☐ ☐

Suggestions For Traffic Control Improvements (mandatory):

Total Violators Contacted	No. of Accidents Within Work Zone
WSP Officer Name	WSP Badge No.

DOT Form 421-045 EF

Washington State
Department of Transportation

Report of Protested Work

Contract Number	Date	Location of Work

Prime Contractor	Subcontractor / Lower Tier Subcontractor	Other

Description of Work Performed and Why Protested

Time Worked Record

	Workers and/or Equipment Working	Occupation of Workers or Equipment Size	Labor		Equipment	
			Regular	Overtime	Operated	Standby
1						
2						
3						
4						
5						
6						
7						
8						
9						
10						
11						
12						
13						
14						
15						
16						
17						
18						
19						
20						

This form is for the sole purpose of documenting the use of labor, equipment, and materials on work protested under Section 1-04.5 and 1-09.11 of the Standard Specifications.

Inspector	Contractor's Representative	Title

DOT Form 422-007 EF
Revised 3/98

A

Acceptance of concrete, 6-8
Acceptance samples and tests, 9-1
Acid soil/alkaline soil, 8-3
Admixtures, 9-29
Advisory speed, 1-24
Aeration, 2-6
Aerial photographs, 2-12
Affidavit of wages paid, 1-48
Aggregates for asphalt concrete and asphalt treated base, 9-13
Air entraining admixtures and water reducing admixtures, 9-29
Alignment, 1-67
Anchor bolts, 6-28, 9-19, 9-31
Anchor bolts for luminaire, signal poles, and sign structures, 9-31
Approval of materials, 9-6
Archaeological and paleontological salvage, 1-6
As-built plans, 8-19, 10-11
Asphalt concrete and asphalt treated base, 9-13
Asphalt concrete pavement, 5-6
Asphalt treated base, 4-4
Assistant Secretary for Field Operations, 1-1
Assurance samples testing, 9-43
Authority of the Project Engineer, 1-55
Award and execution of contract, 1-7

B

Backfill, 7-3, 9-14
Backflow, 8-15
Ballast and crushed surfacing, 4-1
Balled and burlapped, 8-3
Bank run gravel, 9-14
Bare root, 8-4
Barrier, 6-16
Basis for acceptance, 9-37
Beam guardrail, guardrail anchors, and glare screen, 9-27
Bearing values, 6-2, 6-34
Bedding, 7-3
Bituminous materials, 9-11
Bituminous surface treatment, 5-1
Bolts, 9-19
Borrow pits, 2-9
Bridge approach slab anchors, 9-21
Bridge deck construction, 6-9
Bridge rail, 9-34
Bridge railings, 6-38
Bulk specific gravity, 6-40

C

Calendar cutoff dates, 5-7
Caliper, 8-4
Cane, 8-4
Cast-in-place concrete piling, 6-34
Castings, 9-17, 9-18
Catch basins, 7-5, 9-23
CCIS, 1-25
Cement concrete pavement, 5-20
Chain link fence, 8-16
Change order - checklist, 1-35
Change order executed by ferries, 1-32
Change order executed by regions, 1-32
Change order executed by the Olympia Service Center, 1-32
Changed conditions, 1-40
Changes in the work, 1-25
Channel excavation, 2-15
Claims, 1-65
Cleaning metal, 6-39
Clearing, 2-1, 8-16
Clearing and grubbing - combined, 2-1
Clearing the site, 6-2
Coast Guard, 1-14
Cofferdams, 2-14
Compaction, 2-6, 4-2, 5-15
Compaction control, 5-18
Compression seals, 9-15
Concrete, 9-34
Concrete aggregates, 9-12
Concrete culvert, sewer, drain, and underdrain pipe, 9-16
Concrete curing compounds, 9-28
Concrete pipe acceptance report, 9-9
Concrete seals and cofferdams, 6-13

Concrete structures, 6-4, 6-14
Conduit, 8-19, 8-20, 9-30
Construction and maintenance of detours, 1-21
Construction Contracts Information System, 1-25
Construction Engineer, Administration, 1-2
Construction Engineer, Bridges, 1-2
Construction Engineer, Roadway, 1-2
Construction geotextiles, 9-34
Construction joints, 5-25
Construction signs, 1-22
Construction staking, 1-67
Construction surveying, 1-67
Construction work in international boundary strip, 1-7
Contract time, 1-41
Contraction joints, 5-25
Contractor furnished material sources, 3-3
Contractor furnished sources, 3-5
Contractor surveying, 1-67
Contractor-WSDOT relationships, 1-8
Contractor's equipment, personnel, and operations, 1-55
Control of materials, 9-10, 9-36
Control of work, 1-55
Controlled blasting, 2-3
Conversion factors, 10-3
Coordinating work with other contracts, 1-16
Course thicknesses, 1-68
Credit, 3-3
Credits, 1-60
Cross-connection control, 8-15
Crushed, 3-1
Crushing, 3-1
Culverts, 7-1, 7-2, 7-4, 9-16
Curing, 5-24
Curing concrete, 6-12

D

Daily compaction reports, 2-8
Defective materials, 1-56
Defective or unauthorized materials or work, 1-56
Definition of terms, 1-1
Density, 5-16
Density tests, 4-2
Deputy Secretary for Operations, 1-1
Detours, 1-21
Direct tension indicator method, 6-29, 6-30
Disputes and claims, 1-65
Ditch, 2-15
Dowels and tiebars for concrete pavement, 9-20
Drain pipe, 9-16
Drains, 7-1
Duct, 6-22
Duties before construction begins, 5-5
Duties before paving begins, 5-10
Duties during paving operations, 5-12

E

Earth embankments, 2-9
Earthwork quantities, 2-12
Elastomeric bearing pads, 9-33
Electrical conductors, 9-31
Embankment construction, 2-6
Embankment foundations, 2-5
Enforcement of wage rate requirements, 1-48
Environmental considerations, 1-18
Epoxy coated reinforcing steel bars for concrete, 9-20
Epoxy resins, 6-11
Equipment for testing, 9-55
Equitable adjustment, 1-29
Erection of steel, 6-28
Erosion control, 2-10
Erosion of slopes, 2-5
Estimates and records, 1-58
Evaluation of independent assurance samples testing, 9-43
Excavation, 2-3
Expansion dams, 6-3, 6-32
Expansion joints, 9-35

F

Fabric bearings pad, 9-33
Falsework, 6-4
Federal Highway Administration, 1-5
Fencing, 9-26
Fertilizer, 8-4, 8-11, 9-25
Field notes, 10-1
Final cleanup, 6-4
Final estimates - Olympia Service Center, 1-62
Final estimates - regions, 1-62
Final records, 10-8
Finishing, 6-11
Flaggers, 1-23

Flow line, 7-2
Fly ash, 6-4
Force account, 1-36
Form letters, 9-1
Foundations, 6-1
Frequency of testing, 9-36

G

Gabion baskets, 9-30
Galvanized steel, aluminized steel and aluminum currugated metal culvert, drain pipe and perforated underdrain pipe, 9-16
Genus, 8-4
Geotextiles, 9-34
Girders, 6-19, 6-20
Gravel backfill for foundations, 7-3
Gravel backfill for pipe zone bedding, 7-3
Gravel backfill for walls, 2-15
Gravel base, 4-1, 9-14
Gravel borrow, 2-7, 9-14
Grubbing, 2-1
Guardrail, 8-16, 9-27
Guardrail posts and blocks, 9-27
Guidelines for job site control of materials, 9-36

H

Handling and storing material, 6-28
Haul, 2-12
Herbicide, 8-5
High strength bolts, nuts and washers, 9-19
High-strength bolts, 6-29
Hollow steel piling and jack vasing, 9-23
Hot plant inspection, 5-8

I

Illumination, 8-17
Independent assurance program, 9-38
Inlets, 9-23
Inspection and sampling of materials, 5-4
Inspection during mixing operations, 5-9
Inspection during planting, 8-9
Inspection of bituminous surface treatment, Class A, 5-2
Inspection of bituminous surface treatment, Classes B, C, and D, 5-3
Inspection of concrete production facilities, 6-6
Inspection of mixing plant, 5-8
Inspection of planting, 8-6
Inspection of trucks, 6-6
Inspection tools, 5-10
Inspector’s daily report, 10-10
Inspector’s duties, 3-2
Inspector’s record of field tests, 3-1
Inventory inspection, 6-4
Irrigation, 8-11
Irrigation system, 8-13, 9-26
Item quantity ticket, 10-2

J

Joint filler, 9-15
Joints, 5-25
Junction boxes, 8-19

K

Keystone, 4-3

L

Landscape, 8-3
Layout, 6-27
Lighting standards, 8-20
Local agencies, 1-5
Luminaires and lamps, 9-32

M

Manholes, 7-5, 9-23
Manufacturer’s certificate of compliance, 9-8
Material acceptance, 1-57
Material on hand, 1-59
Materials, 1-5
Materials Engineer, 1-5
Maximum density, 2-7, 9-41
Measure, 10-6
Mechanical splices, 9-20
Metal culvert, 9-16
Mineral filler, 9-14
Miscellaneous deduction, 1-60
Miscellaneous duties of the street inspector, 5-18
Miscellaneous inspection duties, 5-4
Mix design, 5-19, 6-4
Mixing, 5-21
Moisture content, 2-7
Monuments, 1-67
Mudsills, 6-3
Mulch, 8-5, 9-25

N

Notes, 10-1
Nuclear density gauges, 9-53

O

One-way piloted traffic control through construction zones, 1-20
Opening to traffic, 5-26
Optimum moisture, 2-8
Order, 1-43
Order list, 1-25, 6-34
Overbreak, 2-4
Overburden, 3-2
Overrun of plan quantity, 1-26

P

Painting, 6-33, 6-38
Paints for structures, 9-22
Paving equipment, 5-11
Payment for falsework, 1-59
Payment for shoring or extra excavation, 1-60
Payment for surplus processed material, 1-60
Payroll, 1-49
Pedestrian safety, 1-18
Perforated underdrain pipe, 9-17
Performance reports, 1-58
Pesticide, 8-5
Photogrammetry, 2-12
Pier, column, and wall concrete, 6-14
Pile driving records, 6-38
Piling, 6-33, 9-23
Pipe, 9-16
Pipe arch, 7-4
Pipe zone bedding, 9-14
Pit, 3-1
Pit evaluation report, 3-3
Pit operations, 3-2
Pit run aggregates, 9-14
Placement, 6-8
Placing concrete roadway slab, 6-32
Plant establishment, 8-12
Plant inspector, 5-9
Plant inspector's checklist, 5-8
Plant material, 8-11, 9-24
Planting, 8-2
Plastic waterstop, 9-29
Point of acceptance, 6-9
Portland Cement, 9-11
Post-tensioned bridges, 6-22
Post-tensioning record, 6-24
Post-tensioning reinforcement, 9-21
Posters, 1-18
Poured joint sealant, 9-15
Precast concrete barrier, 9-33
Precast concrete catch basins, manholes, and inlets, 9-23
Precast concrete piling, 6-34
Preconstruction meetings, 1-8
Preleveling, 5-11
Preliminary samples and tests, 9-1
Preparation of untreated roadway, 5-12
Prestressed concrete, 9-28
Prestressed concrete products, 6-20, 9-28
Production, 3-1
Progress estimates, 1-58
Progress schedule, 8-11
Project documentation reviews, 10-15
Project Engineer's relationship and responsibilities, 1-13
Project ledger system, 10-14
Proportioning and mixing concrete, 6-4
Protest, 1-64
Pruning, 8-10
Public convenience and safety, 1-19

Q

Quantity details, 10-2
Quarry, 3-1

R

Radiation Administration Officer, 9-54
Radiation Safety Officer, 9-54
Radioactive testing devices, 9-53
Railings, 6-38
Railroad agreements, 1-16, 1-61
Railroad encroachment insurance, 1-16
Railroad flagging, 1-61
Raised pavement markers, Types 1, 2, and 3, 9-28
Record, 10-11
Record of materials, 9-5
Records of construction signing, accidents and surveillance, 1-24
Regional Construction Manager, 1-5
Reinforcing bars for concrete, 9-19
Reinforcing steel, 6-17

Relationship with other agencies, 1-5
Relationship with public and private utilities, 1-16
Relationship with the contractor, 1-14
Relief of responsibility for maintenance and third party damages, 1-41
Removal of structures and obstructions, 2-2
Reports and records, 5-4
Request for approval of material, 9-6
Request to sublet, 1-40
Required contract provisions for federal-aid construction contracts, 1-49
Required tests, 5-7
Resins, 9-29
Responsibility as a public official, 1-13
Responsibility of the street inspector, 5-10
Retained percentage, 1-63
Roadside cleanup, 2-1, 2-2
Roadway excavation and embankment, 2-2
Rock embankments, 2-9
Rollers, 5-16
Rust, 6-39

S

Safety, 1-6
Safety bars, 9-34
Safety nets and staging, 6-3
Safety tags, 8-20
Sales tax, 1-38
Sampling and testing for small quantities of materials, 9-36
Sampling and testing schedule, 9-36
Sand equivalent test, 3-1
Sanitary sewers, 9-18
Scales, 10-5, 10-6
Scalping, 3-2
Scour, 6-1
Screen analysis for gradation, 3-1
Seal coat, 5-3
Seals, 6-13
Secretary of Transportation, 1-1
Seed, 9-25
Seed and fertilizer, 8-2
Seeded, 8-2
Segregation, 3-2, 6-7
Setting anchor bolts and masonry plates, 6-28
Settlement indicating devices, 2-6
Sewers, 7-4
Shear keys, 6-7
Shop drawings, 8-17
Shop inspection of prestressed concrete products, 6-20
Shop plans and working drawings, 1-41
Shoring and cribbing, 7-5
Sidewalks, 8-16
Sign posts, 9-34
Sign structures, 9-31
Signal, luminaire, and strain poles, 9-31
Significant decimal places, 10-2
Signing, 8-21
Site reclamation, 3-5
Slides, 2-5
Slipform, 6-16
Slope protection, 9-24
Slope treatment, 2-13
Slump, 6-9, 9-35
Small quantities, 9-36, 10-4
Solid rock, 2-3
Specific gravity, 3-3, 9-57
Specific requirements for each material, 9-10
Speed limits, 1-24
Speedy moisture tester, 2-8
Splices, 6-17
Spreading and finishing, 5-14
State Construction Engineer, 1-2
Statement of materials and labor, 1-58
Steel for bridges, 9-18
Steel piling, 6-34
Steel structures, 6-27
Stockpiling, 3-4
Straightening bent material, 6-28
Street inspector’s checklist, 5-10
Stress absorbing membranes, 5-5
Strippings, 3-1
Structural plate pipe, pipe arch, and underpass, 7-4
Structural plate pipes and arches, 9-17
Structural timber and lumber - untreated, 9-22
Structure excavation, 2-14
Structures, general requirements, 6-1
Subcontractors and lower tier subcontractors, 1-8
Subgrade preparation, 2-13
Subletting portions of the contract, 1-40
Supplemental final estimates, 1-63
Surface Mining Act, 3-5
Surface smoothness, 5-15
Surfacing aggregates, 9-13
Surplus processed material, 1-60
Suspension of work and delay, 1-43

T

Tack coat, 5-12
Temporary water pollution/erosion control, 2-10
Tendon, 6-22
Termination of contract, 1-40
Test borings, 6-1
Test cylinders, 6-13
Test methods for materials, 9-56
Test numbering, 9-1
Test piles, 6-37
Test sections, 5-17
Testing equipment, 5-7, 5-26
Testing modules, 9-57
Third party damages, 1-61
Tie/dowel bars, 5-23
Timber, 9-22
Timber structures, 6-33
Tolerance limits, 9-45
Top soil, 8-1
Traffic control, 1-20, 1-23, 5-10
Traffic control plans, 1-21
Traffic signal systems, 8-20
Transportation Commission, 1-1
Treated timber piling, 6-33
Tremie, 6-13
Trimming and cleanup, 2-15
Turn-of-nut method, 6-30

U

Underground utilities, 1-16
Underrun of plan quantity, 1-26
Unfinished cement concrete pavement, 5-26
Unsuitable foundation, 2-6
Utility agreements, 1-66
Utility and railroad relocation, 1-66

V

Verification samples and tests, 9-1
Vibration, 6-7

W

Waste sites, 3-5
Water, 2-14
Water distribution system, 9-32
Water pipe, 9-26
Waterproofing, 6-40
Weather and temperature limits, 6-7
Weed control, 5-19
Weekly statement of working days, 1-42
Weep holes, 2-15
Weighing, 10-4
Welding of structural steel, 6-32
Welding reinforcing steel, 6-19
Wire fence, 8-16
Wire reinforcement for concrete, 9-21
Wiring, 8-19
Working day charges, 1-42
Working in water, 6-3
WSDOT furnished material sources, 3-2
WSDOT furnished sources, 3-5
WSDOT organization, 1-1